MC10ELT22, MC100ELT22

5V Dual TTL to Differential PECL Translator

The MC10ELT/100ELT22 is a dual TTL to differential PECL translator. Because PECL (Positive ECL) levels are used only +5 V and ground are required. The small outline 8-lead package and the low skew, dual gate design of the ELT22 makes it ideal for applications which require the translation of a clock and a data signal.

- 1.2 ns Typical Propagation Delay
- <300 ps Typical Output to Output Skew
- PNP TTL Inputs for Minimal Loading
- Flow Through Pinouts
- ESD Protection: >2 KV HBM, >200 V MM
- Operating Range: V_{CC}= 4.75 V to 5.25 V with GND= 0 V
- No Internal Input Pulldown Resistors
- Meets or Exceeds JEDEC Spec EIA/JESD78 IC Latchup Test
- Moisture Sensitivity Level 1
  For Additional Information, see Application Note AND8003/D
- Flammability Rating: UL–94 code V–0 @ 1/8”,
  Oxygen Index 28 to 34
- Transistor Count = 51 devices

ON Semiconductor™

http://onsemi.com

MARKING DIAGRAMS*

SO–8
D SUFFIX
CASE 751

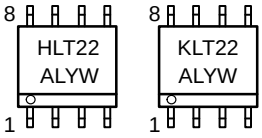

TSSOP–8
DT SUFFIX
CASE 948R

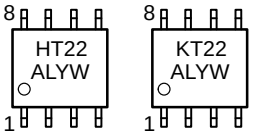

H = MC10
K = MC100
A = Assembly Location
L = Wafer Lot
Y = Year
W = Work Week

*For additional information, see Application Note AND8002/D

LOGIC DIAGRAM AND PINOUT ASSIGNMENT

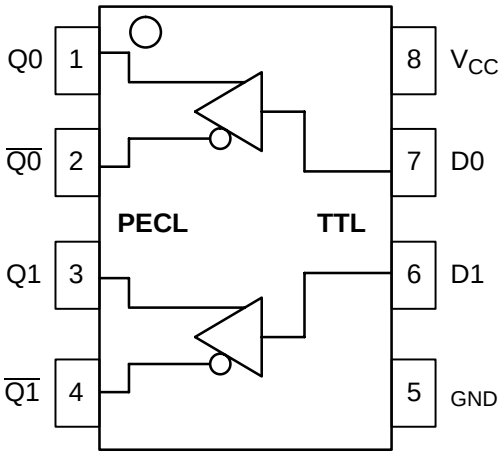

PIN DESCRIPTION

PIN	FUNCTION
Qn, $\overline{Qn}$	PECL Differential Outputs*
Dn	TTL Inputs
V_{CC}	Positive Supply
GND	Ground

* Output state undetermined when inputs are open.

ORDERING INFORMATION

Device	Package	Shipping
MC10ELT22D	SO–8	98 Units/Rail
MC10ELT22DR2	SO–8	2500 Tape & Reel
MC100ELT22D	SO–8	98 Units/Rail
MC100ELT22DR2	SO–8	2500 Tape & Reel
MC10ELT22DT	TSSOP–8	98 Units/Rail
MC10ELT22DTR2	TSSOP–8	2500 Tape & Reel
MC100ELT22DT	TSSOP–8	98 Units/Rail
MC100ELT22DTR2	TSSOP–8	2500 Tape & Reel

October, 2000 – Rev. 4
Publication Order Number:
MC10ELT22/D

MAXIMUM RATINGS (Note 1.)

Symbol	Parameter	Condition 1	Condition 2	Rating	Units
V_{CC}	Positive Power Supply	GND = 0 V		7	V
V_{IN}	Input Voltage	GND = 0 V	$V_I \leq V_{CC}$	7	V
I_{out}	Output Current	Continuous Surge		50 100	mA mA
TA	Operating Temperature Range			–40 to +85	°C
T_{stg}	Storage Temperature Range			–65 to +150	°C
θ_{JA}	Thermal Resistance (Junction to Ambient)	0 LFPM 500 LFPM	8 SOIC 8 SOIC	190 130	°C/W °C/W
θ_{JC}	Thermal Resistance (Junction to Case)	std bd	8 SOIC	41 to 44	°C/W
θ_{JA}	Thermal Resistance (Junction to Ambient)	0 LFPM 500 LFPM	8 TSSOP 8 TSSOP	185 140	°C/W °C/W
θ_{JC}	Thermal Resistance (Junction to Case)	std bd	8 TSSOP	41 to 44 ± 5%	°C/W
T_{sol}	Wave Solder	<2 to 3 sec @ 248°C		265	°C

1. Maximum Ratings are those values beyond which device damage may occur.

10ELT SERIES PECL DC CHARACTERISTICS V_{CC} = 5.0 V; GND = 0.0 V (Note 1.)

Symbol	Characteristic	–40°C			25°C			85°C			Unit
		Min	Typ	Max	Min	Typ	Max	Min	Typ	Max	
I_{CC}	Power Supply Current			22			22			22	mA
V_{OH}	Output HIGH Voltage (Note 2.)	3920	4010	4110	4020	4105	4190	4090	4185	4280	mV
V_{OL}	Output LOW Voltage (Note 2.)	3050	3200	3350	3050	3210	3370	3050	3227	3405	mV

NOTE: Devices are designed to meet the DC specifications shown in the above table, after thermal equilibrium has been established. The circuit is in a test socket or mounted on a printed circuit board and transverse air flow greater than 500 lfpm is maintained.

1. Output parameters vary 1:1 with V_{CC}. V_{CC} can vary ± 0.25 V.
2. Outputs are terminated through a 50 ohm resistor to V_{CC}–2 volts.

100ELT SERIES PECL DC CHARACTERISTICS V_{CC} = 5.0 V; GND = 0.0 V (Note 1.)

Symbol	Characteristic	–40°C			25°C			85°C			Unit
		Min	Typ	Max	Min	Typ	Max	Min	Typ	Max	
I_{CC}	Power Supply Current			22			22			22	mA
V_{OH}	Output HIGH Voltage (Note 2.)	3915	3995	4120	3975	4045	4120	3975	4050	4120	mV
V_{OL}	Output LOW Voltage (Note 2.)	3170	3305	3445	3190	3295	3380	3190	3295	3380	mV

NOTE: Devices are designed to meet the DC specifications shown in the above table, after thermal equilibrium has been established. The circuit is in a test socket or mounted on a printed circuit board and transverse air flow greater than 500 lfpm is maintained.

1. Output parameters vary 1:1 with V_{CC}. V_{CC} can vary ± 0.25 V.
2. Outputs are terminated through a 50 ohm resistor to V_{CC}–2 volts.

TTL INPUT DC CHARACTERISTICS V_{CC} = 4.75 V to 5.25 V; T_A = –40°C to 85°C

Symbol	Characteristic	Condition	Min	Typ	Max	Unit
I_{IH}	Input HIGH Current	V_{IN} = 2.7 V			20	μA
I_{IHH}	Input HIGH Current	V_{IN} = 7.0 V			100	μA
I_{IL}	Input LOW Current	V_{IN} = 0.5 V			–0.6	mA
V_{IK}	Input Clamp Diode Voltage	I_{IN} = –18 mA			–1.2	V
V_{IH}	Input HIGH Voltage		2.0			V
V_{IL}	Input LOW Voltage				0.8	V

AC CHARACTERISTICS V_{CC}= 4.75 V to 5.25 V; GND= 0.0 V

Symbol	Characteristic	–40°C			25°C			85°C			Unit
		Min	Typ	Max	Min	Typ	Max	Min	Typ	Max	
f_{MAX}	Maximum Input Frequency	100			100			100			MHz
t_{PLH}	Propagation Delay (Note 1.) 1.5 V to 50%	0.6		1.2	0.9	1.2	1.5	0.6		1.35	ns
t_{PHL}	Propagation Delay (Note 1.) 1.5 V to 50%	0.4		1.0	0.5	0.8	1.1	0.7		1.30	ns
t_{JITTER}	Cycle–to–Cycle Jitter			TBD	TBD			TBD			ps
t_r/t_f	Output Rise/Fall Time (20–80%)	0.4		1.6	0.4		1.6	0.4		1.6	ns

1. Specifications for standard TTL input signal.

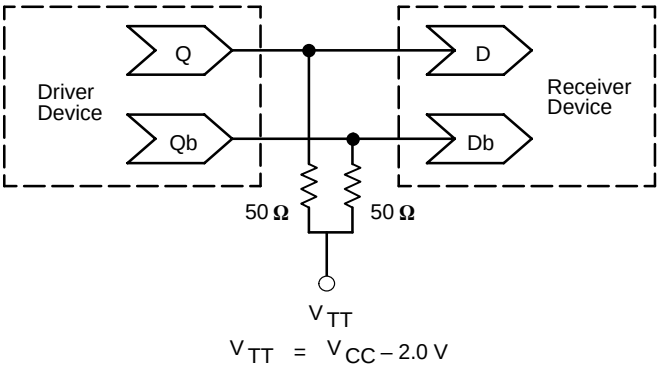

Figure 1. Typical Termination for Output Driver and Device Evaluation (See Application Note AND8020 – Termination of ECL Logic Devices.)

Resource Reference of Application Notes

AN1400	–	MC10/100H640 Clock Driver Family I/O SPICE Modeling Kit
AN1404	–	ECLinPS Circuit Performance at Non–Standard V_{IH} Levels
AN1405	–	ECL Clock Distribution Techniques
AN1406	–	Designing with PECL (ECL at +5.0 V)
AN1503	–	ECLinPS I/O SPICE Modeling Kit
AN1504	–	Metastability and the ECLinPS Family
AN1560	–	Low Voltage ECLinPS SPICE Modeling Kit
AN1568	–	Interfacing Between LVDS and ECL
AN1596	–	ECLinPS Lite Translator ELT Family SPICE I/O Model Kit
AN1650	–	Using Wire–OR Ties in ECLinPS Designs
AN1672	–	The ECL Translator Guide
AND8001	–	Odd Number Counters Design
AND8002	–	Marking and Date Codes
AND8020	–	Termination of ECL Logic Devices

PACKAGE DIMENSIONS

SO–8
D SUFFIX
PLASTIC SOIC PACKAGE
CASE 751–07
ISSUE V

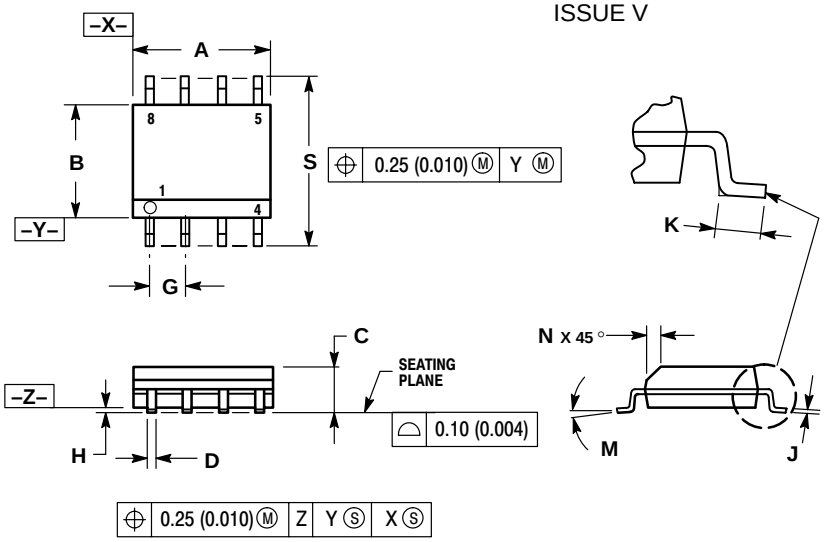

NOTES:
1. DIMENSIONING AND TOLERANCING PER ANSI Y14.5M, 1982.
2. CONTROLLING DIMENSION: MILLIMETER.
3. DIMENSION A AND B DO NOT INCLUDE MOLD PROTRUSION.
4. MAXIMUM MOLD PROTRUSION 0.15 (0.006) PER SIDE.
5. DIMENSION D DOES NOT INCLUDE DAMBAR PROTRUSION. ALLOWABLE DAMBAR PROTRUSION SHALL BE 0.127 (0.005) TOTAL IN EXCESS OF THE D DIMENSION AT MAXIMUM MATERIAL CONDITION.

	MILLIMETERS		INCHES	
DIM	MIN	MAX	MIN	MAX
A	4.80	5.00	0.189	0.197
B	3.80	4.00	0.150	0.157
C	1.35	1.75	0.053	0.069
D	0.33	0.51	0.013	0.020
G	1.27 BSC		0.050 BSC	
H	0.10	0.25	0.004	0.010
J	0.19	0.25	0.007	0.010
K	0.40	1.27	0.016	0.050
M	0 °	8 °	0 °	8 °
N	0.25	0.50	0.010	0.020
S	5.80	6.20	0.228	0.244

PACKAGE DIMENSIONS

TSSOP–8
DT SUFFIX
PLASTIC TSSOP PACKAGE
CASE 948R–02
ISSUE A

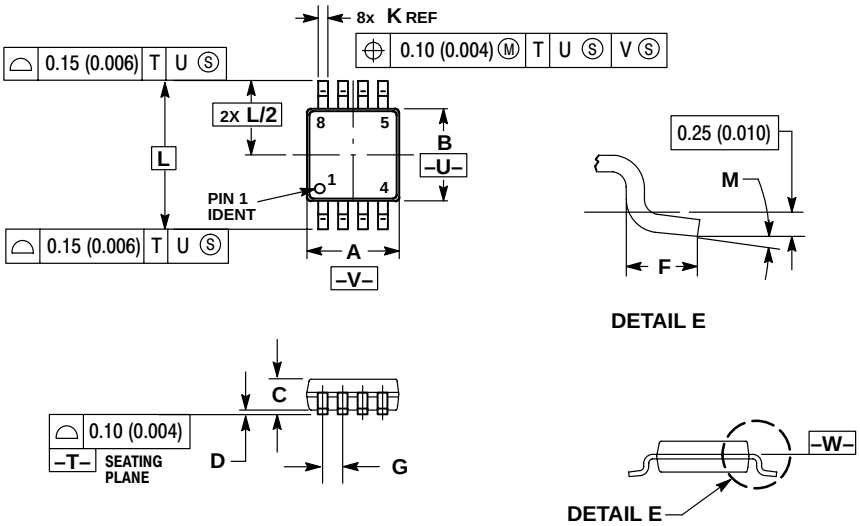

NOTES:
1. DIMENSIONING AND TOLERANCING PER ANSI Y14.5M, 1982.
2. CONTROLLING DIMENSION: MILLIMETER.
3. DIMENSION A DOES NOT INCLUDE MOLD FLASH. PROTRUSIONS OR GATE BURRS. MOLD FLASH OR GATE BURRS SHALL NOT EXCEED 0.15 (0.006) PER SIDE.
4. DIMENSION B DOES NOT INCLUDE INTERLEAD FLASH OR PROTRUSION. INTERLEAD FLASH OR PROTRUSION SHALL NOT EXCEED 0.25 (0.010) PER SIDE.
5. TERMINAL NUMBERS ARE SHOWN FOR REFERENCE ONLY.
6. DIMENSION A AND B ARE TO BE DETERMINED AT DATUM PLANE –W–.

	MILLIMETERS		INCHES	
DIM	MIN	MAX	MIN	MAX
A	2.90	3.10	0.114	0.122
B	2.90	3.10	0.114	0.122
C	0.80	1.10	0.031	0.043
D	0.05	0.15	0.002	0.006
F	0.40	0.70	0.016	0.028
G	0.65 BSC		0.026 BSC	
K	0.25	0.40	0.010	0.016
L	4.90 BSC		0.193 BSC	
M	0°	6°	0°	6°

Notes

PUBLICATION ORDERING INFORMATION

NORTH AMERICA Literature Fulfillment:
Literature Distribution Center for ON Semiconductor
P.O. Box 5163, Denver, Colorado 80217 USA
Phone: 303–675–2175 or 800–344–3860 Toll Free USA/Canada
Fax: 303–675–2176 or 800–344–3867 Toll Free USA/Canada
Email: ONlit@hibbertco.com
Fax Response Line: 303–675–2167 or 800–344–3810 Toll Free USA/Canada

N. American Technical Support: 800–282–9855 Toll Free USA/Canada

EUROPE: LDC for ON Semiconductor – European Support
German Phone: (+1) 303–308–7140 (Mon–Fri 2:30pm to 7:00pm CET)
Email: ONlit–german@hibbertco.com
French Phone: (+1) 303–308–7141 (Mon–Fri 2:00pm to 7:00pm CET)
Email: ONlit–french@hibbertco.com
English Phone: (+1) 303–308–7142 (Mon–Fri 12:00pm to 5:00pm GMT)
Email: ONlit@hibbertco.com

EUROPEAN TOLL–FREE ACCESS*: 00–800–4422–3781
*Available from Germany, France, Italy, UK, Ireland

CENTRAL/SOUTH AMERICA:
Spanish Phone: 303–308–7143 (Mon–Fri 8:00am to 5:00pm MST)
Email: ONlit–spanish@hibbertco.com
Toll–Free from Mexico: Dial 01–800–288–2872 for Access – then Dial 866–297–9322

ASIA/PACIFIC: LDC for ON Semiconductor – Asia Support
Phone: 303–675–2121 (Tue–Fri 9:00am to 1:00pm, Hong Kong Time)
Toll Free from Hong Kong & Singapore:
001–800–4422–3781
Email: ONlit–asia@hibbertco.com

JAPAN: ON Semiconductor, Japan Customer Focus Center
4–32–1 Nishi–Gotanda, Shinagawa–ku, Tokyo, Japan 141–0031
Phone: 81–3–5740–2700
Email: r14525@onsemi.com

ON Semiconductor Website: http://onsemi.com

For additional information, please contact your local Sales Representative.