MC78BC00 Series

Micropower Voltage Regulator

The MC78BC00 voltage regulators are specifically designed to be used with an external power transistor to deliver high current with high voltage accuracy and low quiescent current.

The MC78BC00 series are devices suitable for constructing regulators with ultra-low dropout voltage and output current in the range of several tens of mA to hundreds of mA. These devices have a chip enable function, which minimizes the standby mode current drain. Each of these devices contains a voltage reference unit, an error amplifier, a driver transistor and feedback resistors. These devices are available in the SOT-23, 5 pin surface mount packages.

These devices are ideally suited for battery powered equipment, and power sources for hand-held audio instruments, communication equipment and domestic appliances.

Features

- Ultra-Low Supply Current (50 μA)
- Standby Mode (0.2 μA)
- Ultra-Low Dropout Voltage (0.1 V with External Transistor and I_O = 100 mA)
- Excellent Line Regulation (Typically 0.1%/V)
- High Accuracy Output Voltage (±2.5%)

ORDERING INFORMATION

Device	Output Voltage	Operating Temperature Range	Package
MC78BC30NTR	3.0	T_A = -30° to +80°C	SOT-23
MC78BC31NTR	3.1		
MC78BC33NTR	3.3		
MC78BC40NTR	4.0		
MC78BC43NTR	4.3		
MC78BC45NTR	4.5		
MC78BC50NTR	5.0		

Other voltages from 2.0 to 6.0 V, in 0.1 V increments, are available. Consult factory for information.

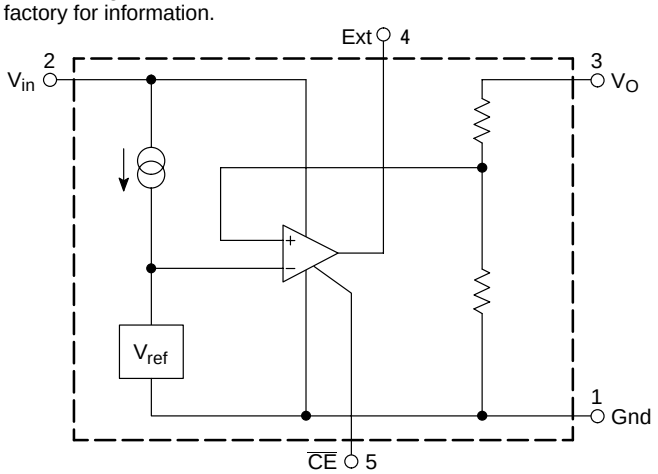

This device contains 13 active transistors.

Figure 1. Representative Block Diagram

ON Semiconductor®

http://onsemi.com

VOLTAGE REGULATOR WITH EXTERNAL POWER TRANSISTOR

SOT-23
N SUFFIX
PLASTIC PACKAGE
CASE 1212

MARKING DIAGRAM

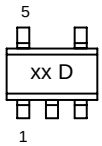

xx = MC78BC30NTR = K0
= MC78BC31NTR = K1
= MC78BC33NTR = K3
= MC78BC40NTR = L0
= MC78BC43NTR = L3
= MC78BC45NTR = L5
= MC78BC50NTR = M0
D = Date Code

PIN CONNECTIONS

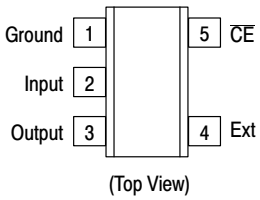

Standard Application

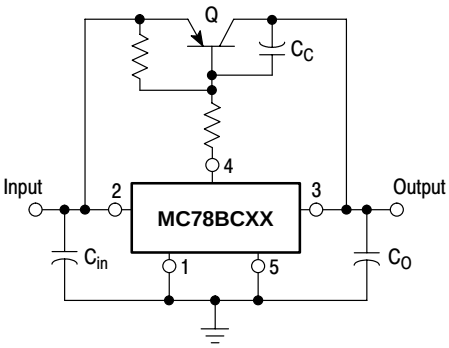

© Semiconductor Components Industries, LLC, 2003

MAXIMUM RATINGS (T_C = 25°C, unless otherwise noted.)

Rating	Symbol	Value	Unit
Input Voltage	V_{CC}	10	Vdc
Power Dissipation and Thermal Characteristics Maximum Power Dissipation Case 1212 (SOT-23) H Suffix Thermal Resistance, Junction-to-Ambient	 P_D R_{qJA}	 150 333	 mW °C/W
Operating Junction Temperature	T_J	125	°C
Operating Ambient Temperature	T_A	-30 to +80	°C
Storage Temperature Range	T_{stg}	-40 to +125	°C

NOTE: ESD data available upon request.

ELECTRICAL CHARACTERISTICS (V_{in} = V_O + 1.0 V, I_O = 50 mA, T_J = 25°C 9 (Note 1), unless otherwise noted.)

Characteristic	Symbol	Min	Typ	Max	Unit
Output Voltage MC78BC30NTR MC78BC31NTR MC78BC33NTR MC78BC40NTR MC78BC43NTR MC78BC45NT4 MC78BC50NTR	V_O	 2.925 3.023 3.218 3.900 4.193 4.386 4.875	 3.0 3.1 3.3 4.0 4.3 4.5 5.0	 3.075 3.178 3.382 4.100 4.408 4.613 5.125	V
Line Regulation V_O + 0.5 V ≤ V_{in} ≤ 8.0 V	Reg_{line}	0	0.1	0.3	mV
Load Regulation V_{in} - V_O = 1.0 V 1.0 mA ≤ I_O ≤ 100 mA	Reg_{load}	-	40	60	mV
Output Current (Note 2) V_{in} - V_O = 1.0 V	I_O	-	1000	-	mA
Dropout Voltage I_O = 100 mA	V_{in} - V_O	-	100	200	mV
Supply Current V_{in} = 8.0 V V_{in} - V_O = 1.0 V I_O = 0 (at no load)	I_{ss}	-	50	80	μA
Supply Current (Standby) V_{in} = 8.0 V	$I_{standby}$	0.1	0.2	1.0	μA
Ext Leakage Current	I_{LK}	-	-	0.5	μA
Chip Enable Input Logic Voltage Logic “0” (Regulator “On”) Logic “1” (Regulator “Off”)	V_{CE}	 0 1.5	 - -	 0.25 8.0	V
Chip Enable Input Current V_{CE} = 0.25 V V_{CE} = 1.5 V	I_{CEL}	 -5.0 -	 -3.0 -	 -0.1 0.1	μA
Output Voltage Temperature Coefficient	T_C	-	±100	-	ppm/°C

1. Low duty pulse techniques are used during test to maintain junction temperature as close to ambient as possible.
2. The output current depends upon the performance of External PNP Transistor. Use External PNP Transistor of a low saturation type, with an H_{FE} of 100 or more.

DEFINITIONS

Dropout Voltage - The input/output voltage differential at which the regulator output no longer maintains regulation against further reductions in input voltage. Measured when the output drops 100 mV below its nominal value (which is measured at 1.0 V differential), dropout voltage is affected by junction temperature, load current and minimum input supply requirements.

Line Regulation - The change in output voltage for a change in input voltage. The measurement is made under conditions of low dissipation or by using pulse techniques such that average chip temperature is not significantly affected.

Load Regulation - The change in output voltage for a change in load current at constant chip temperature.

Maximum Power Dissipation - The maximum total device dissipation for which the regulator will operate within specifications.

Supply Current - Current which is used to operate the regulator chip and is not delivered to the load.

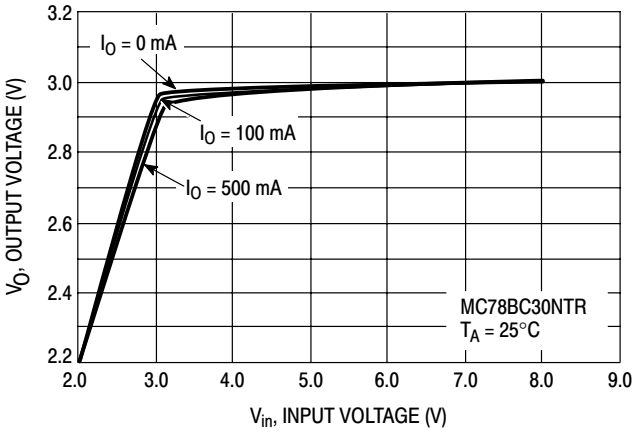

Figure 1. Output Voltage versus Input Voltage

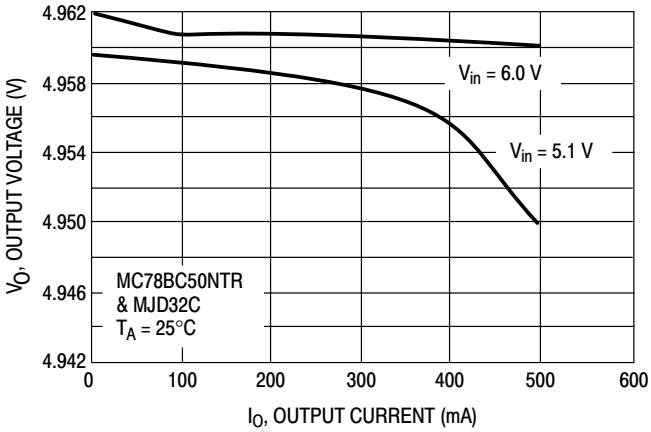

Figure 2. Output Voltage versus Output Current

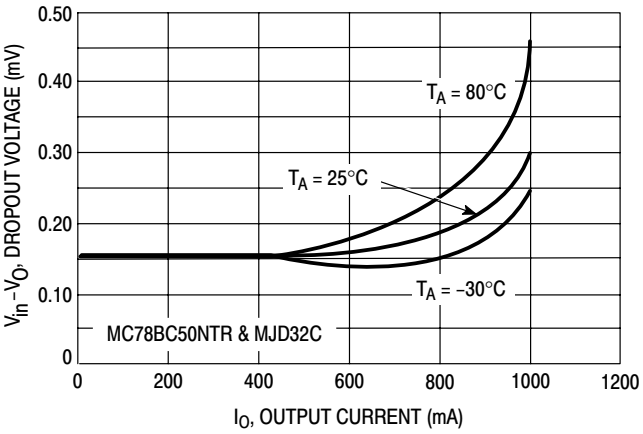

Figure 3. Dropout Voltage versus Output Current

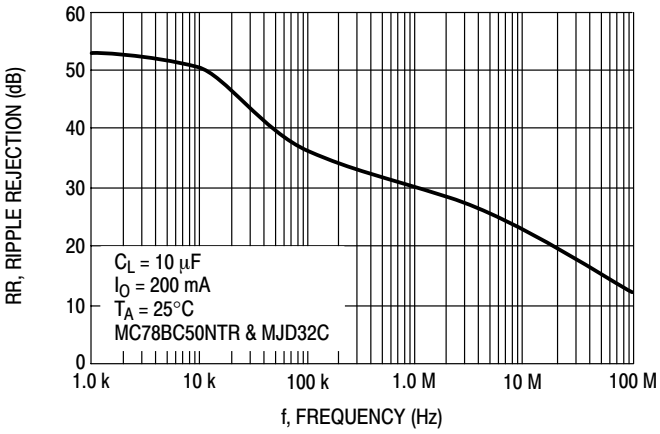

Figure 4. Ripple Rejection as a Function of Frequency

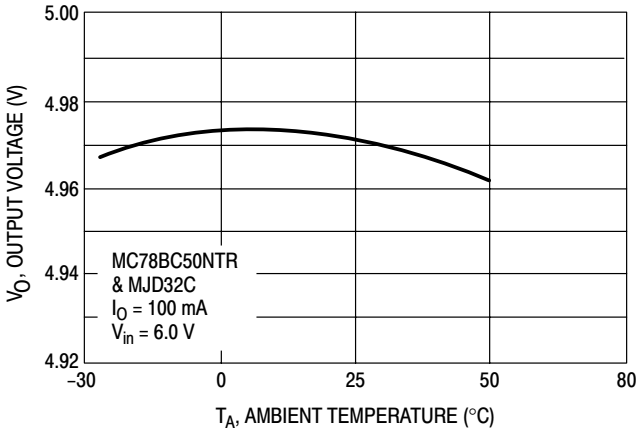

Figure 5. Output Voltage versus Temperature

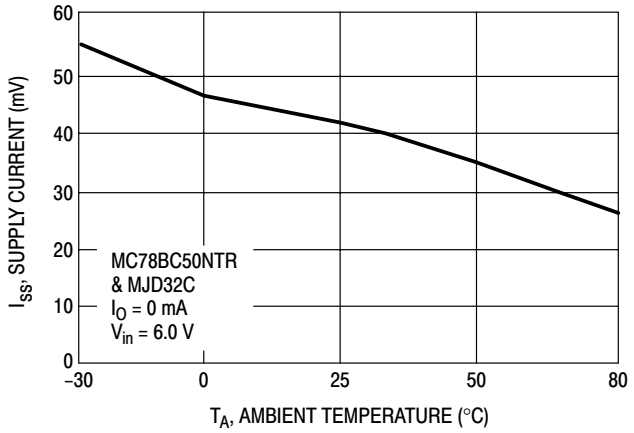

Figure 6. Supply Current versus Temperature

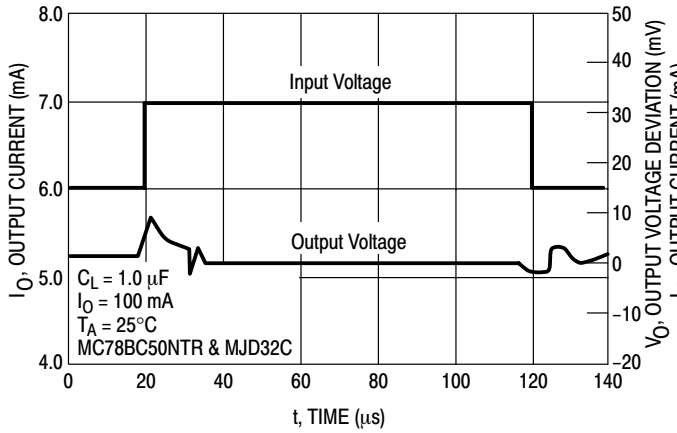

Figure 7. Line Transient Response

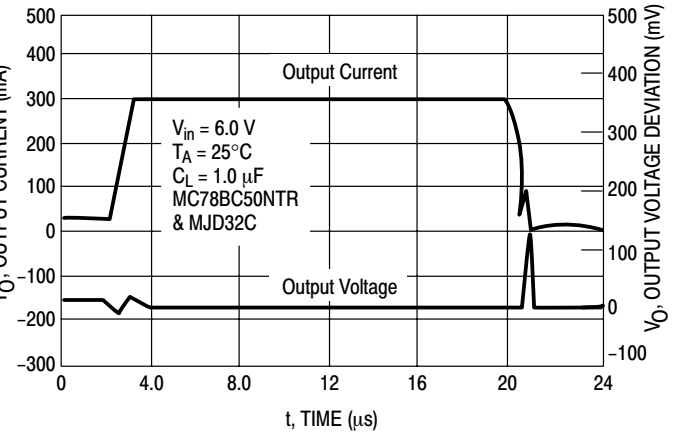

Figure 8. Load Transient Response

APPLICATIONS INFORMATION

Introduction

The MC78BC00 series of micropower voltage regulators are specifically designed for ultra-low dropout voltage and an output current which ranges from several tens of mA to several hundreds of mA making them ideal for battery-powered equipment. These regulators also have a chip enable function which minimizes supply current in stand-by mode. An input bypass capacitor is recommended if the regulator is located an appreciable distance (≥ 4 inches) from the input voltage source. These regulators require a 10 μF capacitance between the output terminal and ground for stability. Most types of aluminum, tantalum or multilayer ceramic will perform adequately. Solid tantalums or other appropriate capacitors are recommended for operation below 25°C. The bypass capacitors should be mounted with the shortest possible leads or track lengths directly across the regulator input and output terminals.

With economical electrolytic capacitors, cold temperature operation can pose a serious stability problem. As the electrolyte freezes, around -30°C, the capacitance will decrease and the equivalent series resistance (ESR) will increase drastically, causing the circuit to oscillate. Quality electrolytic capacitors with extended temperature ranges of -40° to +85°C are readily available. Solid tantalum capacitors may be the better choice if small size is a requirement. However, a maximum ESR limit of 3.0 Ω must be observed over temperature to maintain stability.

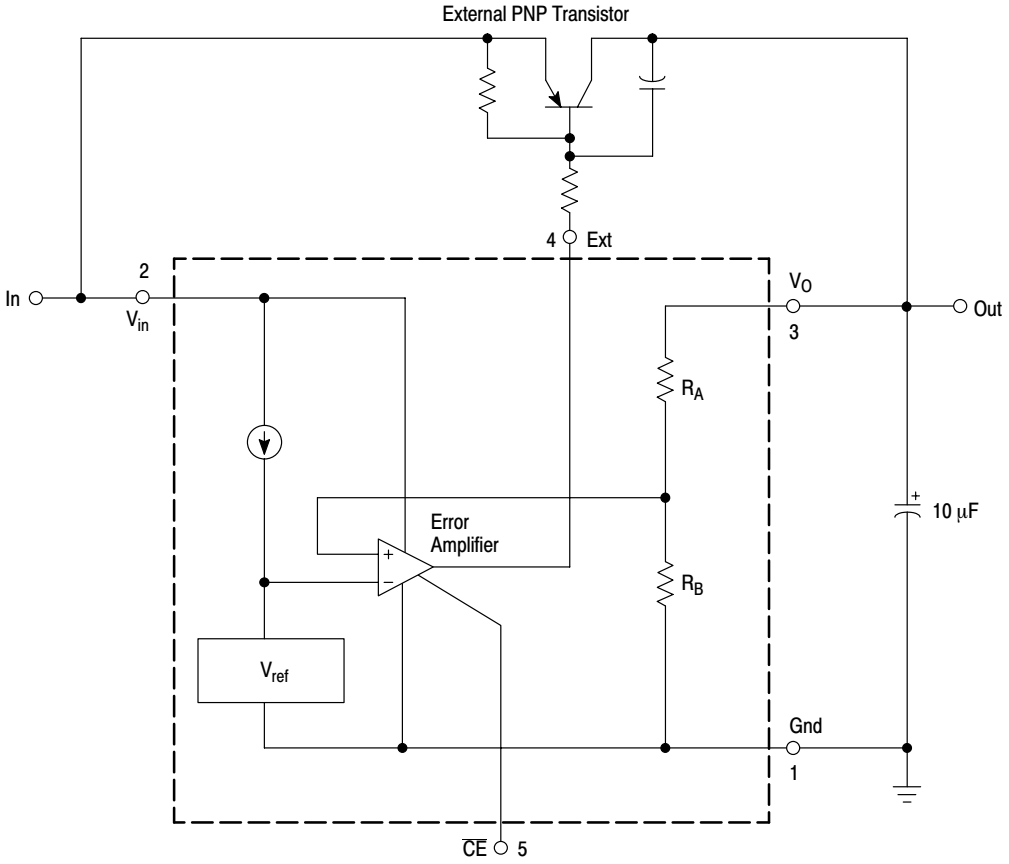

Figure 9. Typical Operation

External PNP Transistor

The external pin of this IC is protected by a current limit circuit from the destruction caused by excess current. The R2 resistor shown in Figure 10 is used for the protection of the external transistor, although this circuit can operate without the resistor. Resistor R2 should be determined via the input voltage, output voltage, output current, temperature and the H_{FE} of the external pass transistor.

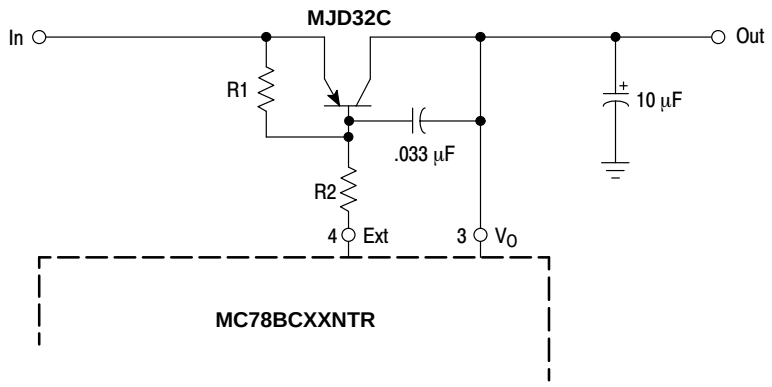

Figure 10. External PNP

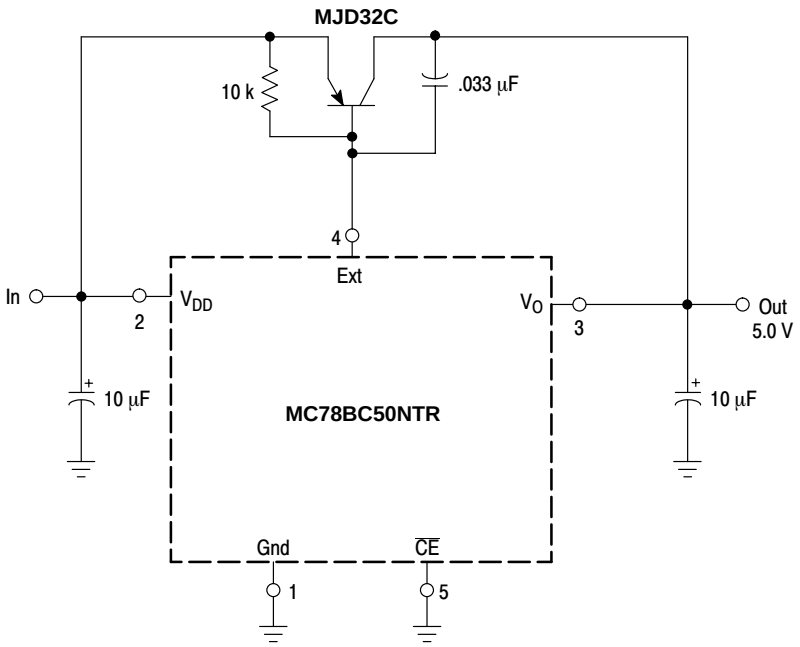

Figure 11. Typical Application

PACKAGE DIMENSIONS

N SUFFIX
PLASTIC PACKAGE
CASE 1212-01
(SOT-23)
ISSUE O

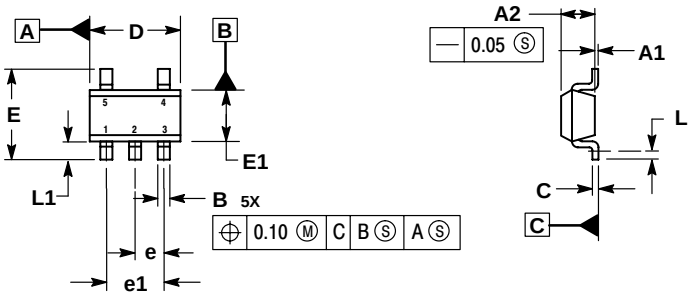

NOTES:
1. DIMENSIONS ARE IN MILLIMETERS.
2. INTERPRET DIMENSIONS AND TOLERANCES PER ASME Y14.5M, 1994.
3. DATUM C IS A SEATING PLANE.

	MILLIMETERS	
DIM	MIN	MAX
A1	0.00	0.10
A2	1.00	1.30
B	0.30	0.50
C	0.10	0.25
D	2.80	3.00
E	2.50	3.10
E1	1.50	1.80
e	0.95 BSC	
e1	1.90 BSC	
L	0.20	---
L1	0.45	0.75

ON Semiconductor and are registered trademarks of Semiconductor Components Industries, LLC (SCILLC). SCILLC reserves the right to make changes without further notice to any products herein. SCILLC makes no warranty, representation or guarantee regarding the suitability of its products for any particular purpose, nor does SCILLC assume any liability arising out of the application or use of any product or circuit, and specifically disclaims any and all liability, including without limitation special, consequential or incidental damages. "Typical" parameters which may be provided in SCILLC data sheets and/or specifications can and do vary in different applications and actual performance may vary over time. All operating parameters, including "Typicals" must be validated for each customer application by customer's technical experts. SCILLC does not convey any license under its patent rights nor the rights of others. SCILLC products are not designed, intended, or authorized for use as components in systems intended for surgical implant into the body, or other applications intended to support or sustain life, or for any other application in which the failure of the SCILLC product could create a situation where personal injury or death may occur. Should Buyer purchase or use SCILLC products for any such unintended or unauthorized application, Buyer shall indemnify and hold SCILLC and its officers, employees, subsidiaries, affiliates, and distributors harmless against all claims, costs, damages, and expenses, and reasonable attorney fees arising out of, directly or indirectly, any claim of personal injury or death associated with such unintended or unauthorized use, even if such claim alleges that SCILLC was negligent regarding the design or manufacture of the part. SCILLC is an Equal Opportunity/Affirmative Action Employer.

PUBLICATION ORDERING INFORMATION

Literature Fulfillment:
Literature Distribution Center for ON Semiconductor
P.O. Box 5163, Denver, Colorado 80217 USA
Phone: 303-675-2175 or 800-344-3860 Toll Free USA/Canada
Fax: 303-675-2176 or 800-344-3867 Toll Free USA/Canada
Email: ONlit@hibbertco.com

N. American Technical Support: 800-282-9855 Toll Free USA/Canada

JAPAN: ON Semiconductor, Japan Customer Focus Center
2-9-1 Kamimeguro, Meguro-ku, Tokyo, Japan 153-0051
Phone: 81-3-5773-3850
Email: r14525@onsemi.com

ON Semiconductor Website: http://onsemi.com

For additional information, please contact your local Sales Representative.