MC74HC374A

Octal 3-State Non-Inverting D Flip-Flop

High–Performance Silicon–Gate CMOS

The MC74HC374A is identical in pinout to the LS374. The device inputs are compatible with standard CMOS outputs; with pullup resistors, they are compatible with LSTTL outputs.

Data meeting the setup time is clocked to the outputs with the rising edge of the clock. The Output Enable input does not affect the states of the flip–flops, but when Output Enable is high, the outputs are forced to the high–impedance state; thus, data may be stored even when the outputs are not enabled.

The HC374A is identical in function to the HC574A which has the input pins on the opposite side of the package from the output. This device is similar in function to the HC534A which has inverting outputs.

- Output Drive Capability: 15 LSTTL Loads
- Outputs Directly Interface to CMOS, NMOS, and TTL
- Operating Voltage Range: 2.0 to 6.0 V
- Low Input Current: 1.0 μA
- High Noise Immunity Characteristic of CMOS Devices
- In Compliance with the Requirements Defined by JEDEC Standard No. 7A
- Chip Complexity: 266 FETs or 66.5 Equivalent Gates

LOGIC DIAGRAM

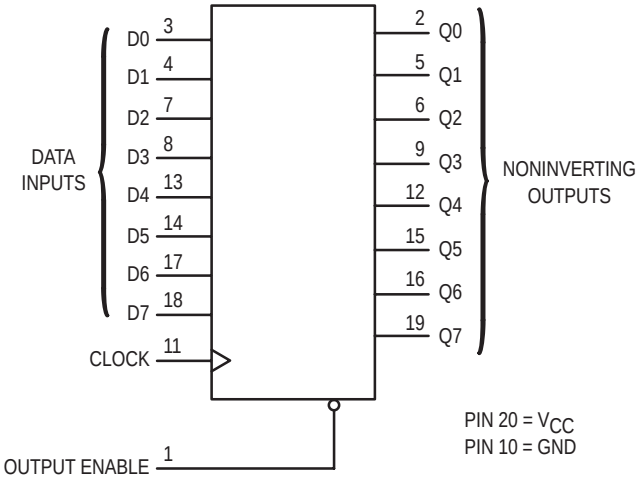

FUNCTION TABLE

Inputs			Output
Output Enable	Clock	D	Q
L	↑	H	H
L	↑	L	L
L	L,H,↓	X	No Change
H	X	X	Z

X = don't care
Z = high impedance

ON Semiconductor

http://onsemi.com

MARKING DIAGRAMS

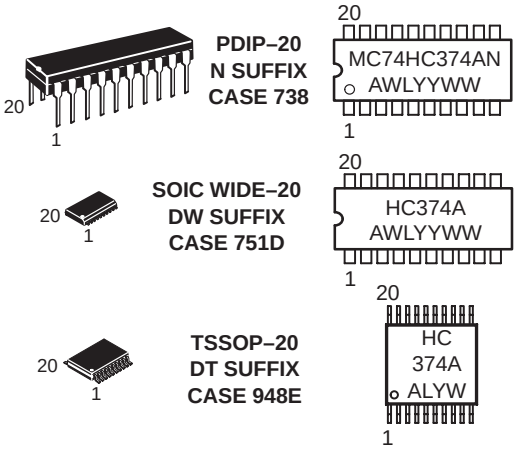

A = Assembly Location
WL = Wafer Lot
YY = Year
WW = Work Week

PIN ASSIGNMENT

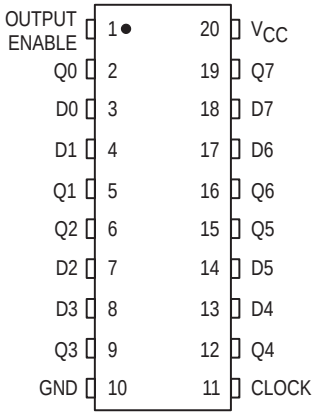

ORDERING INFORMATION

Device	Package	Shipping
MC74HC374AN	PDIP–20	1440 / Box
MC74HC374ADW	SOIC–WIDE	38 / Rail
MC74HC374ADWR2	SOIC–WIDE	1000 / Reel
MC74HC374ADT	TSSOP–20	75 / Rail
MC74HC374ADTR2	TSSOP–20	2500 / Reel

© Semiconductor Components Industries, LLC, 2000

May, 2000 – Rev. 9
Publication Order Number:
MC74HC374A/D

MAXIMUM RATINGS*

Symbol	Parameter	Value	Unit
V_{CC}	DC Supply Voltage (Referenced to GND)	– 0.5 to + 7.0	V
V_{in}	DC Input Voltage (Referenced to GND)	– 0.5 to V_{CC} + 0.5	V
V_{out}	DC Output Voltage (Referenced to GND)	– 0.5 to V_{CC} + 0.5	V
I_{in}	DC Input Current, per Pin	± 20	mA
I_{out}	DC Output Current, per Pin	± 35	mA
I_{CC}	DC Supply Current, V_{CC} and GND Pins	± 75	mA
P_D	Power Dissipation in Still Air, Plastic DIP† SOIC Package† TSSOP Package†	750 500 450	mW
T_{stg}	Storage Temperature	– 65 to + 150	°C
T_L	Lead Temperature, 1 mm from Case for 10 Seconds (Plastic DIP, SOIC, SSOP or TSSOP Package)	260	°C

This device contains protection circuitry to guard against damage due to high static voltages or electric fields. However, precautions must be taken to avoid applications of any voltage higher than maximum rated voltages to this high–impedance circuit. For proper operation, V_{in} and V_{out} should be constrained to the range GND ≤ (V_{in} or V_{out}) ≤ V_{CC}.

Unused inputs must always be tied to an appropriate logic voltage level (e.g., either GND or V_{CC}). Unused outputs must be left open.

*Maximum Ratings are those values beyond which damage to the device may occur.
Functional operation should be restricted to the Recommended Operating Conditions.
†Derating — Plastic DIP: – 10 mW/°C from 65° to 125°C
SOIC Package: – 7 mW/°C from 65° to 125°C
TSSOP Package: – 6.1 mW/°C from 65° to 125°C
For high frequency or heavy load considerations, see Chapter 2 of the ON Semiconductor High–Speed CMOS Data Book (DL129/D).

RECOMMENDED OPERATING CONDITIONS

Symbol	Parameter	Min	Max	Unit
V_{CC}	DC Supply Voltage (Referenced to GND)	2.0	6.0	V
V_{in}, V_{out}	DC Input Voltage, Output Voltage (Referenced to GND)	0	V_{CC}	V
T_A	Operating Temperature, All Package Types	– 55	+ 125	°C
t_r, t_f	Input Rise and Fall Time (Figure 1) V_{CC} = 2.0 V V_{CC} = 4.5 V V_{CC} = 6.0 V	0 0 0	1000 500 400	ns

DC ELECTRICAL CHARACTERISTICS (Voltages Referenced to GND)

Symbol	Parameter	Test Conditions	V_{CC} V	Guaranteed Limit – 55 to 25°C	≤ 85°C	≤ 125°C	Unit
V_{IH}	Minimum High–Level Input Voltage	V_{out} = 0.1 V or V_{CC} – 0.1 V $\|I_{out}\|$ ≤ 20 μA	2.0 3.0 4.5 6.0	1.50 2.10 3.15 4.20	1.50 2.10 3.15 4.20	1.50 2.10 3.15 4.20	V
V_{IL}	Maximum Low–Level Input Voltage	V_{out} = 0.1 V or V_{CC} – 0.1 V $\|I_{out}\|$ ≤ 20 μA	2.0 3.0 4.5 6.0	0.50 0.90 1.35 1.80	0.50 0.90 1.35 1.80	0.50 0.90 1.35 1.80	V
V_{OH}	Minimum High–Level Output Voltage	V_{in} = V_{IH} or V_{IL} $\|I_{out}\|$ ≤ 20 μA	2.0 4.5 6.0	1.90 4.40 5.90	1.90 4.40 5.90	1.90 4.40 5.90	V
		V_{in} = V_{IH} or V_{IL} $\|I_{out}\|$ ≤ 2.4 mA $\|I_{out}\|$ ≤ 6.0 mA $\|I_{out}\|$ ≤ 7.8 mA	3.0 4.5 6.0	2.48 2.98 5.48	2.34 3.84 5.34	2.20 3.70 5.20	V

DC ELECTRICAL CHARACTERISTICS (Voltages Referenced to GND)

Symbol	Parameter	Test Conditions	V_{CC} V	Guaranteed Limit – 55 to 25°C	≤ 85°C	≤ 125°C	Unit
V_{OL}	Maximum Low–Level Output Voltage	$V_{in} = V_{IH}$ or V_{IL} $\lvert I_{out}\rvert \le 20\ \mu A$	2.0 4.5 6.0	0.10 0.10 0.10	0.10 0.10 0.10	0.10 0.10 0.10	V
		$V_{in} = V_{IH}$ or V_{IL} $\lvert I_{out}\rvert \le 2.4$ mA $\lvert I_{out}\rvert \le 6.0$ mA $\lvert I_{out}\rvert \le 7.8$ mA	3.0 4.5 6.0	0.26 0.26 0.26	0.33 0.33 0.33	0.40 0.40 0.40	V
I_{in}	Maximum Input Leakage Current	$V_{in} = V_{CC}$ or GND	6.0	± 0.1	± 1.0	± 1.0	μA
I_{OZ}	Maximum Three–State Leakage Current	Output in High–Impedance State $V_{in} = V_{IL}$ or V_{IH} $V_{out} = V_{CC}$ or GND	6.0	± 0.5	± 5.0	± 10	μA
I_{CC}	Maximum Quiescent Supply Current (per Package)	$V_{in} = V_{CC}$ or GND $I_{out} = 0\ \mu A$	6.0	4	40	160	μA

NOTE: Information on typical parametric values can be found in Chapter 2 of the ON Semiconductor High–Speed CMOS Data Book (DL129/D).

AC ELECTRICAL CHARACTERISTICS (C_L = 50 pF, Input $t_r = t_f$ = 6.0 ns)

Symbol	Parameter	V_{CC} V	Guaranteed Limit – 55 to 25°C	≤ 85°C	≤ 125°C	Unit
f_{max}	Maximum Clock Frequency (50% Duty Cycle)	2.0 3.0 4.5 6.0	6 15 30 35	5 10 24 28	4 8 20 24	MHz
t_{PLH} t_{PHL}	Maximum Propagation Delay, Input Clock to Q (Figures 1 and 5)	2.0 3.0 4.5 6.0	125 80 25 21	155 110 31 26	190 130 38 32	ns
t_{PLZ} t_{PHZ}	Maximum Propagation Delay, Output Enable to Q (Figures 3 and 6)	2.0 3.0 4.5 6.0	150 100 30 26	190 125 38 33	225 150 45 38	ns
t_{PLZ} t_{PHZ}	Maximum Propagation Delay, Output Enable to Q (Figures 3 and 6)	2.0 3.0 4.5 6.0	150 100 30 26	190 125 38 33	225 150 45 38	ns
t_{TLH} t_{THL}	Maximum Output Transition Time, Any Output (Figures 1 and 5)	2.0 3.0 4.5 6.0	75 27 15 13	95 32 19 16	110 36 22 19	ns
C_{in}	Maximum Input Capacitance		10	10	10	pF
C_{out}	Maximum Three–State Output Capacitance (Output in High–Impedance State)		15	15	15	pF

NOTE: For propagation delays with loads other than 50 pF, and information on typical parametric values, see Chapter 2 of the ON Semiconductor High–Speed CMOS Data Book (DL129/D).

		Typical @ 25°C, V_{CC} = 5.0 V	
C_{PD}	Power Dissipation Capacitance (Per Enabled Output)*	34	pF

* Used to determine the no–load dynamic power consumption: $P_D = C_{PD} V_{CC}^2 f + I_{CC} V_{CC}$. For load considerations, see Chapter 2 of the ON Semiconductor High–Speed CMOS Data Book (DL129/D).

TIMING REQUIREMENTS (C_L = 50 pF, Input $t_r = t_f$ = 6.0 ns)

Symbol	Parameter	Fig.	V_{CC} Volts	Guaranteed Limit						Unit
				– 55 to 25°C		≤ 85°C		≤ 125°C		
				Min	Max	Min	Max	Min	Max	
t_{su}	Minimum Setup Time, Data to Clock	3	2.0 3.0 4.5 6.0	50 40 10 9		65 50 13 11		75 60 15 13		ns
t_h	Minimum Hold Time, Clock to Data	3	2.0 3.0 4.5 6.0	5.0 5.0 5.0 5.0		5.0 5 0 5.0 5.0		5.0 5.0 5.0 5.0		ns
t_w	Minimum Pulse Width, Clock	1	2.0 3.0 4.5 6.0	60 23 12 10		75 27 15 13		90 32 18 15		ns
t_r, t_f	Maximum Input Rise and Fall Times	1	2.0 3.0 4.5 6.0		1000 800 500 400		1000 800 500 400		1000 800 500 400	ns

SWITCHING WAVEFORMS

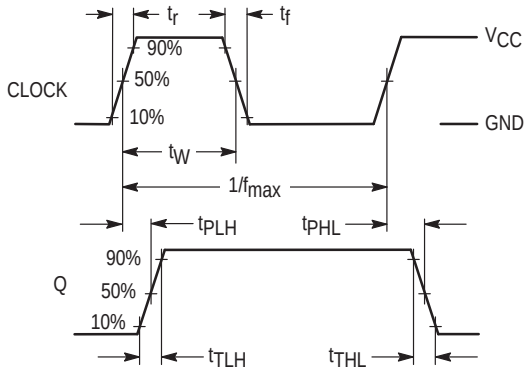

Figure 1.

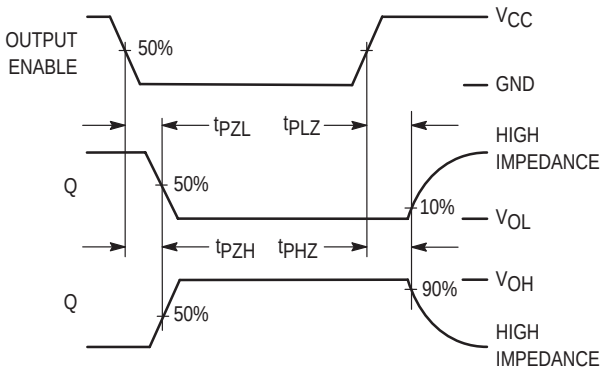

Figure 2.

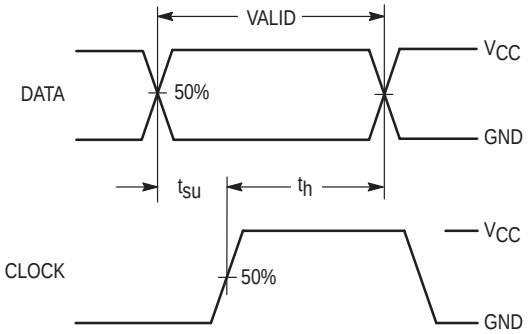

Figure 3.

TEST CIRCUITS

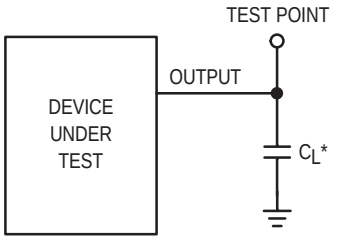

*Includes all probe and jig capacitance

Figure 4.

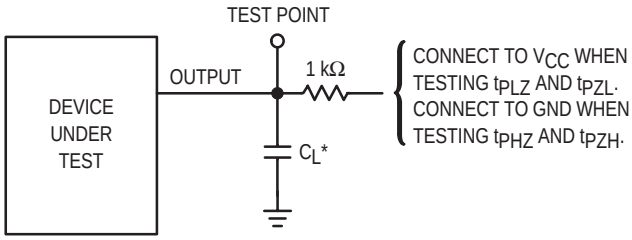

*Includes all probe and jig capacitance

Figure 5.

EXPANDED LOGIC DIAGRAM

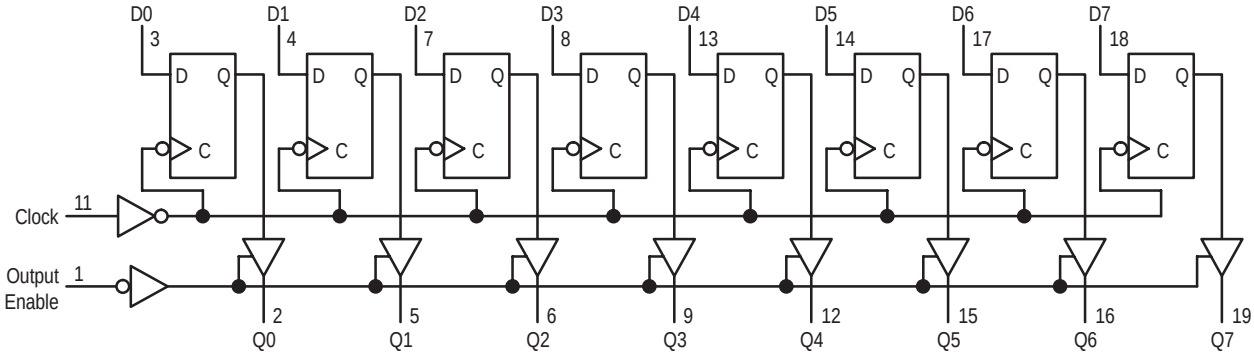

PACKAGE DIMENSIONS

PDIP–20
N SUFFIX
PLASTIC DIP PACKAGE
CASE 738–03
ISSUE E

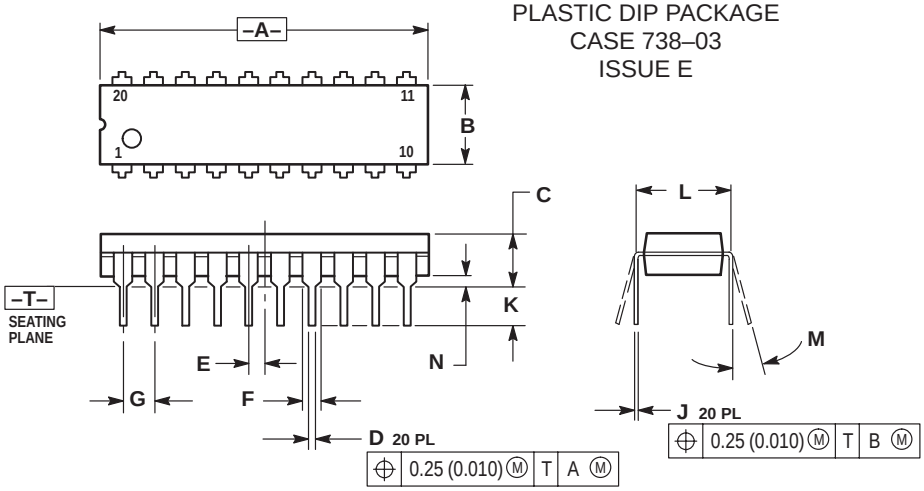

NOTES:
1. DIMENSIONING AND TOLERANCING PER ANSI Y14.5M, 1982.
2. CONTROLLING DIMENSION: INCH.
3. DIMENSION L TO CENTER OF LEAD WHEN FORMED PARALLEL.
4. DIMENSION B DOES NOT INCLUDE MOLD FLASH.

DIM	INCHES MIN	INCHES MAX	MILLIMETERS MIN	MILLIMETERS MAX
A	1.010	1.070	25.66	27.17
B	0.240	0.260	6.10	6.60
C	0.150	0.180	3.81	4.57
D	0.015	0.022	0.39	0.55
E	0.050 BSC		1.27 BSC	
F	0.050	0.070	1.27	1.77
G	0.100 BSC		2.54 BSC	
J	0.008	0.015	0.21	0.38
K	0.110	0.140	2.80	3.55
L	0.300 BSC		7.62 BSC	
M	0°	15°	0°	15°
N	0.020	0.040	0.51	1.01

SO–20
DW SUFFIX
CASE 751D–05
ISSUE F

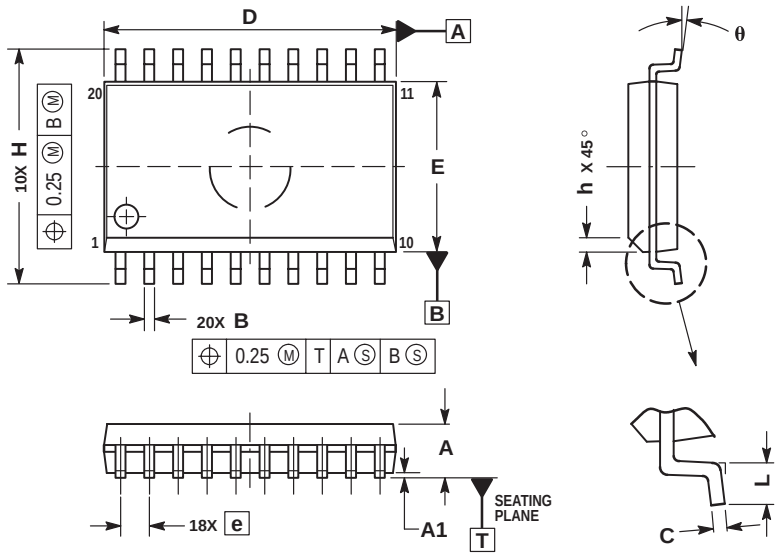

NOTES:
1. DIMENSIONS ARE IN MILLIMETERS.
2. INTERPRET DIMENSIONS AND TOLERANCES PER ASME Y14.5M, 1994.
3. DIMENSIONS D AND E DO NOT INCLUDE MOLD PROTRUSION.
4. MAXIMUM MOLD PROTRUSION 0.15 PER SIDE.
5. DIMENSION B DOES NOT INCLUDE DAMBAR PROTRUSION. ALLOWABLE PROTRUSION SHALL BE 0.13 TOTAL IN EXCESS OF B DIMENSION AT MAXIMUM MATERIAL CONDITION.

DIM	MILLIMETERS MIN	MILLIMETERS MAX
A	2.35	2.65
A1	0.10	0.25
B	0.35	0.49
C	0.23	0.32
D	12.65	12.95
E	7.40	7.60
e	1.27 BSC	
H	10.05	10.55
h	0.25	0.75
L	0.50	0.90
θ	0°	7°

PACKAGE DIMENSIONS

TSSOP–20
DT SUFFIX
CASE 948E–02
ISSUE A

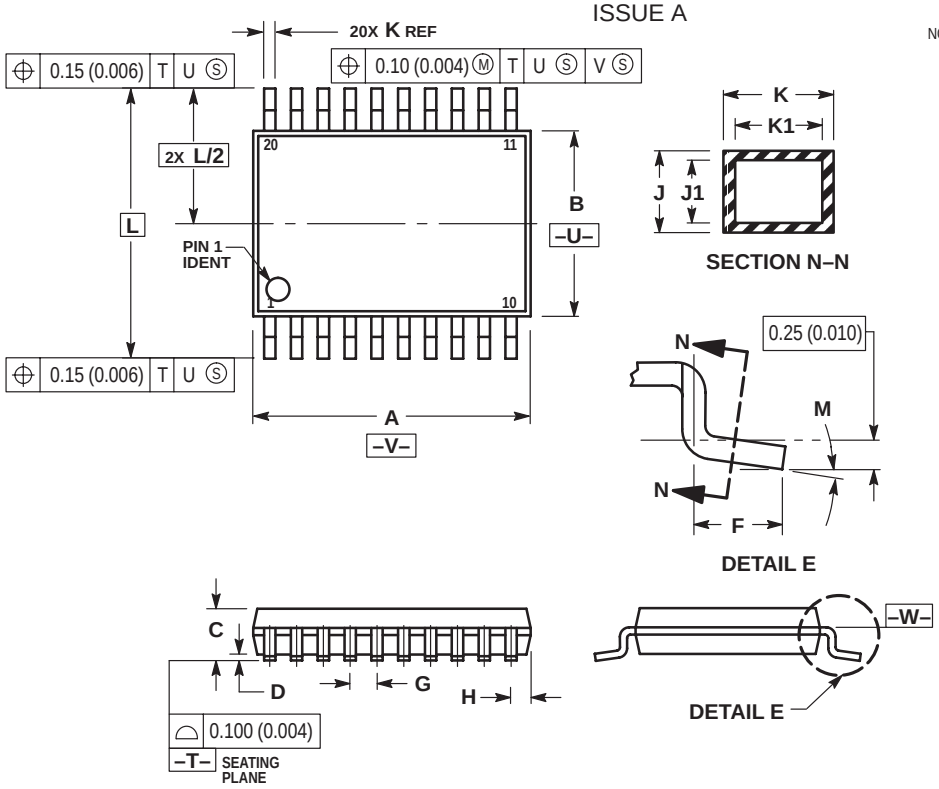

NOTES:
1. DIMENSIONING AND TOLERANCING PER ANSI Y14.5M, 1982.
2. CONTROLLING DIMENSION: MILLIMETER.
3. DIMENSION A DOES NOT INCLUDE MOLD FLASH, PROTRUSIONS OR GATE BURRS. MOLD FLASH OR GATE BURRS SHALL NOT EXCEED 0.15 (0.006) PER SIDE.
4. DIMENSION B DOES NOT INCLUDE INTERLEAD FLASH OR PROTRUSION. INTERLEAD FLASH OR PROTRUSION SHALL NOT EXCEED 0.25 (0.010) PER SIDE.
5. DIMENSION K DOES NOT INCLUDE DAMBAR PROTRUSION. ALLOWABLE DAMBAR PROTRUSION SHALL BE 0.08 (0.003) TOTAL IN EXCESS OF THE K DIMENSION AT MAXIMUM MATERIAL CONDITION.
6. TERMINAL NUMBERS ARE SHOWN FOR REFERENCE ONLY.
7. DIMENSION A AND B ARE TO BE DETERMINED AT DATUM PLANE –W–.

	MILLIMETERS		INCHES	
DIM	MIN	MAX	MIN	MAX
A	6.40	6.60	0.252	0.260
B	4.30	4.50	0.169	0.177
C	—	1.20	—	0.047
D	0.05	0.15	0.002	0.006
F	0.50	0.75	0.020	0.030
G	0.65 BSC		0.026 BSC	
H	0.27	0.37	0.011	0.015
J	0.09	0.20	0.004	0.008
J1	0.09	0.16	0.004	0.006
K	0.19	0.30	0.007	0.012
K1	0.19	0.25	0.007	0.010
L	6.40 BSC		0.252 BSC	
M	0°	8°	0°	8°

ON Semiconductor and are trademarks of Semiconductor Components Industries, LLC (SCILLC). SCILLC reserves the right to make changes without further notice to any products herein. SCILLC makes no warranty, representation or guarantee regarding the suitability of its products for any particular purpose, nor does SCILLC assume any liability arising out of the application or use of any product or circuit, and specifically disclaims any and all liability, including without limitation special, consequential or incidental damages. "Typical" parameters which may be provided in SCILLC data sheets and/or specifications can and do vary in different applications and actual performance may vary over time. All operating parameters, including "Typicals" must be validated for each customer application by customer's technical experts. SCILLC does not convey any license under its patent rights nor the rights of others. SCILLC products are not designed, intended, or authorized for use as components in systems intended for surgical implant into the body, or other applications intended to support or sustain life, or for any other application in which the failure of the SCILLC product could create a situation where personal injury or death may occur. Should Buyer purchase or use SCILLC products for any such unintended or unauthorized application, Buyer shall indemnify and hold SCILLC and its officers, employees, subsidiaries, affiliates, and distributors harmless against all claims, costs, damages, and expenses, and reasonable attorney fees arising out of, directly or indirectly, any claim of personal injury or death associated with such unintended or unauthorized use, even if such claim alleges that SCILLC was negligent regarding the design or manufacture of the part. SCILLC is an Equal Opportunity/Affirmative Action Employer.

PUBLICATION ORDERING INFORMATION

NORTH AMERICA Literature Fulfillment:
Literature Distribution Center for ON Semiconductor
P.O. Box 5163, Denver, Colorado 80217 USA
Phone: 303–675–2175 or 800–344–3860 Toll Free USA/Canada
Fax: 303–675–2176 or 800–344–3867 Toll Free USA/Canada
Email: ONlit@hibbertco.com
Fax Response Line: 303–675–2167 or 800–344–3810 Toll Free USA/Canada

N. American Technical Support: 800–282–9855 Toll Free USA/Canada

EUROPE: LDC for ON Semiconductor – European Support
German Phone: (+1) 303–308–7140 (M–F 1:00pm to 5:00pm Munich Time)
Email: ONlit–german@hibbertco.com
French Phone: (+1) 303–308–7141 (M–F 1:00pm to 5:00pm Toulouse Time)
Email: ONlit–french@hibbertco.com
English Phone: (+1) 303–308–7142 (M–F 12:00pm to 5:00pm UK Time)
Email: ONlit@hibbertco.com

EUROPEAN TOLL–FREE ACCESS*: 00–800–4422–3781
*Available from Germany, France, Italy, England, Ireland

CENTRAL/SOUTH AMERICA:
Spanish Phone: 303–308–7143 (Mon–Fri 8:00am to 5:00pm MST)
Email: ONlit–spanish@hibbertco.com

ASIA/PACIFIC: LDC for ON Semiconductor – Asia Support
Phone: 303–675–2121 (Tue–Fri 9:00am to 1:00pm, Hong Kong Time)
Toll Free from Hong Kong & Singapore:
001–800–4422–3781
Email: ONlit–asia@hibbertco.com

JAPAN: ON Semiconductor, Japan Customer Focus Center
4–32–1 Nishi–Gotanda, Shinagawa–ku, Tokyo, Japan 141–8549
Phone: 81–3–5740–2745
Email: r14525@onsemi.com

ON Semiconductor Website: http://onsemi.com

For additional information, please contact your local Sales Representative.