MC74HCT373A

Octal 3-State Noninverting Transparent Latch with LSTTL-Compatible Inputs

High–Performance Silicon–Gate CMOS

The MC74HCT373A may be used as a level converter for interfacing TTL or NMOS outputs to High–Speed CMOS inputs.

The HCT373A is identical in pinout to the LS373.

The eight latches of the HCT373A are transparent D–type latches. While the Latch Enable is high the Q outputs follow the Data Inputs. When Latch Enable is taken low, data meeting the setup and hold times becomes latched.

The Output Enable does not affect the state of the latch, but when Output Enable is high, all outputs are forced to the high–impedance state. Thus, data may be latched even when the outputs are not enabled.

The HCT373A is identical in function to the HCT573A, which has the input pins on the opposite side of the package from the output pins. This device is similar in function to the HCT533A, which has inverting outputs.

- Output Drive Capability: 15 LSTTL Loads
- TTL/NMOS–Compatible Input Levels
- Outputs Directly Interface to CMOS, NMOS, and TTL
- Operating Voltage Range: 4.5 to 5.5 V
- Low Input Current: 1.0 μA
- In Compliance with the Requirements Defined by JEDEC Standard No. 7A
- Chip Complexity: 196 FETs or 49 Equivalent Gates

ON Semiconductor

http://onsemi.com

MARKING DIAGRAMS

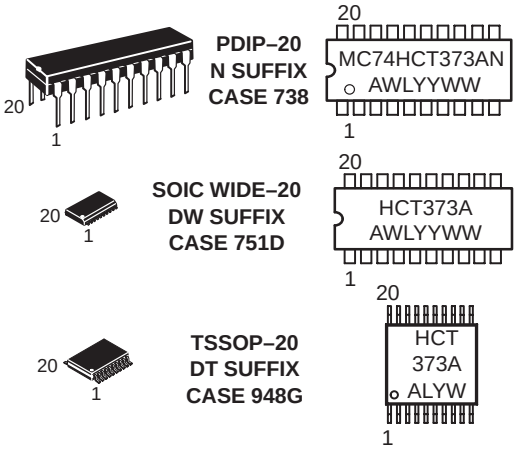

A = Assembly Location
WL = Wafer Lot
YY = Year
WW = Work Week

PIN ASSIGNMENT

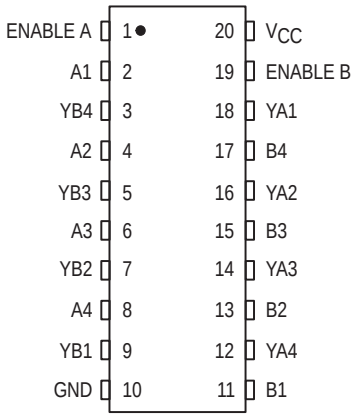

ORDERING INFORMATION

Device	Package	Shipping
MC74HCT373AN	PDIP–20	1440 / Box
MC74HCT373ADW	SOIC–WIDE	38 / Rail
MC74HCT373ADWR2	SOIC–WIDE	1000 / Reel
MC74HCT373ADT	TSSOP–20	75 / Rail
MC74HCT373ADTR2	TSSOP–20	2500 / Reel

© Semiconductor Components Industries, LLC, 2000

March, 2000 – Rev. 8

Publication Order Number:
MC74HCT373A/D

LOGIC DIAGRAM

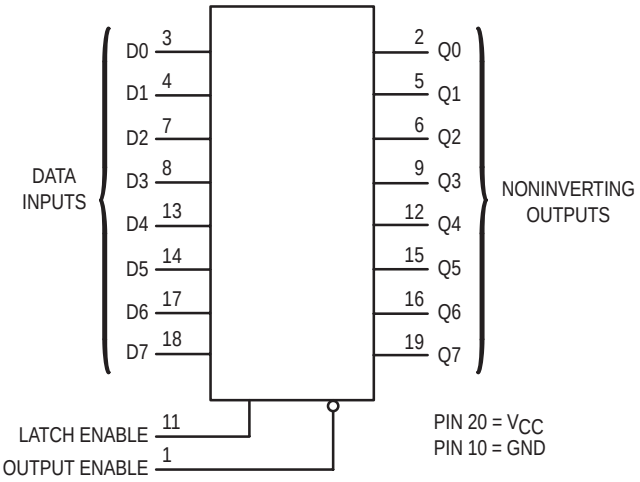

PIN ASSIGNMENT

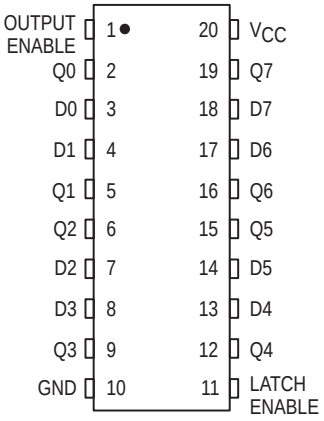

FUNCTION TABLE

Inputs			Output
Output Enable	**Latch Enable**	**D**	**Q**
L	H	H	H
L	H	L	L
L	L	X	No Change
H	X	X	Z

X = don’t care
Z = high impedance

Design Criteria	Value	Units
Internal Gate Count*	49	ea.
Internal Gate Propagation Delay	1.5	ns
Internal Gate Power Dissipation	5.0	μW
Speed Power Product	.0075	pJ

*Equivalent to a two–input NAND gate.

MAXIMUM RATINGS*

Symbol	Parameter	Value	Unit
V_{CC}	DC Supply Voltage (Referenced to GND)	– 0.5 to + 7.0	V
V_{in}	DC Input Voltage (Referenced to GND)	– 0.5 to V_{CC} + 0.5	V
V_{out}	DC Output Voltage (Referenced to GND)	– 0.5 to V_{CC} + 0.5	V
I_{in}	DC Input Current, per Pin	± 20	mA
I_{out}	DC Output Current, per Pin	± 35	mA
I_{CC}	DC Supply Current, V_{CC} and GND Pins	± 75	mA
P_D	Power Dissipation in Still Air, Plastic DIP† SOIC Package† TSSOP Package†	750 500 450	mW
T_{stg}	Storage Temperature	– 65 to + 150	°C
T_L	Lead Temperature, 1 mm from Case for 10 Seconds (Plastic DIP, SOIC, SSOP or TSSOP Package)	260	°C

This device contains protection circuitry to guard against damage due to high static voltages or electric fields. However, precautions must be taken to avoid applications of any voltage higher than maximum rated voltages to this high–impedance circuit. For proper operation, V_{in} and V_{out} should be constrained to the range GND ≤ (V_{in} or V_{out}) ≤ V_{CC}.

Unused inputs must always be tied to an appropriate logic voltage level (e.g., either GND or V_{CC}). Unused outputs must be left open.

*Maximum Ratings are those values beyond which damage to the device may occur.
Functional operation should be restricted to the Recommended Operating Conditions.

†Derating — Plastic DIP: – 10 mW/°C from 65° to 125°C
SOIC Package: – 7 mW/°C from 65° to 125°C
TSSOP Package: – 6.1 mW/°C from 65° to 125°C

For high frequency or heavy load considerations, see Chapter 2 of the ON Semiconductor High–Speed CMOS Data Book (DL129/D).

RECOMMENDED OPERATING CONDITIONS

Symbol	Parameter	Min	Max	Unit
V_{CC}	DC Supply Voltage (Referenced to GND)	4.5	5.5	V
V_{in}, V_{out}	DC Input Voltage, Output Voltage (Referenced to GND)	0	V_{CC}	V
T_A	Operating Temperature, All Package Types	– 55	+ 125	°C
t_r, t_f	Input Rise and Fall Time (Figure 1)	0	500	ns

DC ELECTRICAL CHARACTERISTICS (Voltages Referenced to GND)

Symbol	Parameter	Test Conditions	V_{CC} V	Guaranteed Limit – 55 to 25°C	≤ 85°C	≤ 125°C	Unit
V_{IH}	Minimum High–Level Input Voltage	V_{out} = 0.1 V or V_{CC} – 0.1 V $\|I_{out}\|$ ≤ 20 μA	4.5 5.5	2.0 2.0	2.0 2.0	2.0 2.0	V
V_{IL}	Maximum Low–Level Input Voltage	V_{out} = 0.1 V or V_{CC} – 0.1 V $\|I_{out}\|$ ≤ 20 μA	4.5 5.5	0.8 0.8	0.8 0.8	0.8 0.8	V
V_{OH}	Minimum High–Level Output Voltage	V_{in} = V_{IH} or V_{IL} $\|I_{out}\|$ ≤ 20 μA	4.5 5.5	4.4 5.4	4.4 5.4	4.4 5.4	V
		V_{in} = V_{IH} or V_{IL} $\|I_{out}\|$ ≤ 6.0 mA	4.5	3.98	3.84	3.7	
V_{OL}	Maximum Low–Level Output Voltage	V_{in} = V_{IH} or V_{IL} $\|I_{out}\|$ ≤ 20 μA	4.5 5.5	0.1 0.1	0.1 0.1	0.1 0.1	V
		V_{in} = V_{IH} or V_{IL} $\|I_{out}\|$ ≤ 6.0 mA	4.5	0.26	0.33	0.4	
I_{in}	Maximum Input Leakage Current	V_{in} = V_{CC} or GND	5.5	± 0.1	± 1.0	± 1.0	μA
I_{OZ}	Maximum Three–State Leakage Current	Output in High–Impedance State V_{in} = V_{IL} or V_{IH} V_{out} = V_{CC} or GND	5.5	± 0.5	± 5.0	± 10	μA
I_{CC}	Maximum Quiescent Supply Current (per Package)	V_{in} = V_{CC} or GND I_{out} = 0 μA	5.5	4.0	40	160	μA

ΔI_{CC}	Additional Quiescent Supply Current	V_{in} = 2.4 V, Any One Input V_{in} = V_{CC} or GND, Other Inputs I_{out} = 0 μA	5.5	≥ **–55°C**	**25°C to 125°C**	mA
				2.9	2.4	

NOTE: 1. Total Supply Current = $I_{CC} + \Sigma\Delta I_{CC}$.
NOTE: Information on typical parametric values can be found in Chapter 2 of the ON Semiconductor High–Speed CMOS Data Book (DL129/D).

AC ELECTRICAL CHARACTERISTICS (V_{CC} = 5.0 V ± 10%, C_L = 50 pF, Input $t_r = t_f$ = 6.0 ns)

Symbol	Parameter	Guaranteed Limit			Unit
		– 55 to 25°C	**≤ 85°C**	**≤ 125°C**	
t_{PLH}, t_{PHL}	Maximum Propagation Delay, Input D to Q (Figures 1 and 5)	28	35	42	ns
t_{PLH}, t_{PHL}	Maximum Propagation Delay, Latch Enable to Q (Figures 2 and 5)	32	40	48	ns
t_{PLZ}, t_{PHZ}	Maximum Propagation Delay, Output Enable to Q (Figures 3 and 6)	30	38	45	ns
t_{PZL}, t_{PZH}	Maximum Propagation Delay, Output Enable to Q (Figures 3 and 6)	35	44	53	ns
t_{TLH}, t_{THL}	Maximum Output Transition Time, Any Output (Figures 1 and 5)	12	15	18	ns
C_{in}	Maximum Input Capacitance	10	10	10	pF
C_{out}	Maximum Three–State Output Capacitance (Output in High–Impedance State)	15	15	15	pF

NOTE: For propagation delays with loads other than 50 pF, and information on typical parametric values, see Chapter 2 of the ON Semiconductor High–Speed CMOS Data Book (DL129/D).

		Typical @ 25°C, V_{CC} = 5.0 V	
C_{PD}	Power Dissipation Capacitance (Per Latch)*	65	pF

* Used to determine the no–load dynamic power consumption: $P_D = C_{PD} V_{CC}^2 f + I_{CC} V_{CC}$. For load considerations, see Chapter 2 of the ON Semiconductor High–Speed CMOS Data Book (DL129/D).

TIMING REQUIREMENTS (V_{CC} = 5.0 V ± 10%, Input $t_r = t_f$ = 6.0 ns)

Symbol	Parameter	Guaranteed Limit			Unit
		– 55 to 25°C	**≤ 85°C**	**≤ 125°C**	
t_{su}	Minimum Setup Time, Input D to Latch Enable (Figure 4)	10	13	15	ns
t_h	Minimum Hold Time, Latch Enable to Input D (Figure 4)	10	13	15	ns
t_w	Minimum Pulse Width, Latch Enable (Figure 2)	12	15	18	ns
t_r, t_f	Maximum Input Rise and Fall Times (Figure 1)	500	500	500	ns

EXPANDED LOGIC DIAGRAM

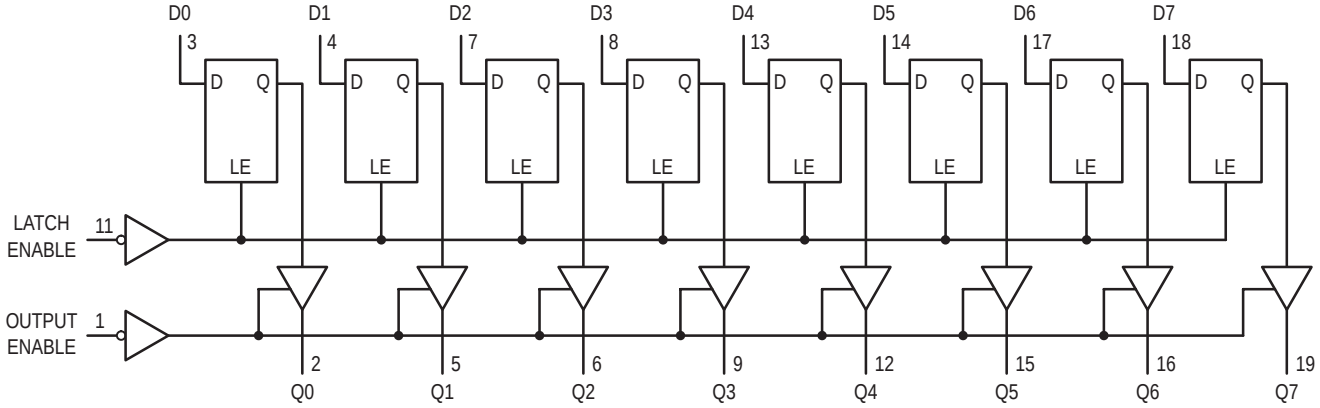

SWITCHING WAVEFORMS

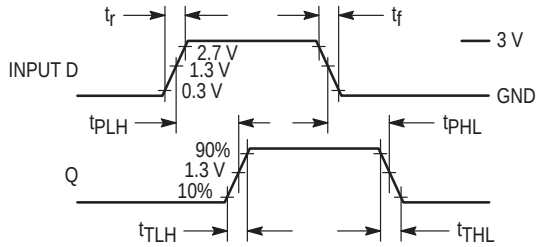

Figure 1.

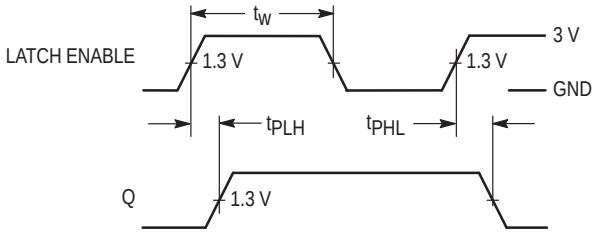

Figure 2.

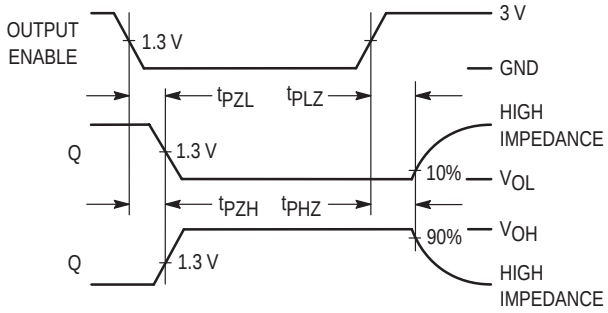

Figure 3.

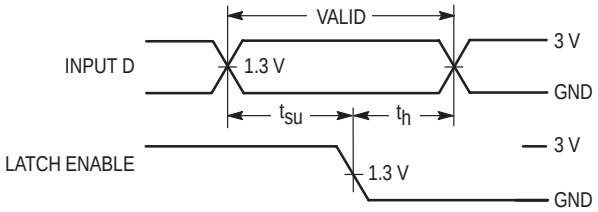

Figure 4.

TEST CIRCUITS

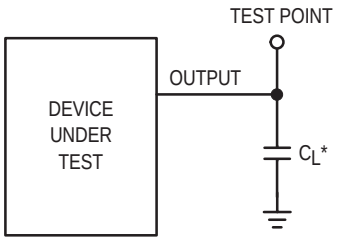

*Includes all probe and jig capacitance

Figure 5.

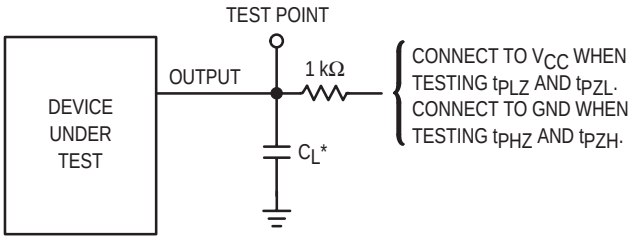

*Includes all probe and jig capacitance

Figure 6.

PACKAGE DIMENSIONS

PDIP–20
N SUFFIX
PLASTIC DIP PACKAGE
CASE 738–03
ISSUE E

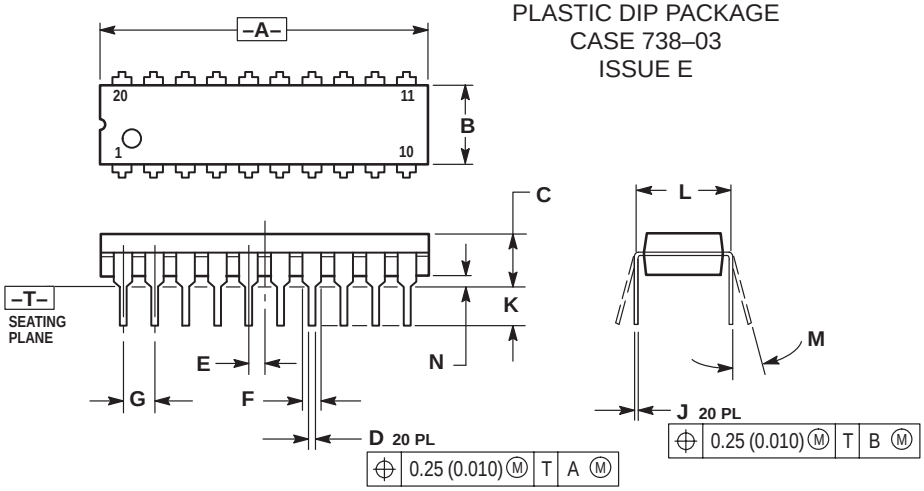

NOTES:
1. DIMENSIONING AND TOLERANCING PER ANSI Y14.5M, 1982.
2. CONTROLLING DIMENSION: INCH.
3. DIMENSION L TO CENTER OF LEAD WHEN FORMED PARALLEL.
4. DIMENSION B DOES NOT INCLUDE MOLD FLASH.

DIM	INCHES MIN	INCHES MAX	MILLIMETERS MIN	MILLIMETERS MAX
A	1.010	1.070	25.66	27.17
B	0.240	0.260	6.10	6.60
C	0.150	0.180	3.81	4.57
D	0.015	0.022	0.39	0.55
E	0.050 BSC		1.27 BSC	
F	0.050	0.070	1.27	1.77
G	0.100 BSC		2.54 BSC	
J	0.008	0.015	0.21	0.38
K	0.110	0.140	2.80	3.55
L	0.300 BSC		7.62 BSC	
M	0°	15°	0°	15°
N	0.020	0.040	0.51	1.01

SO–20
DW SUFFIX
CASE 751D–05
ISSUE F

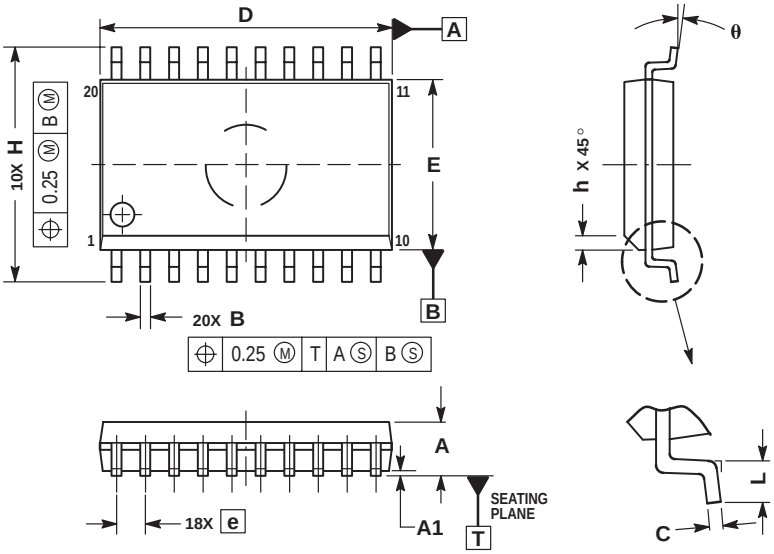

NOTES:
1. DIMENSIONS ARE IN MILLIMETERS.
2. INTERPRET DIMENSIONS AND TOLERANCES PER ASME Y14.5M, 1994.
3. DIMENSIONS D AND E DO NOT INCLUDE MOLD PROTRUSION.
4. MAXIMUM MOLD PROTRUSION 0.15 PER SIDE.
5. DIMENSION B DOES NOT INCLUDE DAMBAR PROTRUSION. ALLOWABLE PROTRUSION SHALL BE 0.13 TOTAL IN EXCESS OF B DIMENSION AT MAXIMUM MATERIAL CONDITION.

DIM	MILLIMETERS MIN	MILLIMETERS MAX
A	2.35	2.65
A1	0.10	0.25
B	0.35	0.49
C	0.23	0.32
D	12.65	12.95
E	7.40	7.60
e	1.27 BSC	
H	10.05	10.55
h	0.25	0.75
L	0.50	0.90
θ	0°	7°

PACKAGE DIMENSIONS

TSSOP–20
DT SUFFIX
CASE 948E–02
ISSUE A

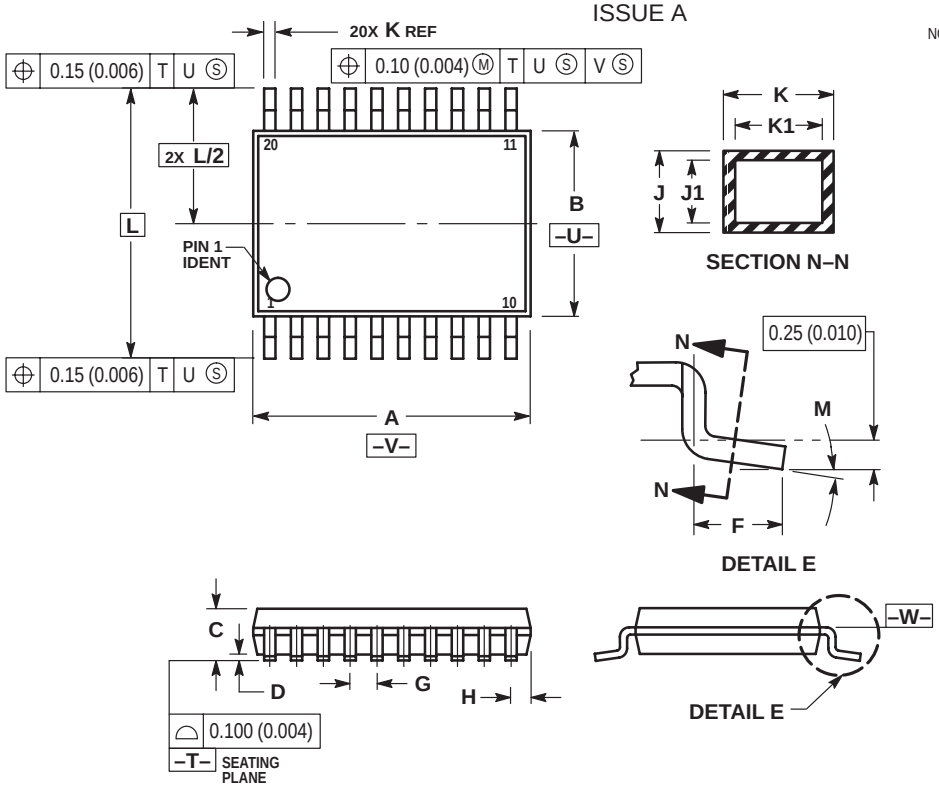

NOTES:
1. DIMENSIONING AND TOLERANCING PER ANSI Y14.5M, 1982.
2. CONTROLLING DIMENSION: MILLIMETER.
3. DIMENSION A DOES NOT INCLUDE MOLD FLASH, PROTRUSIONS OR GATE BURRS. MOLD FLASH OR GATE BURRS SHALL NOT EXCEED 0.15 (0.006) PER SIDE.
4. DIMENSION B DOES NOT INCLUDE INTERLEAD FLASH OR PROTRUSION. INTERLEAD FLASH OR PROTRUSION SHALL NOT EXCEED 0.25 (0.010) PER SIDE.
5. DIMENSION K DOES NOT INCLUDE DAMBAR PROTRUSION. ALLOWABLE DAMBAR PROTRUSION SHALL BE 0.08 (0.003) TOTAL IN EXCESS OF THE K DIMENSION AT MAXIMUM MATERIAL CONDITION.
6. TERMINAL NUMBERS ARE SHOWN FOR REFERENCE ONLY.
7. DIMENSION A AND B ARE TO BE DETERMINED AT DATUM PLANE –W–.

	MILLIMETERS		INCHES	
DIM	MIN	MAX	MIN	MAX
A	6.40	6.60	0.252	0.260
B	4.30	4.50	0.169	0.177
C	—	1.20	—	0.047
D	0.05	0.15	0.002	0.006
F	0.50	0.75	0.020	0.030
G	0.65 BSC		0.026 BSC	
H	0.27	0.37	0.011	0.015
J	0.09	0.20	0.004	0.008
J1	0.09	0.16	0.004	0.006
K	0.19	0.30	0.007	0.012
K1	0.19	0.25	0.007	0.010
L	6.40 BSC		0.252 BSC	
M	0°	8°	0°	8°

ON Semiconductor and are trademarks of Semiconductor Components Industries, LLC (SCILLC). SCILLC reserves the right to make changes without further notice to any products herein. SCILLC makes no warranty, representation or guarantee regarding the suitability of its products for any particular purpose, nor does SCILLC assume any liability arising out of the application or use of any product or circuit, and specifically disclaims any and all liability, including without limitation special, consequential or incidental damages. "Typical" parameters which may be provided in SCILLC data sheets and/or specifications can and do vary in different applications and actual performance may vary over time. All operating parameters, including "Typicals" must be validated for each customer application by customer's technical experts. SCILLC does not convey any license under its patent rights nor the rights of others. SCILLC products are not designed, intended, or authorized for use as components in systems intended for surgical implant into the body, or other applications intended to support or sustain life, or for any other application in which the failure of the SCILLC product could create a situation where personal injury or death may occur. Should Buyer purchase or use SCILLC products for any such unintended or unauthorized application, Buyer shall indemnify and hold SCILLC and its officers, employees, subsidiaries, affiliates, and distributors harmless against all claims, costs, damages, and expenses, and reasonable attorney fees arising out of, directly or indirectly, any claim of personal injury or death associated with such unintended or unauthorized use, even if such claim alleges that SCILLC was negligent regarding the design or manufacture of the part. SCILLC is an Equal Opportunity/Affirmative Action Employer.

PUBLICATION ORDERING INFORMATION

NORTH AMERICA Literature Fulfillment:
Literature Distribution Center for ON Semiconductor
P.O. Box 5163, Denver, Colorado 80217 USA
Phone: 303–675–2175 or 800–344–3860 Toll Free USA/Canada
Fax: 303–675–2176 or 800–344–3867 Toll Free USA/Canada
Email: ONlit@hibbertco.com
Fax Response Line: 303–675–2167 or 800–344–3810 Toll Free USA/Canada

N. American Technical Support: 800–282–9855 Toll Free USA/Canada

EUROPE: LDC for ON Semiconductor – European Support
German Phone: (+1) 303–308–7140 (M–F 1:00pm to 5:00pm Munich Time)
Email: ONlit–german@hibbertco.com
French Phone: (+1) 303–308–7141 (M–F 1:00pm to 5:00pm Toulouse Time)
Email: ONlit–french@hibbertco.com
English Phone: (+1) 303–308–7142 (M–F 12:00pm to 5:00pm UK Time)
Email: ONlit@hibbertco.com

EUROPEAN TOLL–FREE ACCESS*: 00–800–4422–3781
*Available from Germany, France, Italy, England, Ireland

CENTRAL/SOUTH AMERICA:
Spanish Phone: 303–308–7143 (Mon–Fri 8:00am to 5:00pm MST)
Email: ONlit–spanish@hibbertco.com

ASIA/PACIFIC: LDC for ON Semiconductor – Asia Support
Phone: 303–675–2121 (Tue–Fri 9:00am to 1:00pm, Hong Kong Time)
Toll Free from Hong Kong & Singapore:
001–800–4422–3781
Email: ONlit–asia@hibbertco.com

JAPAN: ON Semiconductor, Japan Customer Focus Center
4–32–1 Nishi–Gotanda, Shinagawa–ku, Tokyo, Japan 141–8549
Phone: 81–3–5740–2745
Email: r14525@onsemi.com

ON Semiconductor Website: http://onsemi.com

For additional information, please contact your local Sales Representative.