NCT51, NCT52

Ultra Small Temperature Switch with Pin-Selectable Hysteresis

The NCT51 and NCT52 are SOT–23 temperature switches that require no external components and the design is facilitated with factory–programmed temperature thresholds. A choice of factory–trimmed temperature trip points are available. Pin selectable hysteresis of +2°C or +10°C allows flexibility to the design. These parts typically consume only 17 μA of current and operate over the entire –55°C to +125°C temperature range while offering accuracies of ±0.5°C (typ) and ±4°C (max).

The NCT51 has an open drain, active low output, meant for microprocessor reset control. The NCT52 has a CMOS, active high output designed to drive a logic level MOSFET to turn on a fan or heater element.

The NCT51/NCT52 are aimed for hot–temperature monitoring (+45°C to +115°C). These devices assert a logic signal when the temperature goes above the threshold.

The NCT51 and NCT52 are offered in three standard temperature thresholds. Available in 5–Pin SOT–23A packages, these parts are ideal for applications requiring high integration, small size, low power and low installed cost.

Features

- 5–Pin SOT–23A
- Factory–Programmed Thresholds from +45°C to +115°C in 10°C Increments
- Pin–Selectable +2°C or +10°C Hysteresis
- ±0.5°C (Typ) Threshold Accuracy Over Full Temperature Range
- No External Components Required
- 17 μA Supply Current

Typical Applications

- Thermal Management in PCs and Servers
- Over Temperature Fail Safe Circuits
- Simple Fan Controller
- Temperature Alarms
- Projectors/Printers
- Notebook Computers
- Network Boxes

ON Semiconductor

http://onsemi.com

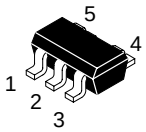

SOT–23A
SN SUFFIX
CASE 1212

PIN CONNECTIONS

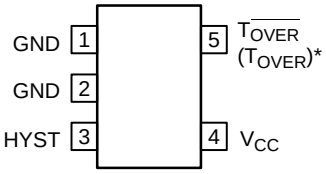

*For NCT52

Note: 5–Pin SOT–23A is equivalent to EIAJ SC–74A

ORDERING INFORMATION

See detailed ordering and shipping information in the package dimensions section on page 9 of this data sheet.

DEVICE MARKING INFORMATION

See general marking information in the device marking section on page 9 of this data sheet.

September, 2000 – Rev. 0

Publication Order Number:
NCT51/D

ABSOLUTE MAXIMUM RATINGS*

Rating	Symbol	Value	Unit
Supply Voltage	V_{CC}	–0.3 to +7.0	V
$\overline{TOVER}$ (NCT51)	–	–0.3 to +7.0	V
$\overline{TOVER}$ (NCT52)	–	–0.3 to (V_{CC} +0.3)	V
All Other Pins	–	–0.3 to (V_{CC} +0.3)	V
Input Current (All Pins)	–	20	mA
Output Current (All Pins)	–	20	mA
Operating Temperature Range	–	–55 to +125	°C
Storage Temperature Range	T_{stg}	–65 to +165	°C
Lead Temperature (Soldering, 10 seconds)	–	+300	°C
Power Dissipation (T_A = +70°C) (Derate 7.1 mW/°C Above +70°C)	–	571	mW

*Static–sensitive device. Unused devices must be stored in conductive material. Protect devices from static discharge and static fields. Stresses above those listed under Absolute Maximum Ratings may cause permanent damage to the device. These are stress ratings only and functional operation of the device at these or any other conditions above those indicated in the operational sections of the specifications is not implied. Exposure to Absolute Maximum Rating Conditions for extended periods may affect device reliability.

ELECTRICAL CHARACTERISTICS V_{CC} = +2.7 V to +5.5 V, $R_{PULL–UP}$ = 100 KΩ (NCT51 only), $C_{COUPLING}$ = 100 pF from V_{CC} to GND, $T_A = T_{MIN}$ to T_{MAX}, unless otherwise noted. Typical values are at T_A = +25°C.

Characteristics	Test Conditions	Symbol	Min	Typ	Max	Unit
Supply Voltage Range	–	V_{CC}	2.7	–	5.5	V
Supply Current	–	I_{CC}	–	17	40	μA
Temperature Threshold Accuracy (Note 1.)	+45°C to +65°C +75°C to +115°C	ΔT_{TH}	–4.0 –6.0	±0.5 ±0.5	4.0 6.0	°C
Temperature Threshold Hysteresis	HYST = GND HYST = V_{CC}	T_{HYST}	– –	2.0 10	– –	°C
HYST Input Threshold	–	V_{IH}	0.8 x V_{CC}	–	–	V
HYST Input Threshold	–	V_{IL}	–	–	0.2 x V_{CC}	V
Output Voltage High	I_{SOURCE} = 500 μA, V_{CC} > 2.7 V (NCT52 Only) I_{SOURCE} = 800 μA, V_{CC} > 4.5 V (NCT52 Only)	V_{OH}	0.8 x V_{CC} V_{CC} –1.5	– –	– –	V
Output Voltage Low	I_{SINK} = 1.2 mA, V_{CC} > 2.7 V I_{SINK} = 3.2 mA, V_{CC} > 4.5 V	V_{OL}	– –	– –	0.3 0.4	V
Open–Drain Output Leakage Current	V_{CC} = 2.7 V, $V_{\overline{TOVER}}$ = 5.5 V (NCT51 Only)	–	–	10	–	nA

1. The NCT51 and NCT52 are available with internal, factory–programmed temperature trip thresholds from +45°C to +115°C in +10°C increments.

PIN DESCRIPTION

NCT51	NCT52	Name	Description
1,2	1,2	GND	Ground. Ground both pins together close to the chip. Pin 2 provides the lowest thermal resistance to the die.
3	3	HYST	Hysteresis Input. Connect HYST to GND for +2°C hysteresis, or connect to V_{CC} for +10°C hysteresis.
4	4	V_{CC}	Supply Input (+2.7 V to +5.5 V). Recommend 100 pF or greater Coupling capacitor from V_{CC} to GND.
5	–	$\overline{\text{TOVER}}$	Open–Drain, Active–Low Output. $\overline{\text{TOVER}}$ goes low when the die temperature exceeds the factory–programmed temperature threshold. Connect to a 100 KΩ pull–up resistor. May be pulled up to a voltage higher than V_{CC}.
–	5	TOVER	Push/Pull Active–High Output. TOVER goes high when the die temperature exceeds the factory–programmed temperature threshold.
–	–	$\overline{\text{TUNDER}}$	Open–Drain, Active–Low Output. $\overline{\text{TUNDER}}$ goes low when the die temperature goes below the factory–programmed temperature threshold. Connect to a 100 KΩ pull–up resistor. May be pulled up to a voltage higher than V_{CC}.
–	–	TUNDER	Push/Pull Active–High Output. TUNDER goes high when the die temperature is below the factory–programmed temperature threshold.

Typical Operating Circuit

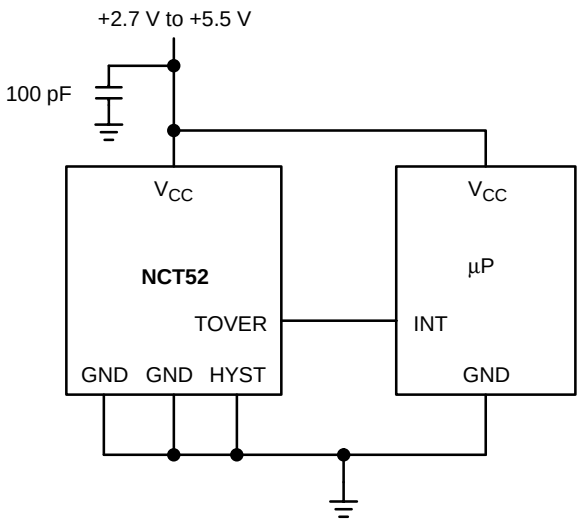

DETAILED DESCRIPTION

The NCT51 and NCT52 integrate a temperature sensor with a factory–programmed threshold switch. A logic signal is asserted when the die temperature crosses the factory programmed threshold. An external hysteresis input pin allows the user to select either 2°C or 10°C hysteresis to give further flexibility to the design of the application. The NCT51 and NCT52 are intended for a temperature range from 45°C to 115°C in a 10°C increment. The NCT51 has an open drain output and the NCT52 has a push/pull output stage.

The NCT51 is intended for applications with a microprocessor reset input. The NCT52 is intended for applications of turning on a fan or heater element.

Hysteresis Input

To prevent the output from “chattering’’ at or near the trip point temperature, a selectable HYST input pin is provided. Hysteresis can be externally selected at 2°C (HYST = GND) or 10°C (HYST = V_{DD}) by means of the CMOS compatible HYST input pin. Do not let the HYST pin float as this could cause increase supply current. The hysteresis does not depend on the part’s programmed trip threshold.

Table 1. Factory–Programmed Threshold Range

Part Number	Threshold (T_{TH}) Range
NCT51	+45°C < T_{TH} < +115°C
NCT52	+45°C < T_{TH} < +115°C

Thermal Considerations

With a very low 17 µA supply current, the NCT51 and NCT52 dissipates very little power. Thus, the die temperature is basically the same as the package temperature. To minimize the error in temperature readings, the load current should be limited to a few milliamps. As an example, the typical thermal resistance of a 5–Pin SOT–23A package is 140°C/W. If the NCT51 had to sink 1.0 mA, and the output voltage is guaranteed to be less than 0.3 V, then an additional 0.3 mW of power is dissipated within the IC. This corresponds to a 0.042°C rise in die temperature in the 5–Pin SOT–23A.

Temperature monitoring accuracy depends on the thermal resistance between the device being monitored and the temperature switch die. Heat flows primarily through the leads onto the die. Pin 2 provides the lowest thermal resistance to the die. To achieve the best temperature monitoring results, the NCT51 and NCT52 should be placed closest to the device being monitored. In addition, a short and wide copper trace from Pin 2 to the device should be used. In some cases, the 5–Pin SOT–23A package can be placed directly under the socketed microprocessor for improved thermal contact.

APPLICATIONS

The NCT51 has an open drain output and is therefore intended to interface as a microprocessor reset input. Moreover, the combination of these two devices can be used to implement a temperature window alarm by wire–ORing the outputs and using an external pull up resistor. (See Figure 1)

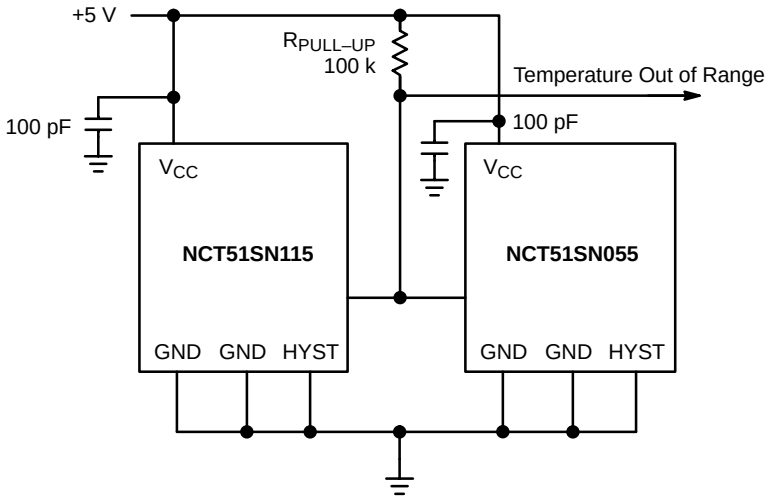

Figure 1. Over and Under Temperature Alarm

The NCT52 can be used to control a DC fan. The fan turns on when the sensed temperature rises above the factory set threshold and remains on until the temperature falls below threshold minus the hysteresis selected. An additional fail safe measure could be designed by using a second NCT52 with a higher temperature threshold to alert the user of an impending thermal shutdown, should the temperature continue to rise. (See Figure 2)

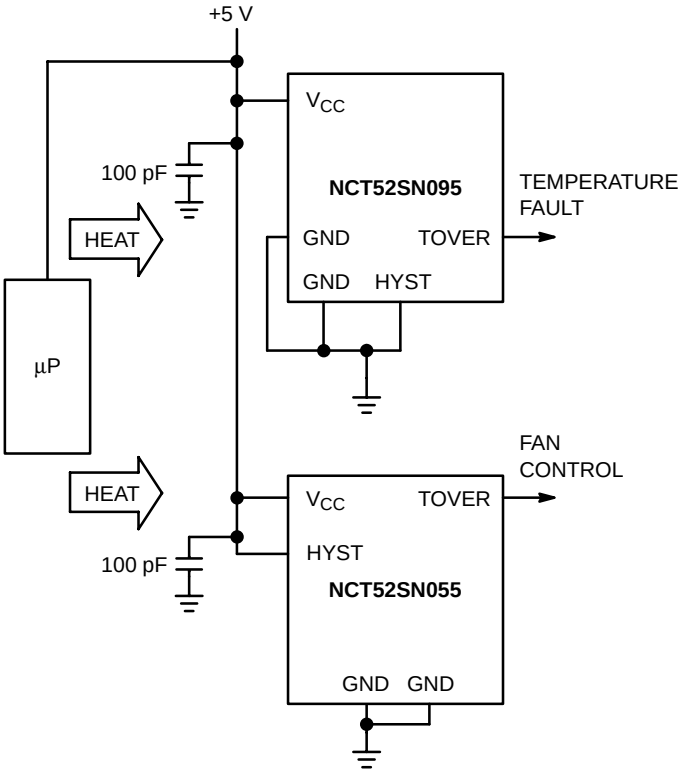

Figure 2. Fan Control Circuit with Over Temperature Alert

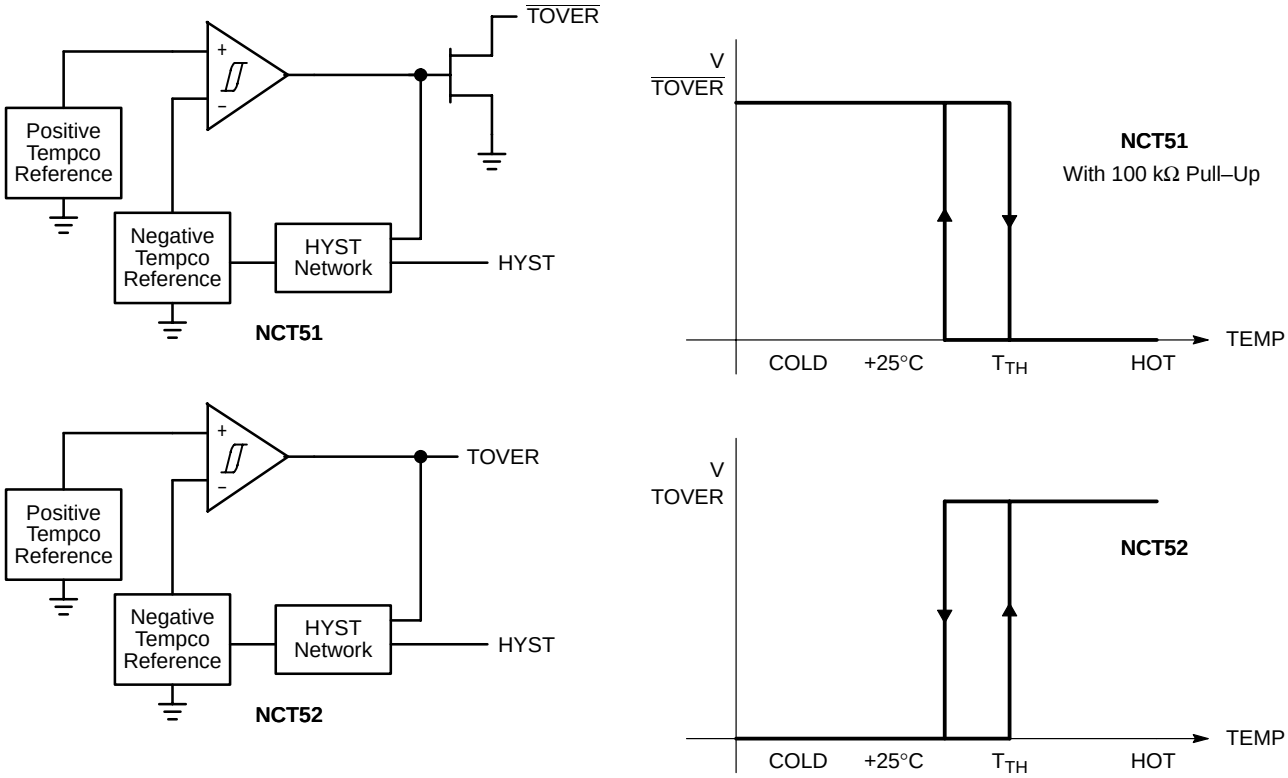

Figure 3. Functional Block Diagrams

TYPICAL CHARACTERISTICS

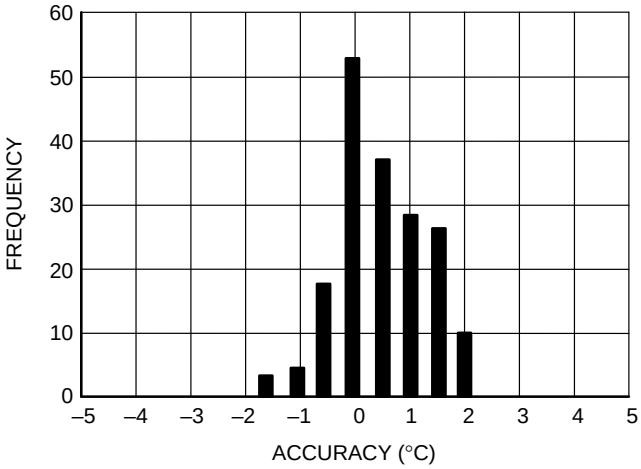

Figure 4. Trip Threshold Accuracy

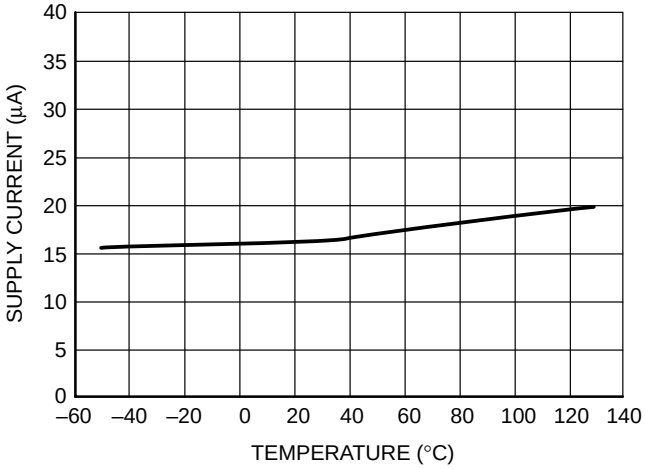

Figure 5. Supply Current vs. Temperature

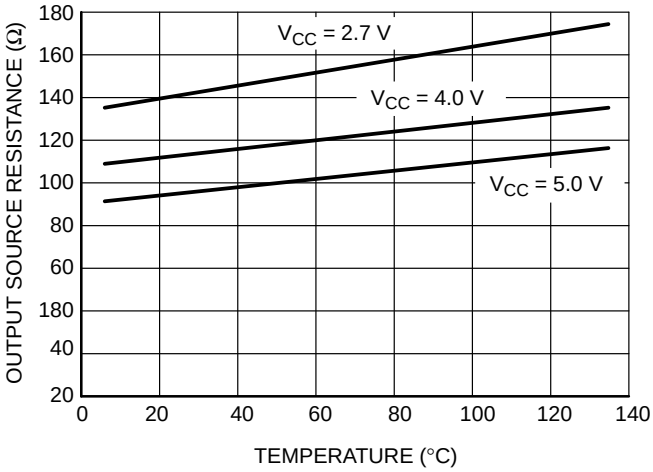

Figure 6. NCT52 Output Source Resistance vs. Temperature

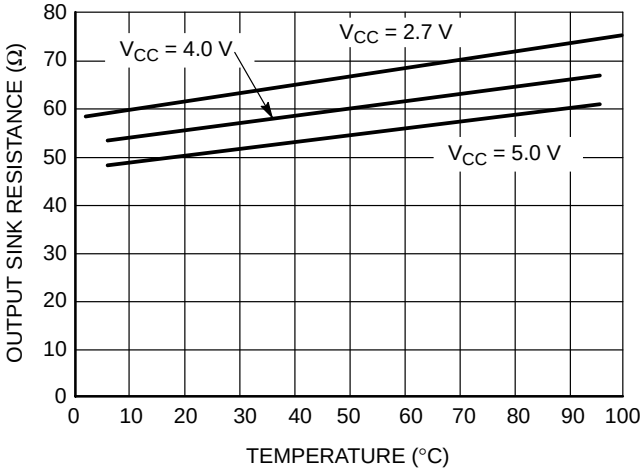

Figure 7. Output Sink Resistance vs. Temperature

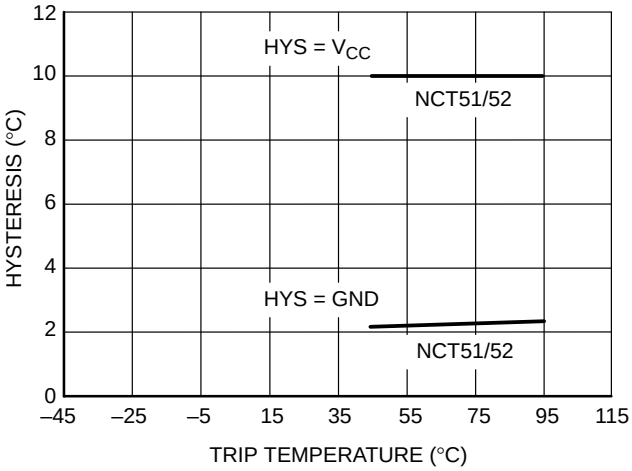

Figure 8. Hysteresis vs. Trip Temperature

TYPICAL CHARACTERISTICS

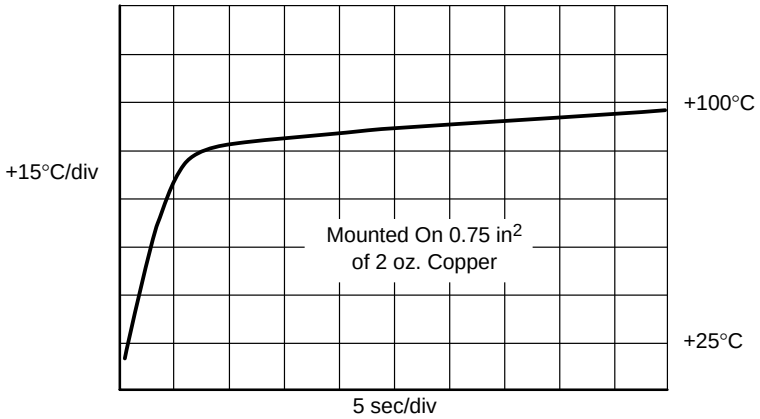

Figure 9. SOT−23 Thermal Step Response in Perfluorinated Fluid

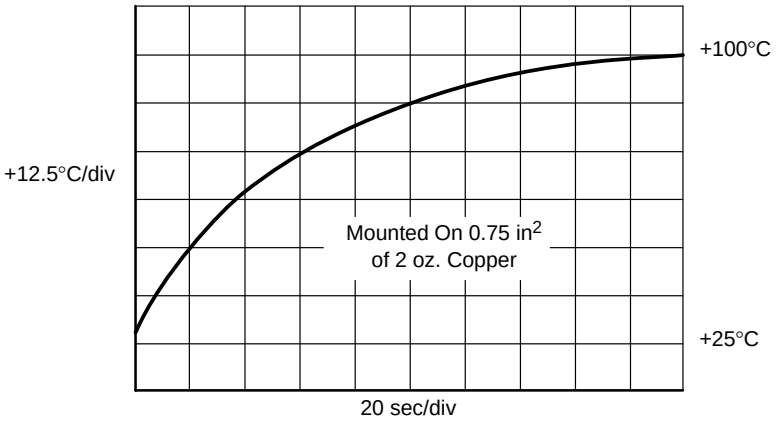

Figure 10. SOT−23 Thermal Step Response in Still Air

Component Taping Orientation for 5–Pin SOT–23A (EIAJ SC–74A) Devices

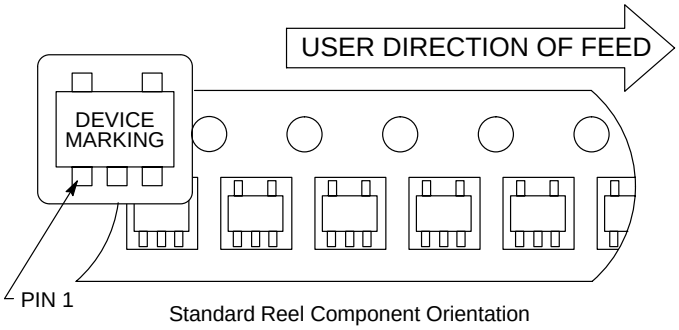

Standard Reel Component Orientation
TR Suffix Device
(Mark Right Side Up)

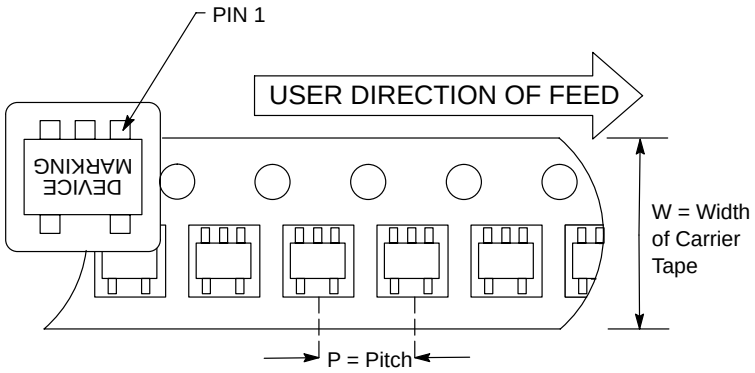

Reverse Reel Component Orientation
RT Suffix Device
(Mark Upside Down)

Carrier Tape, Reel Size, and Number of Components Per Reel

Package	Carrier Width (W)	Pitch (P)	Part Per Full Reel	Reel Size
SOT–23A	8 mm	4 mm	3000	7 inches

MARKING DIAGRAM

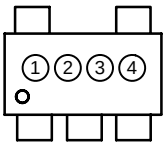

1 and 2 = Two Letter Part Number Codes
3 = Year and Two–Month Period Code
4 = Lot ID Number

ORDERING INFORMATION

Device	Package	Standard Temperature Threshold	Output Stage	Marking 1 and 2	Shipping
NCT51SN055T1	5–Pin SOT–23A	55°C	Open Drain	HB	3000 Units Tape and Reel
NCT51SN095T1		95°C	Open Drain	HF	
NCT51SN115T1		115°C	Open Drain	HH	
NCT52SN055T1		55°C	Push/Pull	JB	
NCT52SN095T1		95°C	Push/Pull	JF	
NCT52SN115T1		115°C	Push/Pull	JH	

Notes

PACKAGE DIMENSIONS

SOT−23
SN SUFFIX
CASE 1212−01
ISSUE O

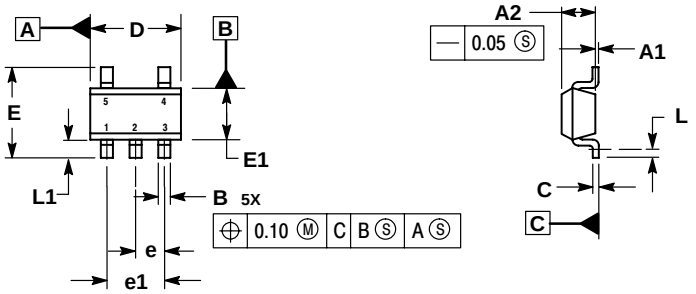

NOTES:
1. DIMENSIONS ARE IN MILLIMETERS.
2. INTERPRET DIMENSIONS AND TOLERANCES PER ASME Y14.5M, 1994.
3. DATUM C IS A SEATING PLANE.

	MILLIMETERS	
DIM	MIN	MAX
A1	0.00	0.10
A2	1.00	1.30
B	0.30	0.50
C	0.10	0.25
D	2.80	3.00
E	2.50	3.10
E1	1.50	1.80
e	0.95 BSC	
e1	1.90 BSC	
L	0.20	---
L1	0.45	0.75

PUBLICATION ORDERING INFORMATION

NORTH AMERICA Literature Fulfillment:
Literature Distribution Center for ON Semiconductor
P.O. Box 5163, Denver, Colorado 80217 USA
Phone: 303–675–2175 or 800–344–3860 Toll Free USA/Canada
Fax: 303–675–2176 or 800–344–3867 Toll Free USA/Canada
Email: ONlit@hibbertco.com
Fax Response Line: 303–675–2167 or 800–344–3810 Toll Free USA/Canada

N. American Technical Support: 800–282–9855 Toll Free USA/Canada

EUROPE: LDC for ON Semiconductor – European Support
German Phone: (+1) 303–308–7140 (Mon–Fri 2:30pm to 7:00pm CET)
Email: ONlit–german@hibbertco.com
French Phone: (+1) 303–308–7141 (Mon–Fri 2:00pm to 7:00pm CET)
Email: ONlit–french@hibbertco.com
English Phone: (+1) 303–308–7142 (Mon–Fri 12:00pm to 5:00pm GMT)
Email: ONlit@hibbertco.com

EUROPEAN TOLL–FREE ACCESS*: 00–800–4422–3781
*Available from Germany, France, Italy, UK, Ireland

CENTRAL/SOUTH AMERICA:
Spanish Phone: 303–308–7143 (Mon–Fri 8:00am to 5:00pm MST)
Email: ONlit–spanish@hibbertco.com

ASIA/PACIFIC: LDC for ON Semiconductor – Asia Support
Phone: 303–675–2121 (Tue–Fri 9:00am to 1:00pm, Hong Kong Time)
Toll Free from Hong Kong & Singapore:
001–800–4422–3781
Email: ONlit–asia@hibbertco.com

JAPAN: ON Semiconductor, Japan Customer Focus Center
4–32–1 Nishi–Gotanda, Shinagawa–ku, Tokyo, Japan 141–0031
Phone: 81–3–5740–2700
Email: r14525@onsemi.com

ON Semiconductor Website: http://onsemi.com

For additional information, please contact your local Sales Representative.