TOSHIBA Transistor Silicon NPN Epitaxial Type (Darlington power transistor)

# 2SD2536

Switching Applications

Micro Motor Drive, Hammer Drive Applications

Unit: mm

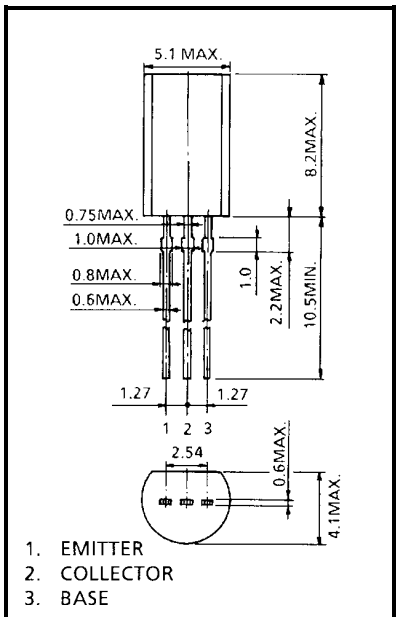


| | |
|---|---|
| JEDEC | TO-92MOD |
| JEITA | — |
| TOSHIBA | 2-5J1A |

Weight: 0.36 g (typ.)

- High DC current gain: $h_{FE}$ = 2000 (min) ($V_{CE}$ = 2 V, $I_C$ = 1 A)
- Low saturation voltage: $V_{CE\ (sat)}$ = 1.2 V (max)
  ($I_C$ = 0.7 A, $V_{BH}$ = 4.2 V)
- Zener diode included between collector and base.

## Maximum Ratings (Ta = 25°C)

| Characteristics | Symbol | Rating | Unit |
|---|---|---|---|
| Collector-base voltage | $V_{CBO}$ | 85 | V |
| Collector-emitter voltage | $V_{CEO}$ | 100 ± 15 | V |
| Emitter-base voltage | $V_{EBO}$ | 6 | V |
| Bias voltage | $V_B$ | 20 | V |
| Collector current | $I_C$ | 2 | A |
| Collector power dissipation | $P_C$ | 0.9 | W |
| Base current | $I_B$ | 0.5 | A |
| Junction temperature | $T_j$ | 150 | °C |
| Storage temperature range | $T_{stg}$ | −55 to 150 | °C |

## Equivalent Circuit

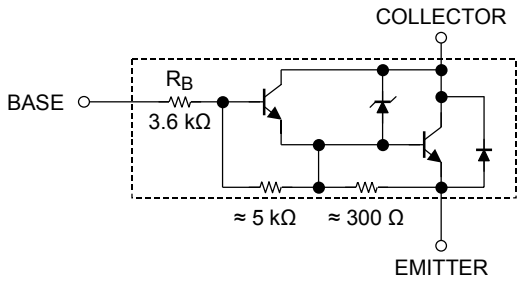

## Electrical Characteristics (Ta = 25°C)

| Characteristics | | Symbol | Test Condition | Min | Typ. | Max | Unit |
|---|---|---|---|---|---|---|---|
| Collector cut-off current | | $I_{CBO}$ | $V_{CB}$ = 80 V, $I_E$ = 0 | — | — | 10 | μA |
| Emitter cut-off current | | $I_{EBO}$ | $V_{EB}$ = 6 V, $I_C$ = 0 | 0.3 | — | 1.5 | mA |
| Collector-emitter breakdown voltage | | $V_{(BR)\ CEO}$ | $I_C$ = 10 mA, $I_B$ = 0 | 85 | 100 | 115 | V |
| Base resistance | | $R_B$ | — | 2.5 | 3.6 | 4.7 | kΩ |
| DC current gain | | $h_{FE}$ | $V_{CE}$ = 2 V, $I_C$ = 1 A | 2000 | — | — | |
| Collector-emitter saturation voltage | | $V_{CE\ (sat)\ (1)}$ | $I_C$ = 0.7 A, $V_{BH}$ = 4.2 V | — | — | 1.2 | V |
| | | $V_{CE\ (sat)\ (2)}$ | $I_C$ = 1 A, $V_{BH}$ = 4.2 V | — | — | 1.5 | |
| Input threshold voltage | | $V_{BL}$ | $V_{CE}$ = 50 V, $I_C$ = 100 μA | — | — | 0.7 | V |
| Collector output capacitance | | $C_{ob}$ | $V_{CB}$ = 10 V, $I_E$ = 0, f = 1 MHz | — | 20 | — | pF |
| Unclamped inductive load energy | | $E_{S/B}$ | L = 10 mH, $I_C$ = 1 A, $V_{BH}$ = 10 V | 5 | — | — | mJ |
| Switching time | Turn-on time | $t_r$ | 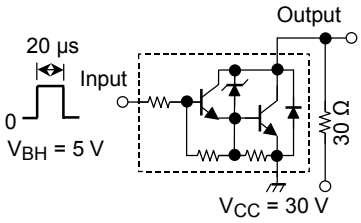  Duty cycle ≤ 1% | — | 0.3 | — | μs |
| | Storage time | $t_{stg}$ | | — | 4.0 | — | |
| | Fall time | $t_f$ | | — | 0.6 | — | |

## Marking

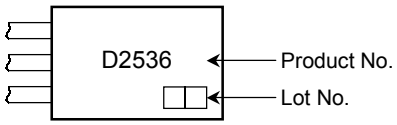


## Explanation of Lot No.

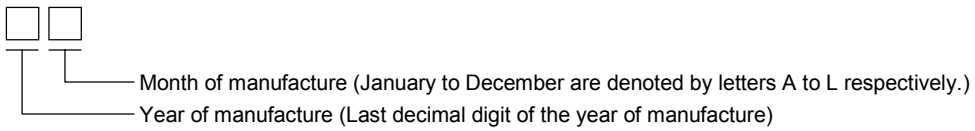

## RESTRICTIONS ON PRODUCT USE

000707EAA

- TOSHIBA is continually working to improve the quality and reliability of its products. Nevertheless, semiconductor devices in general can malfunction or fail due to their inherent electrical sensitivity and vulnerability to physical stress. It is the responsibility of the buyer, when utilizing TOSHIBA products, to comply with the standards of safety in making a safe design for the entire system, and to avoid situations in which a malfunction or failure of such TOSHIBA products could cause loss of human life, bodily injury or damage to property.
  In developing your designs, please ensure that TOSHIBA products are used within specified operating ranges as set forth in the most recent TOSHIBA products specifications. Also, please keep in mind the precautions and conditions set forth in the “Handling Guide for Semiconductor Devices,” or “TOSHIBA Semiconductor Reliability Handbook” etc..
- The TOSHIBA products listed in this document are intended for usage in general electronics applications (computer, personal equipment, office equipment, measuring equipment, industrial robotics, domestic appliances, etc.). These TOSHIBA products are neither intended nor warranted for usage in equipment that requires extraordinarily high quality and/or reliability or a malfunction or failure of which may cause loss of human life or bodily injury (“Unintended Usage”). Unintended Usage include atomic energy control instruments, airplane or spaceship instruments, transportation instruments, traffic signal instruments, combustion control instruments, medical instruments, all types of safety devices, etc.. Unintended Usage of TOSHIBA products listed in this document shall be made at the customer’s own risk.
- The information contained herein is presented only as a guide for the applications of our products. No responsibility is assumed by TOSHIBA CORPORATION for any infringements of intellectual property or other rights of the third parties which may result from its use. No license is granted by implication or otherwise under any intellectual property or other rights of TOSHIBA CORPORATION or others.
- The information contained herein is subject to change without notice.