SGS-THOMSON MICROELECTRONICS

TL7700 A Series

SUPPLY VOLTAGE SUPERVISORS

- POWER-ON RESET GENERATOR
- AUTOMATIC RESET GENERATION AFTER VOLTAGE DROP
- WIDE SUPPLY VOLTAGE RANGE ... 3V TO 18V
- PRECISION VOLTAGE SENSOR
- TEMPERATURE-COMPENSATED VOLTAGE REFERENCE
- TRUE AND COMPLEMENT RESET OUTPUTS
- EXTERNALLY ADJUSTABLE PULSE WIDTH

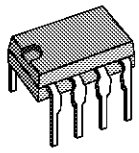

N
Minidip

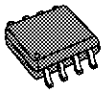

D
SO8

DESCRIPTION

The TL7700A series are monolithic integrated circuit supply voltage supervisors specifically desi-gned for use as reset controllers in microcomputer and microprocessor systems. During power-up the device tests the supply voltage and keeps the RESET and RESET outputs active (high and low, respectively) as long as the supply voltage has not reached its nominal voltage value. Taking RESIN low has the same effect. To ensure that the microcomputer system has reset, the TL7700A then initiates an internal time delay that delays the return of the reset outputs to their inactive states. Since the time delay for most microcomputers and microprocessors is in the order of several machine cycles, the device internal time delay is determined by an external time delay is determined by an external capacitor connected to the C_T input (pin 3).

$t_d = 1.3 \times 10^4 \times C_T$

Where : C_T is in farads (F) and t_d in seconds (s). In addition, when the supply voltage drops below the nominal value, the outputs will be active until the supply voltage returns to the nominal value. An external capacitor (typically 0.1 µF) must be connected to the REF output (pin 1) to reduce the influence of fast transients in the supply voltage.

The TL7700AI series is characterized for operation from – 25°C to 85°C ; the TL7700AC series is characterized from 0°C to 70°C.

ORDERING NUMBERS

Temperature Range	Minidip	S08
0 to 70°C	TL77XXACP	TL77XXACD
-25 to 85°C	TL77XXAIP	TL77XXAID

PIN CONNECTION (top view)

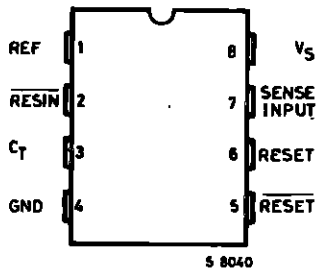

BLOCK DIAGRAM

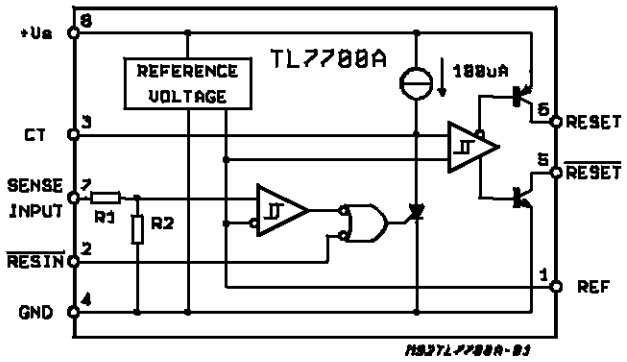

* TL7702A R1 = 0Ω, R2 = open ; TL7705A R1 = 7.8 KΩ, R2 = 10kΩ ; TL7709A R1 = 19.7 KΩ, R2 = 10kΩ ; TL7712A R1 = 32.7kΩ, R2 = 10kΩ ; TL7715A R1 = 43.4 KΩ, R2 = 10kΩ.

ABSOLUTE MAXIMUM RATINGS

Symbol	Parameter		Value	Unit
V_S	Supply Voltage, V_{CC} - (see note 1)		20	V
V_i	Input Voltage Range at $\overline{RESIN}$		-0.3 to 20	V
V_i	Input Voltage at SENSE :	TL7702A (see note 2) TL7705A TL7709A TL7712A TL7715A	-0.3 to 6 -0.3 to 10 -0.3 to 15 -0.3 to 20 -0.3 to 20	V
I_{OH}	High-level Output Current at RESET		-30	mA
I_{OL}	Low-level Output Current at $\overline{RESET}$		30	mA
T_{amb}	Operating Free-air Temperature Range :	TL77XXAI TL77XXAC	-25 to 85 0 to 70	^oC
T_{stg}	Storage Temperature Range		-65 to 150	^oC

Notes : 1. All voltage values are with respect to the network ground terminal
2. For the TL7700A, the voltage applied to the SENSE terminal must never exceed V_s.

THERMAL DATA

Symbol	Parameter		Value	Unit
$R_{th\ j\text{-}amb}$	Thermal Resistance Junction-ambient	Max.	120	$^oC/W$

RECOMMENDED OPERATING CONDITIONS

Symbol	Parameter		Min.	Max.	Unit
V_S	Supply Voltage		3.6	18	V
V_{IH}	High-level Input Voltage at RESIN		2		V
V_{IL}	Low-level Input Voltage at RESIN			0.6	V
V_i	Voltage at Sense Input	TL7702A TL7705A TL7709A TL7712A TL7715A	0 0 0 0 0	See note 3 10 15 20 20	V
I_{OH}	High-level Output Current at RESET			-16	mA
I_{OL}	Low-level Output Current at $\overline{RESET}$			16	mA
T_{amb}	Operating Free-air Temperature Range	TL77-AI TL77-AC	-25 0	85 70	^oC

Note : 3. For proper operation of the TL7702A, the voltage applied to the SENSE terminal should not exceed V_s - 1V or 6V, which ever is less.

ELECTRICAL CHARACTERISTICS these specifications unless otherwise specified, apply for :
T_{amb} = –25 to 85°C (TLXXAI), T_{amb} = 0 to 70°C (TL77XXAC)

Symbol	Parameter		Test Conditions (1)	Min.	Typ.	Max.	Unit
V_{OH}	High-level Output Voltage at RESET		I_{OH} = –16mA	V_s - 1.5			V
V_{OL}	Low-Level Output Voltage at $\overline{RESET}$		I_{OL} = 16mA		0.4		V
V_{ref}	Reference Voltage		T_{amb} = 25°C	2.48	2.53	2.58	V
V_T	Threshold Voltage at SENSE Input	TL7702A TL7705A TL7709A TL7712A TL7715A	V_s = 3.6V to 18V T_{amb} = 25°C	2.48 4.5 7.5 10.6 13.2	2.53 4.55 7.6 10.8 13.5	2.58 4.6 7.7 11 13.8	V
V_T	Threshold Voltage at SENSE Inpu	TL7702A TL7705A TL7709A TL7712A TL7715At	V_s = 3.6V to 18V	2.45 4.45 7.4 10.4 13	2.53 4.55 7.6 10.8 13.5	2.58 4.6 7.7 11 13.8	V
V_{T+}, V_{T-}	Hysteresis (2) at SENSE Input	TL7702A TL7705A TL7709A TL7712A TL7715A	V_s = 3.6V to 18V T_{amb} = 25°C		10 15 20 35 45		mV
I_I	Input Current at $\overline{RESIN}$ Input		V_i = 2.4V to V_S V_i = 0.4V		20 -100		µA
I_I	Input Current at SENSE Input	TL7702A	$V_{ref} < V_i < V_s$ - 1.5V		0.5	2	µA
I_{OH}	High-level Output Current at $\overline{RESET}$		V_O = 18V		50		µA
I_{OL}	Low-level Output Current at RESET		V_O = 0V		-50		µA
I_S	Supply Current		All Inputs and out. open		1.8	3.3	mA

Notes : 1. All characteristics are measured with C = 0.1µF from Pin 1 to GND, and with C = 0.1µF from Pin 3 to GND.
2. Hysteresis is the difference between the positive going input threshold voltage. V_{T+}, and the negative going input threshold voltage, V_{T-}.

SWITCHING CHARACTERISTICS

Symbol	Parameter	Test Conditions	Min.	Typ.	Max.	Unit
t_{pi}	Pulse Width at SENSE Input	$V_{ih} = V_{ityp}$ +0.04 x V_i $V_{iL} = V_{ityp}$ –0.04 x V_i	0.9			µs
t_{pi}	Pulse Width at $\overline{RESIN}$ Input		0.4			µs
t_{po}	Pulse Width at Output	C_f = 0.1µF	0.65	1.3	2.6	ms
t_{pdHL}	Propagation Delay Time from $\overline{RESIN}$ to $\overline{RESET}$	C_L = 100pF, V_s = 5V, R_L = 4.7kΩ			1	µs
$t_{r/f}$	Rise/Falltime at RESET and $\overline{RESET}$	C_L = 10pF, V_s = 5V, R_L = 4.7kΩ			1	µs

Figure 1 : Multiple Power Supply System Reset Generation

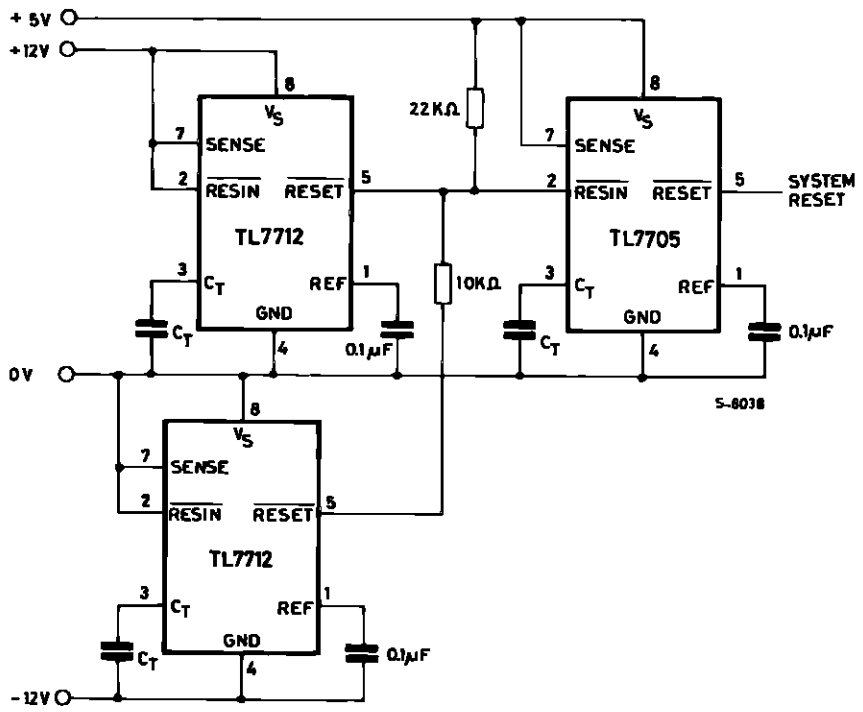

Figure 2 : Reset Controller for µP

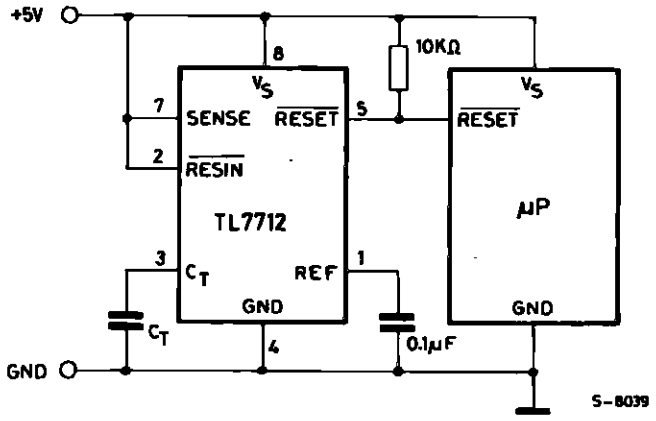

SO8 PACKAGE MECHANICAL DATA

DIM.	mm			inch		
	MIN.	TYP.	MAX.	MIN.	TYP.	MAX.
A			1.75			0.069
a1	0.1		0.25	0.004		0.010
a2			1.65			0.065
a3	0.65		0.85	0.026		0.033
b	0.35		0.48	0.014		0.019
b1	0.19		0.25	0.007		0.010
C	0.25		0.5	0.010		0.020
c1	45° (typ.)					
D	4.8		5.0	0.189		0.197
E	5.8		6.2	0.228		0.244
e		1.27			0.050	
e3		3.81			0.150	
F	3.8		4.0	0.15		0.157
L	0.4		1.27	0.016		0.050
M			0.6			0.024
S	8° (max.)					

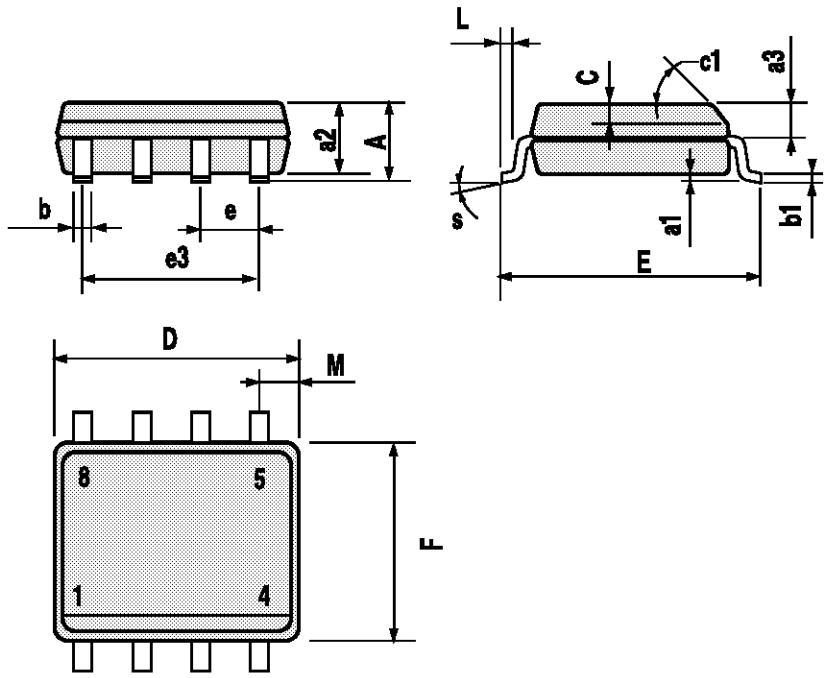

MINIDIP PACKAGE MECHANICAL DATA

DIM.	mm			inch		
	MIN.	TYP.	MAX.	MIN.	TYP.	MAX.
A		3.32			0.131	
a1	0.51			0.020		
B	1.15		1.65	0.045		0.065
b	0.356		0.55	0.014		0.022
b1	0.204		0.304	0.008		0.012
D			10.92			0.430
E	7.95		9.75	0.313		0.384
e		2.54			0.100	
e3		7.62			0.300	
e4		7.62			0.300	
F			6.6			0.260
I			5.08			0.200
L	3.18		3.81	0.125		0.150
Z			1.52			0.060