SGS-THOMSON MICROELECTRONICS

BU208D/508D/508DFI

HIGH VOLTAGE FASTSWITCHING NPN POWER TRANSISTOR

- SGS-THOMSON PREFERRED SALESTYPES
- HIGH VOLTAGE CAPABILITY
- U.L. RECOGNISED ISOWATT218 PACKAGE (U.L. FILE # E81734 (N)
- JEDEC TO-3 METAL CASE
- NPN TRANSISTOR WITH INTEGRATED FREEWHEELING DIODE

APPLICATIONS:

- HORIZONTAL DEFLECTION FOR COLOUR TV

DESCRIPTION

The BU208D, BU508D and BU508DFI are manufactured using Multiepitaxial Mesa technology for cost-effective high performance and uses a Hollow Emitter structure to enhance switching speeds.

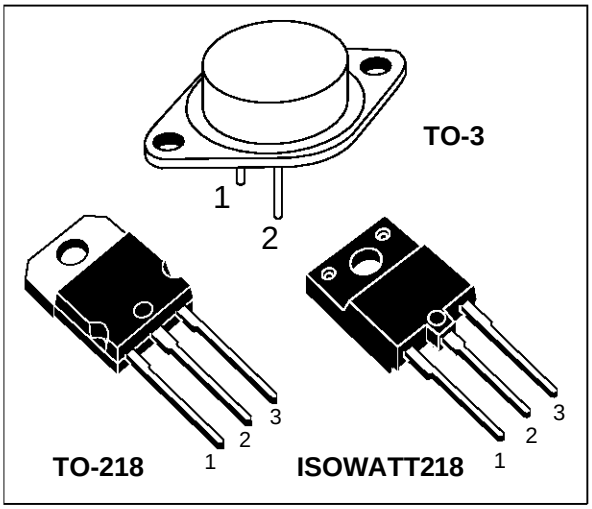

INTERNAL SCHEMATIC DIAGRAM

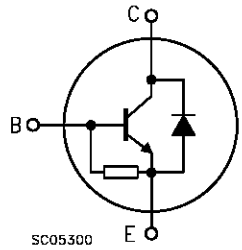

ABSOLUTE MAXIMUM RATINGS

Symbol	Parameter	Value			Unit
V_{CES}	Collector-Emitter Voltage (V_{BE} = 0)	1500			V
V_{CEO}	Collector-Emitter Voltage (I_B = 0)	700			V
V_{EBO}	Emitter-Base Voltage (I_C = 0)	10			V
I_C	Collector Current	8			A
I_{CM}	Collector Peak Current (t_p < 5 ms)	15			A
		TO - 3	**TO - 218**	**ISOWATT218**	
P_{tot}	Total Dissipation at T_c = 25 ^oC	150	125	50	W
T_{stg}	Storage Temperature	-65 to 150	-65 to 150	-65 to 150	^oC
T_j	Max. Operating Junction Temperature	150	150	150	^oC

THERMAL DATA

		TO-3	TO-218	ISOWATT218	
$R_{thj-case}$	Thermal Resistance Junction-case Max	1	1	2.5	^{o}C/W

ELECTRICAL CHARACTERISTICS (T_{case} = 25 ^{o}C unless otherwise specified)

Symbol	Parameter	Test Conditions	Min.	Typ.	Max.	Unit
I_{CES}	Collector Cut-off Current (V_{BE} = 0)	V_{CE} = 1500 V V_{CE} = 1500 V T_j = 125 ^{o}C			1 2	mA mA
I_{EBO}	Emitter Cut-off Current (I_C = 0)	V_{EB} = 5 V			300	mA
$V_{CE(sat)}$*	Collector-Emitter Saturation Voltage	I_C = 4.5 A I_B = 2 A			1	V
$V_{CEO(sus)}$	Collector-Emitter Sustaining Voltage	I_C = 100 m A	700			V
$V_{BE(sat)}$*	Base-Emitter Saturation Voltage	I_C = 4.5 A I_B = 2 A			1.3	V
t_s t_f	INDUCTIVE LOAD Storage Time Fall Time	I_C = 4.5 A h_{FE} = 2.5 V_{CC} = 140 V L_C = 0.9 mH L_B = 3 µH		7 550		µs ns
V_F	Diode Forward Voltage	I_F = 4 A			2	V
f_T	Transition Frequency	I_C = 0.1 A V_{CE} = 5 V f = 5 MHz		7		MHz

* Pulsed: Pulse duration = 300 µs, duty cycle 1.5 %

Safe Operating Area (TO-3)

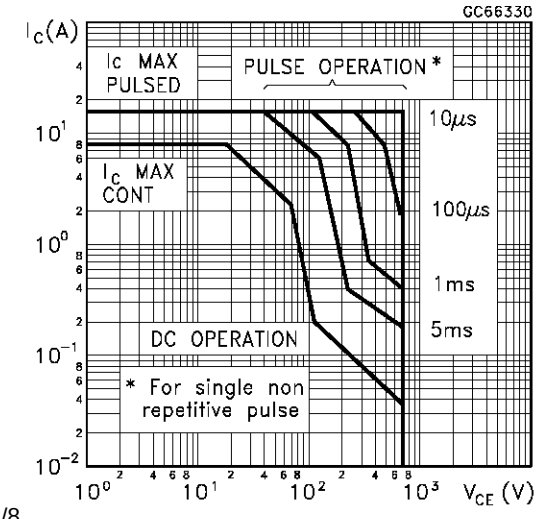

Safe Operating Area (TO-218/ISOWATT218)

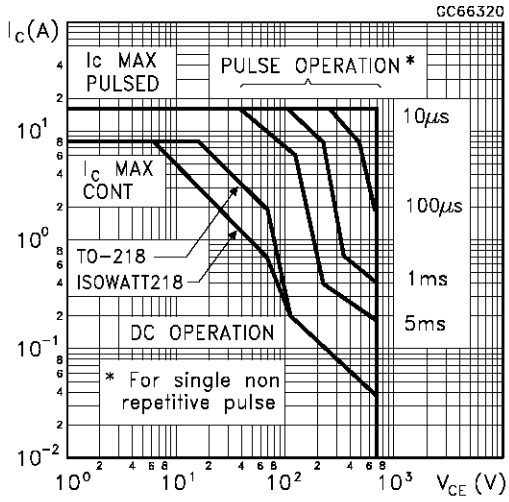

DC Current Gain

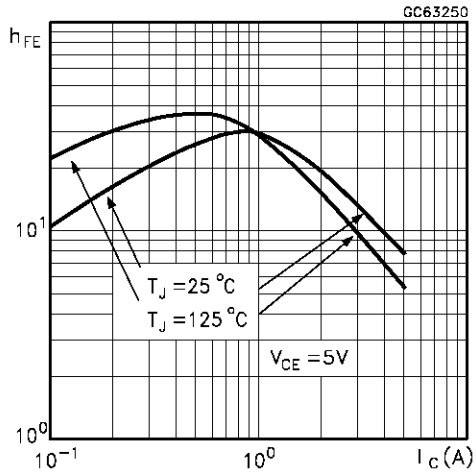

Collector Emitter Saturation Voltage

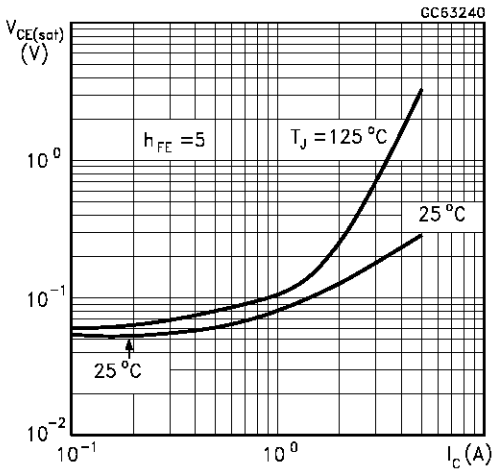

Base Emitter Saturation Voltage

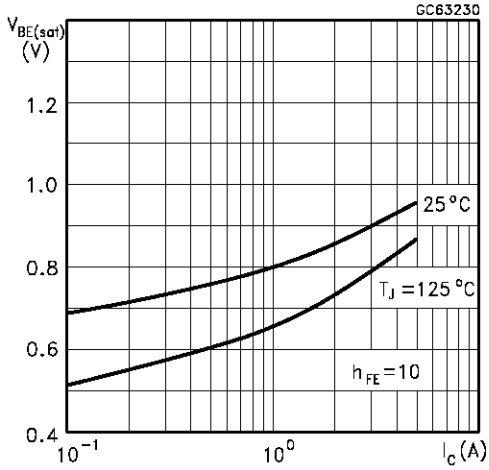

Switching Time Inductive Load

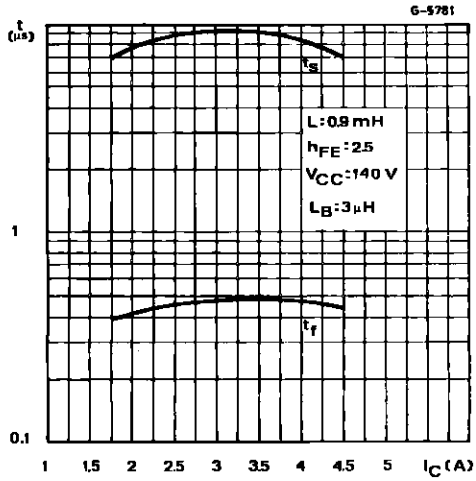

Switching Time Inductive Load (see figure 1)

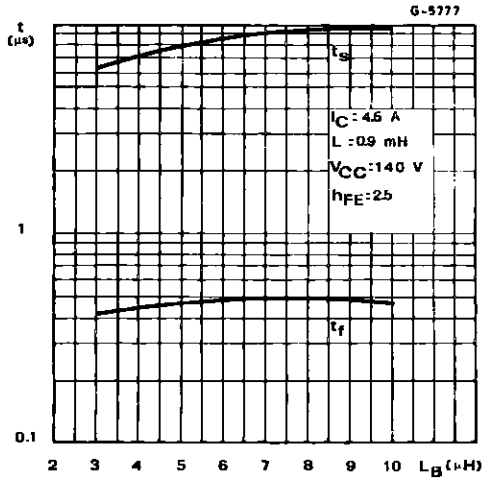

Switching Time Percentance vs. Case

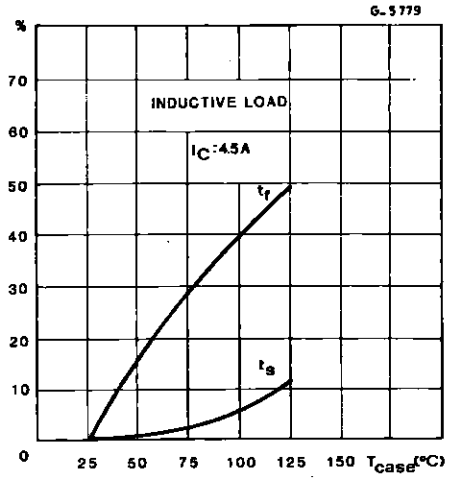

Figure 1: Inductive Load Switching Test Circuits

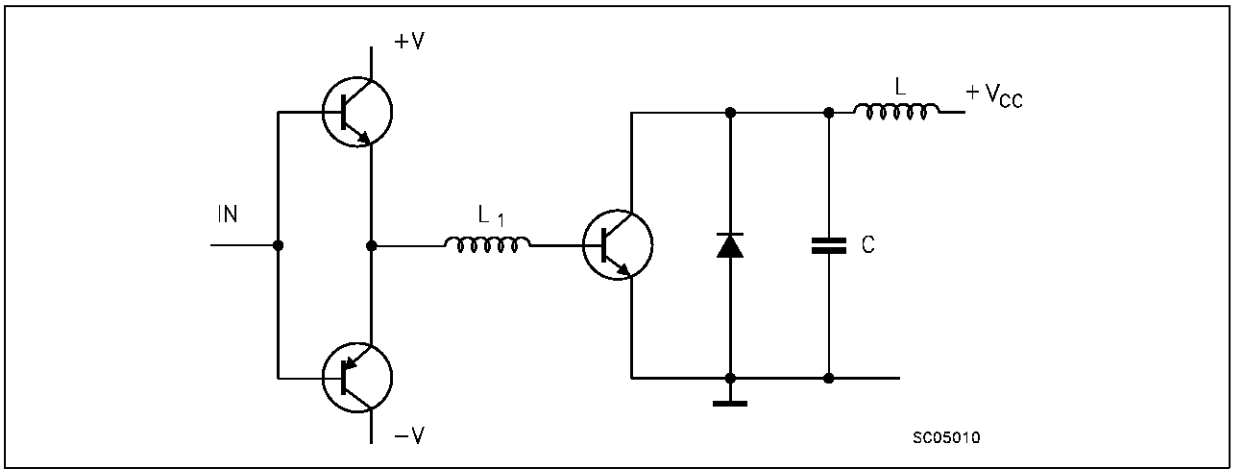

TO-3 (H) MECHANICAL DATA

DIM.	mm			inch		
	MIN.	TYP.	MAX.	MIN.	TYP.	MAX.
A		11.7			0.460	
B	0.96		1.10	0.037		0.043
C			1.70			0.066
D			8.7			0.342
E			20.0			0.787
G		10.9			0.429	
N		16.9			0.665	
P			26.2			1.031
R	3.88		4.09	0.152		0.161
U			39.50			1.555
V		30.10			1.185	

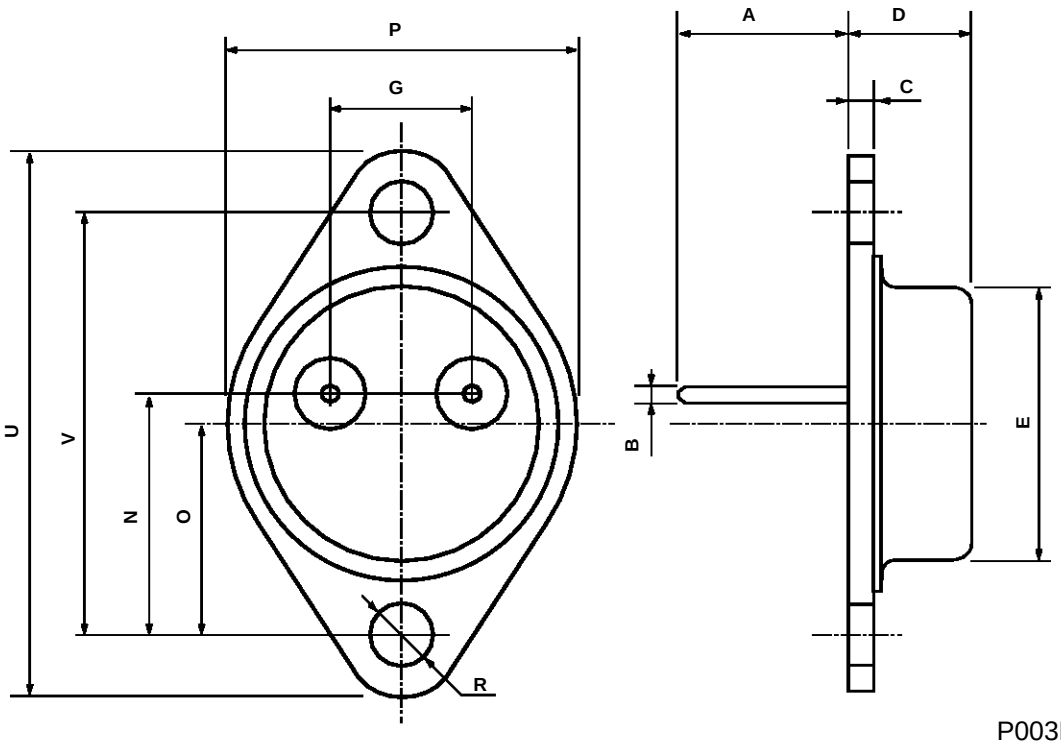

P003N

TO-218 (SOT-93) MECHANICAL DATA

DIM.	mm			inch		
	MIN.	TYP.	MAX.	MIN.	TYP.	MAX.
A	4.7		4.9	0.185		0.193
C	1.17		1.37	0.046		0.054
D		2.5			0.098	
E	0.5		0.78	0.019		0.030
F	1.1		1.3	0.043		0.051
G	10.8		11.1	0.425		0.437
H	14.7		15.2	0.578		0.598
L2	–		16.2	–		0.637
L3		18			0.708	
L5	3.95		4.15	0.155		0.163
L6		31			1.220	
R	–		12.2	–		0.480
Ø	4		4.1	0.157		0.161

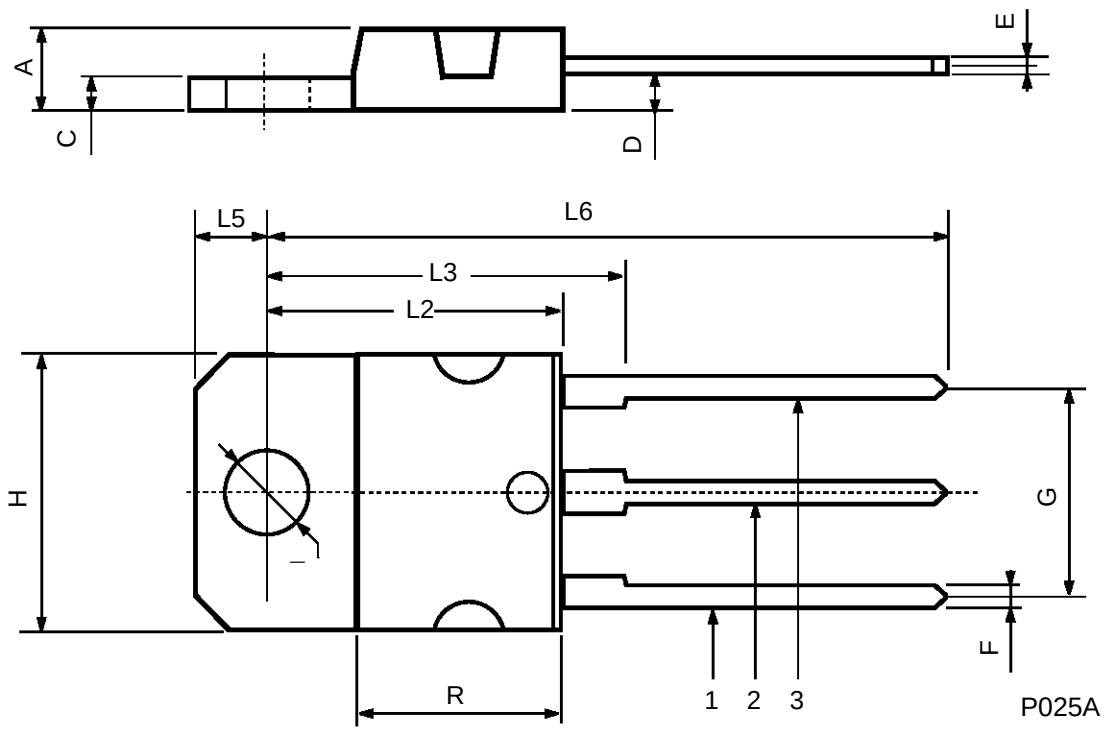

ISOWATT218 MECHANICAL DATA

DIM.	mm			inch		
	MIN.	TYP.	MAX.	MIN.	TYP.	MAX.
A	5.35		5.65	0.210		0.222
C	3.3		3.8	0.130		0.149
D	2.9		3.1	0.114		0.122
D1	1.88		2.08	0.074		0.081
E	0.45		1	0.017		0.039
F	1.05		1.25	0.041		0.049
G	10.8		11.2	0.425		0.441
H	15.8		16.2	0.622		0.637
L1	20.8		21.2	0.818		0.834
L2	19.1		19.9	0.752		0.783
L3	22.8		23.6	0.897		0.929
L4	40.5		42.5	1.594		1.673
L5	4.85		5.25	0.190		0.206
L6	20.25		20.75	0.797		0.817
M	3.5		3.7	0.137		0.145
N	2.1		2.3	0.082		0.090
U		4.6			0.181	

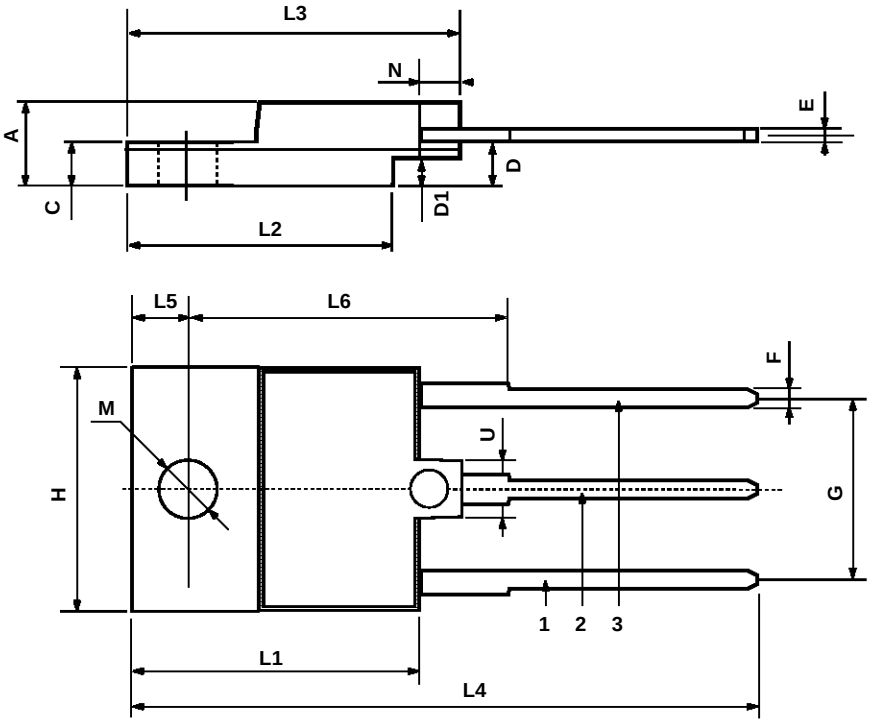

P025C

Information furnished is believed to be accurate and reliable. However, SGS-THOMSON Microelectronics assumes no responsability for the consequences of use of such information nor for any infringement of patents or other rights of third parties which may results from its use. No license is granted by implication or otherwise under any patent or patent rights of SGS-THOMSON Microelectronics. Specifications mentioned in this publication are subject to change without notice. This publication supersedes and replaces all information previously supplied. SGS-THOMSON Microelectronics products are not authorized for use as critical components in life support devices or systems without express written approval of SGS-THOMSON Microelectronics.

© 1996 SGS-THOMSON Microelectronics - Printed in Italy - All Rights Reserved

SGS-THOMSON Microelectronics GROUP OF COMPANIES
Australia - Brazil - Canada - China - France - Germany - Hong Kong - Italy - Japan - Korea - Malaysia - Malta - Morocco - The Netherlands - Singapore - Spain - Sweden - Switzerland - Taiwan - Thailand - United Kingdom - U.S.A