HA13118

18 W BTL Audio Power Amplifier

HITACHI

ADE-207-329 (Z)

1st Edition
Dec. 2000

Description

The HA13118 is power IC designed for component car stereo amplifiers. At 13.2 V to 4 Ω load, this power IC provides an output power of 18W with 10% distortion.

It is easy to design as this IC employs internal each protection circuit and the new small package.

Features

- Small outline package, easy to mount
- Internal each protection circuits
  - Surge protection circuit
  - Thermal shut-down circuit
  - Ground fault protection circuit
  - Power supply fault protection circuit

Absolute Maximum Ratings (Ta = 25°C)

Item	Symbol	Rating	Unit	Note
Operating supply voltage	V_{CC}	18	V	
DC supply voltage	V_{CC} (DC)	26	V	1
Peak supply voltage	V_{CC} (peak)	50	V	2
Output current	Io (peak)	4	A	
Power dissipation	P_T	15	W	
Thermal resistance	θj – c	3.5	°C/W	
Junction temperature	Tj	150	°C	
Operating temperature	Topr	–30 to +80	°C	
Storage temperature	Tstg	–55 to +125	°C	

Notes: 1. Value at t = 30 sec.
2. Value at width tw = 200 ms and rise time tr = 1 ms.

Hitachi semiconductor

Electrical Characteristics (V_{CC} = 13.2 V, f = 1 kHz, R_L = 4 Ω, Ta = 25 °C)

Item	Symbol	Min	Typ	Max	Unit	Test Conditions	
Quiescent current	I_Q	40	80	160	mA	Vin = 0	
Input bias voltage	V_B	—	20	40	mV	Vin = 0	
Output offset voltage	ΔV_Q	—	—	+330	mV	Vin = 0	
Voltage gain	G_V	53	55	57	dB	Vin = –55 dBm	
Output power	Pout	15	18	—	W	THD = 10 %	R_L = 4 Ω
		—	11	—			R_L = 8 Ω
Total harmonic distortion	THD	—	0.2	1.0	%	Pout = 1.5 W	
Output noise voltage	WBN	—	1.0	2.0	mV	Rg = 10 kΩ, BW = 20 Hz 20 kHz	
Supply voltage rejection ratio	SVR	33	44	—	dB	f = 500 Hz	
Input resistance	Rin	20	30	40	kΩ		
Rolloff frequency	f_L	—	20	—	Hz	ΔGv = –3 dB	Low
	f_H	10	20	40	kHz	from f = 1 kHz Ref.	High

Block Diagram

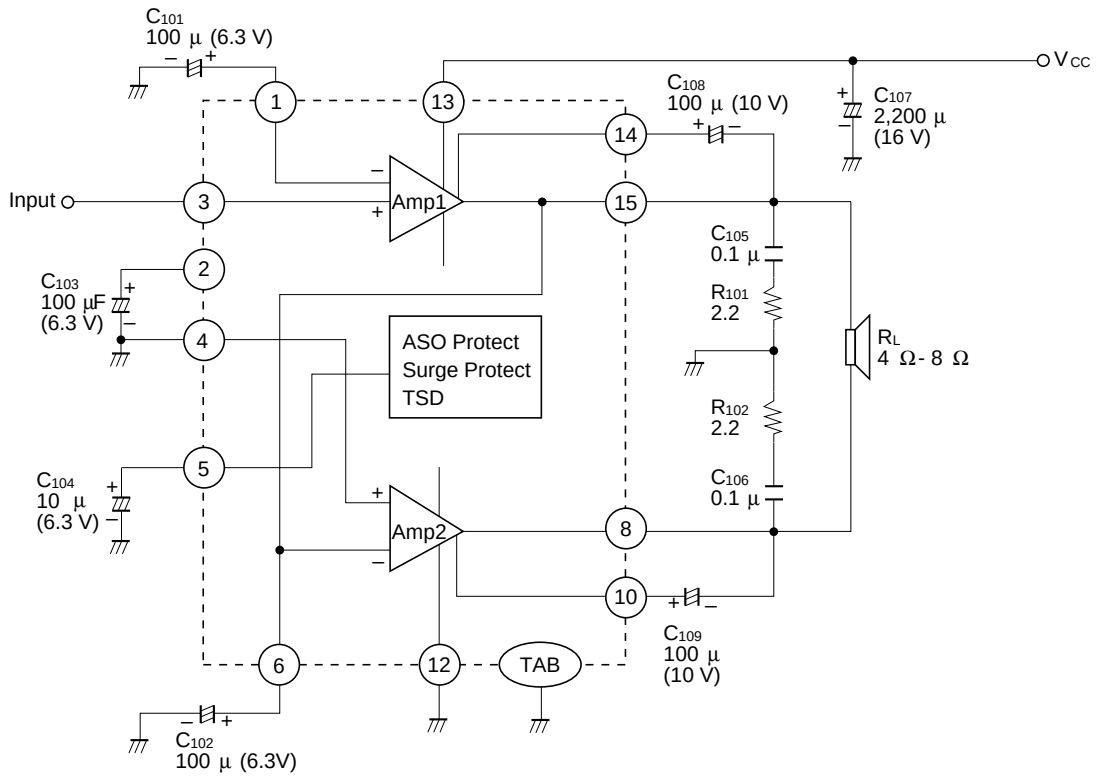

Note: C_{105}, C_{106} must be non secondary resonance type (non inductive) polyester film capacitor for keeping stability.

Figure 1 Typical Application Circuit

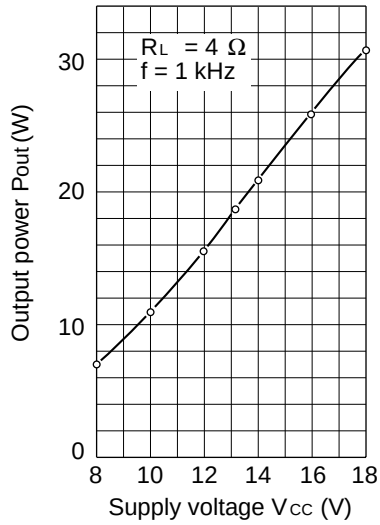

Figure 2 Output Power vs. Supply Voltage

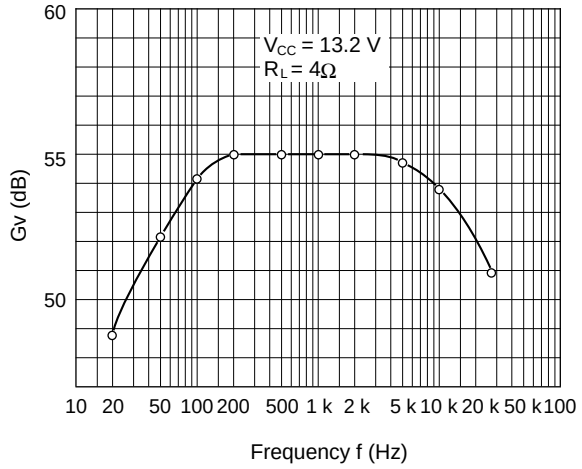

Figure 3 Voltage Gain vs. Frequency

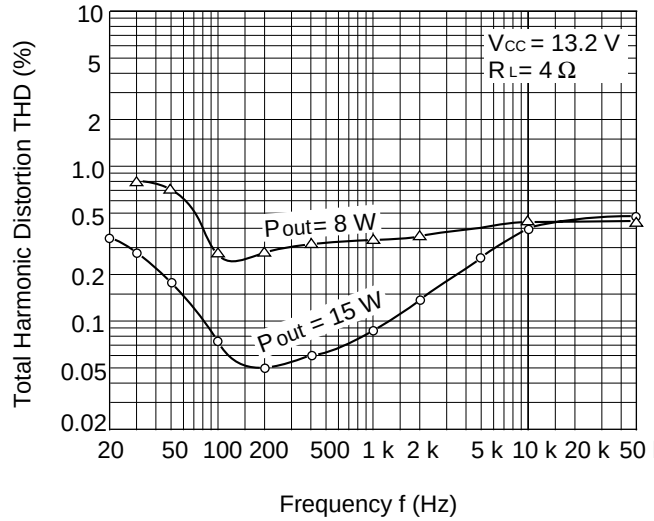

Figure 4 Total Harmonic Distortion vs. Frequency

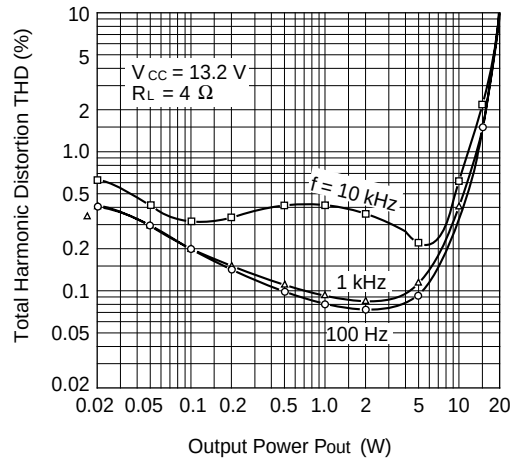

Figure 5 Total Harmonic Distortion vs. Output Power

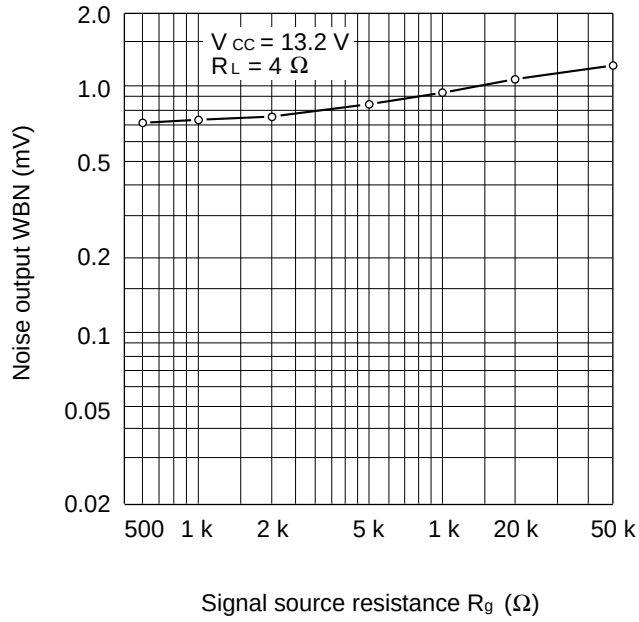

Figure 6 Noise Output vs. Signal Source Resistance

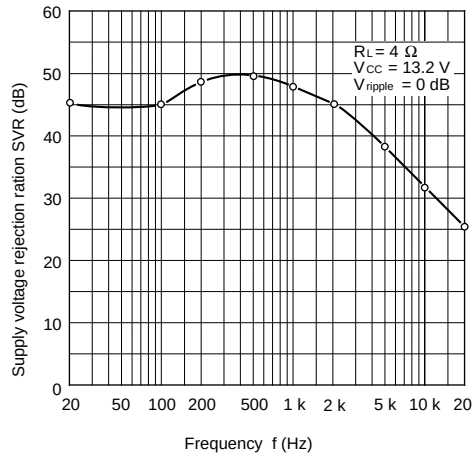

Figure 7 Supply Voltage Rejection Ratio vs. Frequency

Package Dimensions

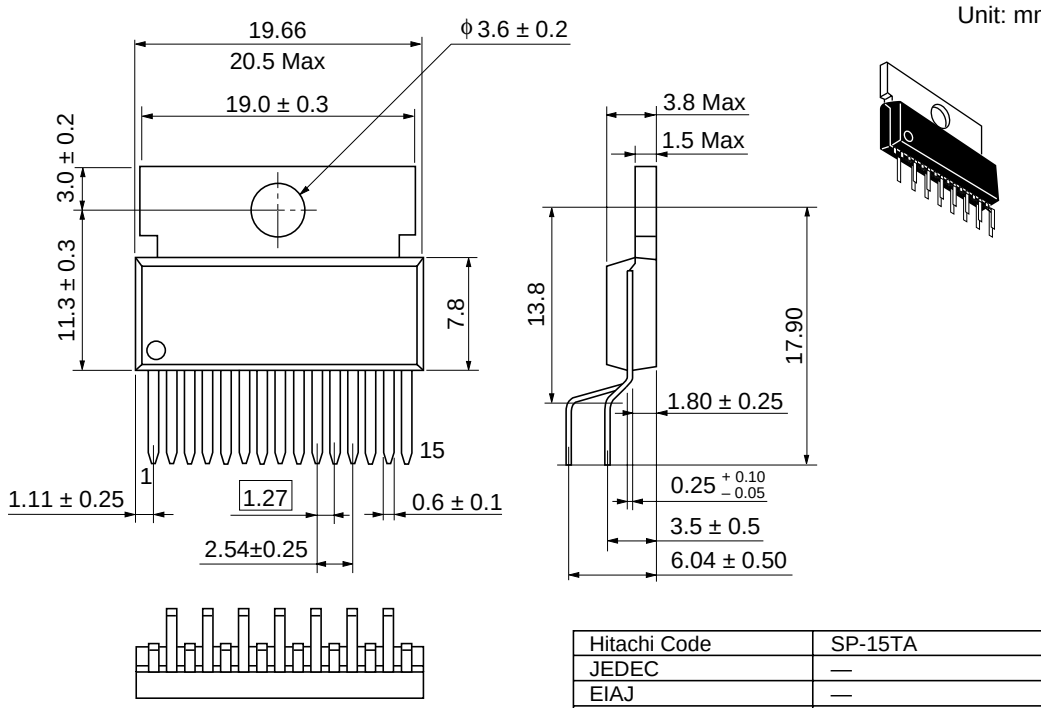

Hitachi Code	SP-15TA
JEDEC	—
EIAJ	—
Mass (reference value)	3.10 g

Disclaimer

1. Hitachi neither warrants nor grants licenses of any rights of Hitachi's or any third party's patent, copyright, trademark, or other intellectual property rights for information contained in this document. Hitachi bears no responsibility for problems that may arise with third party's rights, including intellectual property rights, in connection with use of the information contained in this document.
2. Products and product specifications may be subject to change without notice. Confirm that you have received the latest product standards or specifications before final design, purchase or use.
3. Hitachi makes every attempt to ensure that its products are of high quality and reliability. However, contact Hitachi's sales office before using the product in an application that demands especially high quality and reliability or where its failure or malfunction may directly threaten human life or cause risk of bodily injury, such as aerospace, aeronautics, nuclear power, combustion control, transportation, traffic, safety equipment or medical equipment for life support.
4. Design your application so that the product is used within the ranges guaranteed by Hitachi particularly for maximum rating, operating supply voltage range, heat radiation characteristics, installation conditions and other characteristics. Hitachi bears no responsibility for failure or damage when used beyond the guaranteed ranges. Even within the guaranteed ranges, consider normally foreseeable failure rates or failure modes in semiconductor devices and employ systemic measures such as fail-safes, so that the equipment incorporating Hitachi product does not cause bodily injury, fire or other consequential damage due to operation of the Hitachi product.
5. This product is not designed to be radiation resistant.
6. No one is permitted to reproduce or duplicate, in any form, the whole or part of this document without written approval from Hitachi.
7. Contact Hitachi's sales office for any questions regarding this document or Hitachi semiconductor products.

Sales Offices

HITACHI

Hitachi, Ltd.
Semiconductor & Integrated Circuits.
Nippon Bldg., 2-6-2, Ohte-machi, Chiyoda-ku, Tokyo 100-0004, Japan
Tel: Tokyo (03) 3270-2111 Fax: (03) 3270-5109

URL	NorthAmerica	:	http://semiconductor.hitachi.com/
	Europe	:	http://www.hitachi-eu.com/hel/ecg
	Asia	:	http://sicapac.hitachi-asia.com
	Japan	:	http://www.hitachi.co.jp/Sicd/indx.htm

For further information write to:

Hitachi Semiconductor (America) Inc.
179 East Tasman Drive,
San Jose,CA 95134
Tel: <1> (408) 433-1990
Fax: <1>(408) 433-0223

Hitachi Europe GmbH
Electronic Components Group
Dornacher Straße 3
D-85622 Feldkirchen, Munich
Germany
Tel: <49> (89) 9 9180-0
Fax: <49> (89) 9 29 30 00

Hitachi Europe Ltd.
Electronic Components Group.
Whitebrook Park
Lower Cookham Road
Maidenhead
Berkshire SL6 8YA, United Kingdom
Tel: <44> (1628) 585000
Fax: <44> (1628) 585160

Hitachi Asia Ltd.
Hitachi Tower
16 Collyer Quay #20-00,
Singapore 049318
Tel : <65>-538-6533/538-8577
Fax : <65>-538-6933/538-3877
URL : http://www.hitachi.com.sg

Hitachi Asia Ltd.
(Taipei Branch Office)
4/F, No. 167, Tun Hwa North Road,
Hung-Kuo Building,
Taipei (105), Taiwan
Tel : <886>-(2)-2718-3666
Fax : <886>-(2)-2718-8180
Telex : 23222 HAS-TP
URL : http://www.hitachi.com.tw

Hitachi Asia (Hong Kong) Ltd.
Group III (Electronic Components)
7/F., North Tower,
World Finance Centre,
Harbour City, Canton Road
Tsim Sha Tsui, Kowloon,
Hong Kong
Tel : <852>-(2)-735-9218
Fax : <852>-(2)-730-0281
URL : http://www.hitachi.com.hk

Copyright © Hitachi, Ltd., 2000. All rights reserved. Printed in Japan.
Colophon 2.0