HD74ALVC2G245

Dual Bus Transceivers with 3-state Output

REJ03D0176–0400Z
(Previous ADE-205-641C (Z))
Rev.4.00
Dec.18.2003

Description

The HD74ALVC2G245 has two buffers with three state output in an 8 pin package. When DIR is high, data is transferred from the A inputs to the B outputs, and when DIR is low, data is transferred from the B inputs to the A outputs. The A and B buses are separated by making the enable input ($\overline{OE}$) high level. Low voltage and high-speed operation is suitable for the battery powered products (e.g., notebook computers), and the low power consumption extends the battery life.

Features

- The basic gate function is lined up as Renesas uni logic series.
- Supplied on emboss taping for high-speed automatic mounting.
- Supply voltage range : 1.2 to 3.6 V
  Operating temperature range: –40 to +85°C
- All inputs V_{IH} (Max.) = 3.6 V (@V_{CC} = 0 V to 3.6 V)
  All outputs V_O (Max.) = 3.6 V (@V_{CC} = 0 V)
- Output current ±2 mA (@V_{CC} = 1.2 V)
  ±4 mA (@V_{CC} = 1.4 V to 1.6 V)
  ±6 mA (@V_{CC} = 1.65 V to 1.95 V)
  ±18 mA (@V_{CC} = 2.3 V to 2.7 V)
  ±24 mA (@V_{CC} = 3.0 V to 3.6 V)
- Ordering Information

Part Name	Package Type	Package Code	Package Abbreviation	Taping Abbreviation (Quantity)
HD74ALVC2G245USE	SSOP-8 pin	TTP-8DBV	US	E (3,000 pcs/reel)

Outline and Article Indication

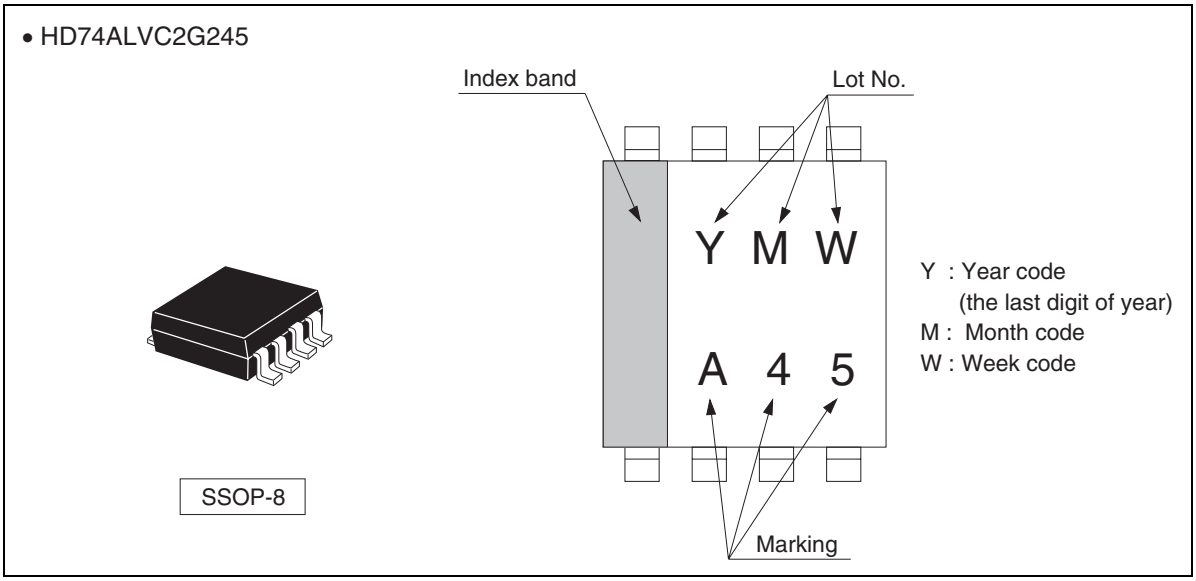

Function Table

Inputs

$\overline{OE}$	DIR	Operation
L	L	B data to A bus
L	H	A data to B bus
H	X	Isolation

H: High level
L: Low level
X: Immaterial

Pin Arrangement

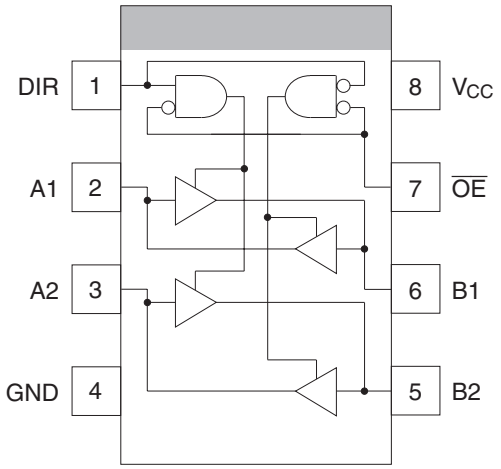

(Top view)

Absolute Maximum Ratings

Item	Symbol	Ratings	Unit	Conditions
Supply voltage range	V_{CC}	–0.5 to 4.6	V	
Input voltage range *1	V_I	–0.5 to 4.6	V	
Output voltage range *1, 2	V_O	–0.5 to V_{CC}+0.5	V	Output : H or L or Z
		–0.5 to 4.6		V_{CC} : OFF
Input clamp current	I_{IK}	–50	mA	$V_I < 0$
Output clamp current	I_{OK}	±50	mA	$V_O < 0$ or $V_O > V_{CC}$
Continuous output current	I_O	±50	mA	V_O = 0 to V_{CC}
Continuous current through V_{CC} or GND	I_{CC} or I_{GND}	±100	mA	
Maximum power dissipation at Ta = 25°C (in still air) *3	P_T	200	mW	
Storage temperature	Tstg	–65 to 150	°C	

Notes: The absolute maximum ratings are values, which must not individually be exceeded, and furthermore, no two of which may be realized at the same time.

1. The input and output voltage ratings may be exceeded if the input and output clamp-current ratings are observed.
2. This value is limited to 4.6 V maximum.
3. The maximum package power dissipation was calculated using a junction temperature of 150°C.

Recommended Operating Conditions

Item	Symbol	Min	Max	Unit	Conditions
Supply voltage range	V_{CC}	1.2	3.6	V	
Input voltage range	V_I	0	3.6	V	
Output voltage range	V_O	0	V_{CC}	V	
Output current	I_{OH}	—	–2	mA	V_{CC} = 1.2 V
		—	–4		V_{CC} = 1.4 V
		—	–6		V_{CC} = 1.65 V
		—	–18		V_{CC} = 2.3 V
		—	–24		V_{CC} = 3.0 V
	I_{OL}	—	2		V_{CC} = 1.2 V
		—	4		V_{CC} = 1.4 V
		—	6		V_{CC} = 1.65 V
		—	18		V_{CC} = 2.3 V
		—	24		V_{CC} = 3.0 V
Input transition rise or fall rate	$\Delta t / \Delta v$	0	20	ns / V	V_{CC} = 1.2 to 2.7 V
		0	10		V_{CC} = 3.3±0.3 V
Operating free-air temperature	Ta	–40	85	°C	

Note: Unused or floating inputs must be held high or low.

Electrical Characteristics

(Ta = –40 to 85°C)

Item	Symbol	V_{CC} (V) *	Min	Typ	Max	Unit	Test conditions
Input voltage	V_{IH}	1.2	V_{CC}×0.75	—	—	V	
		1.4 to 1.6	V_{CC}×0.7	—	—		
		1.65 to 1.95	V_{CC}×0.7	—	—		
		2.3 to 2.7	1.7	—	—		
		3.0 to 3.6	2.0	—	—		
	V_{IL}	1.2	—	—	V_{CC}×0.25		
		1.4 to 1.6	—	—	V_{CC}×0.3		
		1.65 to 1.95	—	—	V_{CC}×0.3		
		2.3 to 2.7	—	—	0.7		
		3.0 to 3.6	—	—	0.8		
Output voltage	V_{OH}	Min to Max	V_{CC}–0.2	—	—	V	I_{OH} = –100 µA
		1.2	0.9	—	—		I_{OH} = –2 mA
		1.4	1.1	—	—		I_{OH} = –4 mA
		1.65	1.2	—	—		I_{OH} = –6 mA
		2.3	1.7	—	—		I_{OH} = –18 mA
		3.0	2.2	—	—		I_{OH} = –24 mA
	V_{OL}	Min to Max	—	—	0.2		I_{OL} = 100 µA
		1.2	—	—	0.3		I_{OL} = 2 mA
		1.4	—	—	0.3		I_{OL} = 4 mA
		1.65	—	—	0.3		I_{OL} = 6 mA
		2.3	—	—	0.55		I_{OL} = 18 mA
		3.0	—	—	0.55		I_{OL} = 24 mA
Input current	I_{IN}	3.6	—	—	±5	µA	V_{IN} = 3.6 V or GND
Off state output current	I_{OZ}	3.6	—	—	±5	µA	V_O = V_{CC} or GND
Quiescent supply current	I_{CC}	3.6	—	—	10	µA	V_{IN} = V_{CC} or GND, I_O = 0
Output leakage current	I_{OFF}	0	—	—	5	µA	V_{IN} or V_O = 0 to 3.6 V
Input capacitance	C_{IN}	3.3	—	4.5	—	pF	V_{IN} = V_{CC} or GND
Output capacitance	C_O	3.3	—	6.5	—	pF	V_O = V_{CC} or GND

Note: For conditions shown as Min or Max, use the appropriate values under recommended operating conditions.

Switching Characteristics

(Ta = –40 to 85°C)

V_{CC} = 1.2 V

Item	Symbol	Min	Typ	Max	Unit	Test conditions	FROM (Input)	TO (Output)
Propagation delay time	t_{PLH} t_{PHL}	—	7.0	—	ns	C_L = 15 pF	A or B	B or A
Enable time	t_{ZH} t_{ZL}	—	8.5	—	ns	C_L = 15 pF	$\overline{OE}$	A or B
Disable time	t_{HZ} t_{LZ}	—	7.0	—	ns	C_L = 15 pF	$\overline{OE}$	A or B

V_{CC} = 1.5±0.1 V

Item	Symbol	Min	Typ	Max	Unit	Test conditions	FROM (Input)	TO (Output)
Propagation delay time	t_{PLH} t_{PHL}	2.0	—	8.0	ns	C_L = 15 pF	A or B	B or A
Enable time	t_{ZH} t_{ZL}	2.0	—	11.0	ns	C_L = 15 pF	$\overline{OE}$	A or B
Disable time	t_{HZ} t_{LZ}	2.0	—	10.0	ns	C_L = 15 pF	$\overline{OE}$	A or B

V_{CC} = 1.8±0.15 V

Item	Symbol	Min	Typ	Max	Unit	Test conditions	FROM (Input)	TO (Output)
Propagation delay time	t_{PLH} t_{PHL}	1.5	—	6.0	ns	C_L = 30 pF	A or B	B or A
Enable time	t_{ZH} t_{ZL}	1.5	—	8.0	ns	C_L = 30 pF	$\overline{OE}$	A or B
Disable time	t_{HZ} t_{LZ}	1.5	—	7.5	ns	C_L = 30 pF	$\overline{OE}$	A or B

Switching Characteristics (cont)

V_{CC} = 2.5±0.2 V

Item	Symbol	Min	Typ	Max	Unit	Test conditions	FROM (Input)	TO (Output)
Propagation delay time	t_{PLH} t_{PHL}	1.0	—	4.0	ns	C_L = 30 pF	A or B	B or A
Enable time	t_{ZH} t_{ZL}	1.0	—	5.0	ns	C_L = 30 pF	$\overline{OE}$	A or B
Disable time	t_{HZ} t_{LZ}	1.0	—	4.5	ns	C_L = 30 pF	$\overline{OE}$	A or B

V_{CC} = 3.3±0.3 V

Item	Symbol	Min	Typ	Max	Unit	Test conditions	FROM (Input)	TO (Output)
Propagation delay time	t_{PLH} t_{PHL}	1.0	—	3.0	ns	C_L = 30 pF	A or B	B or A
Enable time	t_{ZH} t_{ZL}	1.0	—	4.0	ns	C_L = 30 pF	$\overline{OE}$	A or B
Disable time	t_{HZ} t_{LZ}	1.0	—	4.0	ns	C_L = 30 pF	$\overline{OE}$	A or B

Operating Characteristics

(Ta = 25°C)

Item	Symbol	V_{CC} (V)	Min	Typ	Max	Unit	Test conditions
Power dissipation capacitance	C_{PD}	1.5	—	13.0	—	pF	f = 10 MHz
		1.8	—	13.0	—		
		2.5	—	14.0	—		
		3.3	—	17.0	—		

Test Circuit

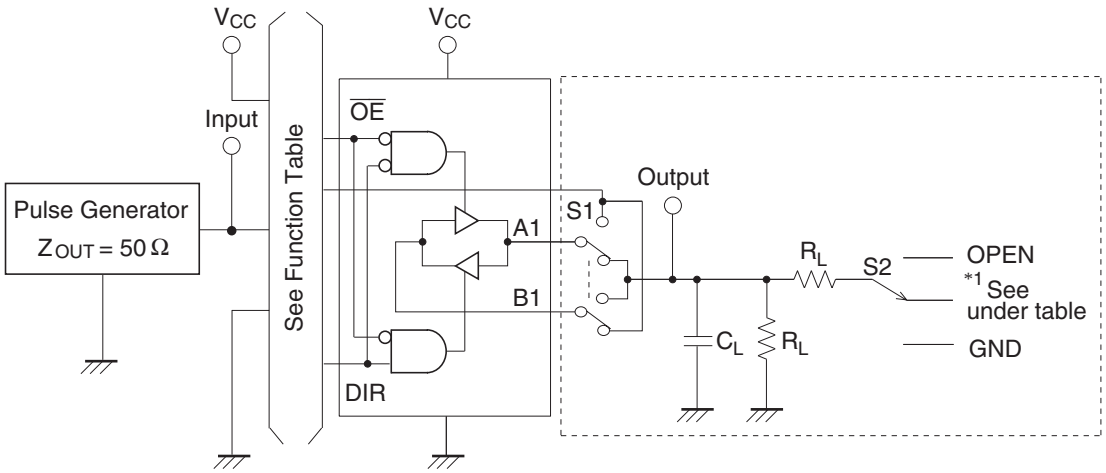

Symbol	S2	
	V_{CC} = 1.2 V, 1.5±0.1 V, 1.8±0.15 V, 2.5±0.2 V	V_{CC} = 3.3±0.3 V
t_{PLH} / t_{PHL}	OPEN	OPEN
t_{HZ} / t_{ZH}	GND	GND
t_{LZ} / t_{ZL}	V_{CC}×2	6.0

Symbol	V_{CC} = 1.2 V, 1.5±0.1 V	V_{CC} = 1.8±0.15 V	V_{CC} = 2.5±0.2 V, 3.3±0.3 V
R_L	2.0 kΩ	1.0 kΩ	500 Ω
C_L	15 pF	30 pF	30 pF

Notes: 1. C_L includes probe and jig capacitance.
2. A2–B2 are idential to above load circuit.
3. S1 : Input–Output change switch.

• **Waveforms – 1**

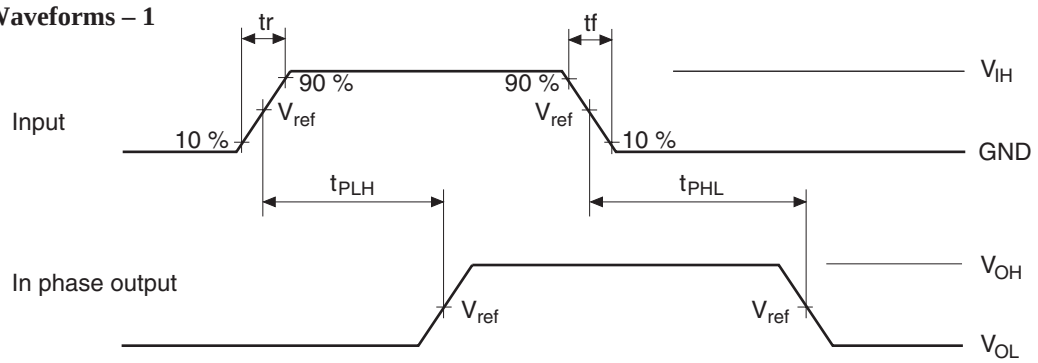

• **Waveforms – 2**

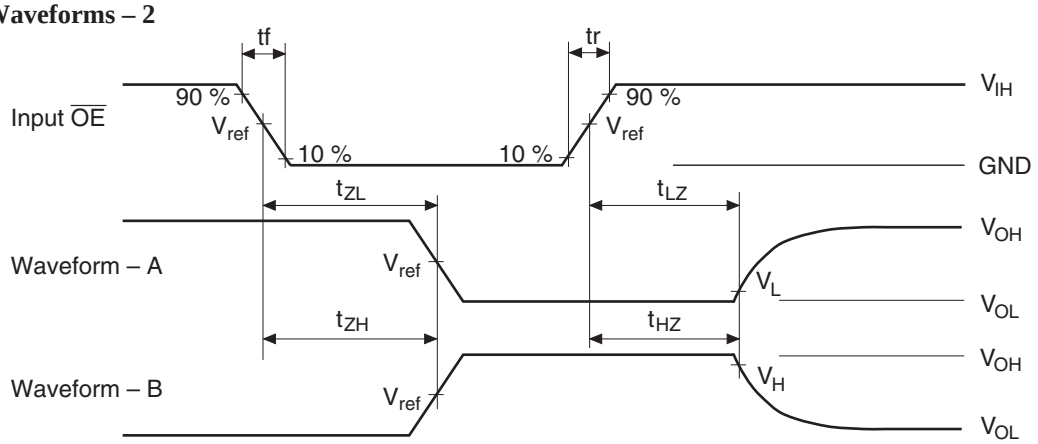

Symbol	V_{CC} = 1.2 V, 1.5±0.1 V	V_{CC} = 1.8±0.15 V	V_{CC} = 2.5±0.2 V	V_{CC} = 3.3±0.3 V
t_r / t_f	2.0 ns	2.0 ns	2.5 ns	2.5 ns
V_{IH}	V_{CC}	V_{CC}	V_{CC}	2.7 V
V_{ref}	50%	50%	50%	1.5 V
V_H / V_L	$V_H = V_{OH}$-0.1 V $V_L = V_{OL}$+0.1 V	$V_H = V_{OH}$-0.15 V $V_L = V_{OL}$+0.15 V	$V_H = V_{OH}$-0.15 V $V_L = V_{OL}$+0.15 V	$V_H = V_{OH}$-0.3 V $V_L = V_{OL}$+0.3 V

Notes: 1. Input waveform : PRR ≤ 10 MHz, Zo = 50 Ω, duty cycle 50%.
2. Waveform – A is for an output with internal conditions such that the output is low except when disabled by the output control.
3. Waveform – B is for an output with internal conditions such that the output is high except when disabled by the output control.
4. The output are measured one at a time with one transition per measurement.

Package Dimensions

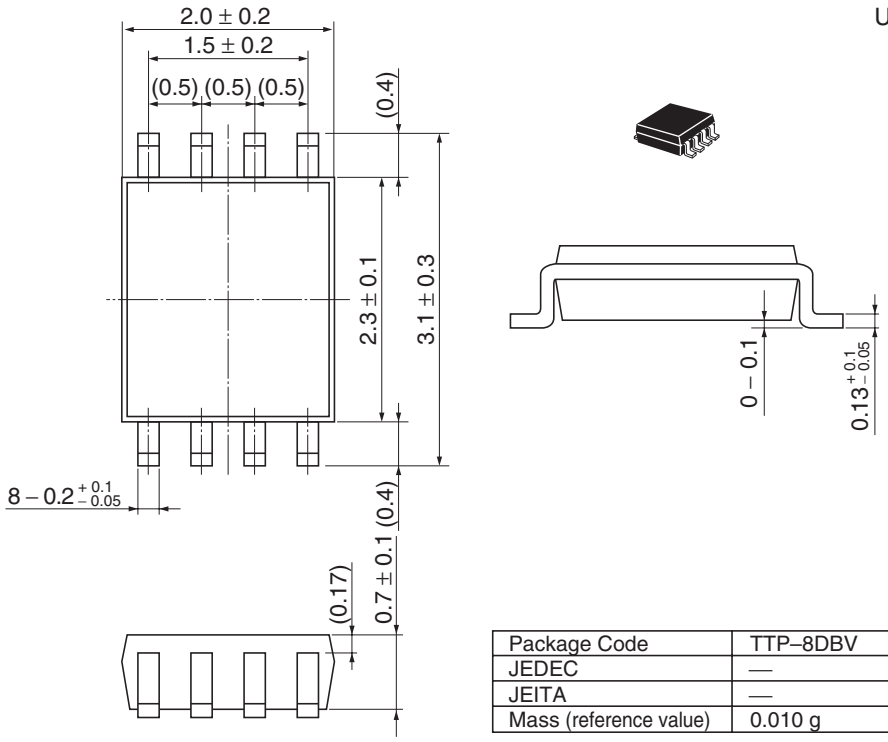

Package Code	TTP–8DBV
JEDEC	—
JEITA	—
Mass (reference value)	0.010 g

Renesas Technology Corp. Sales Strategic Planning Div. Nippon Bldg., 2-6-2, Ohte-machi, Chiyoda-ku, Tokyo 100-0004, Japan

RENESAS SALES OFFICES

http://www.renesas.com

Renesas Technology America, Inc.
450 Holger Way, San Jose, CA 95134-1368, U.S.A
Tel: <1> (408) 382-7500 Fax: <1> (408) 382-7501

Renesas Technology Europe Limited.
Dukes Meadow, Millboard Road, Bourne End, Buckinghamshire, SL8 5FH, United Kingdom
Tel: <44> (1628) 585 100, Fax: <44> (1628) 585 900

Renesas Technology Europe GmbH
Dornacher Str. 3, D-85622 Feldkirchen, Germany
Tel: <49> (89) 380 70 0, Fax: <49> (89) 929 30 11

Renesas Technology Hong Kong Ltd.
7/F., North Tower, World Finance Centre, Harbour City, Canton Road, Hong Kong
Tel: <852> 2265-6688, Fax: <852> 2375-6836

Renesas Technology Taiwan Co., Ltd.
FL 10, #99, Fu-Hsing N. Rd., Taipei, Taiwan
Tel: <886> (2) 2715-2888, Fax: <886> (2) 2713-2999

Renesas Technology (Shanghai) Co., Ltd.
26/F., Ruijin Building, No.205 Maoming Road (S), Shanghai 200020, China
Tel: <86> (21) 6472-1001, Fax: <86> (21) 6415-2952

Renesas Technology Singapore Pte. Ltd.
1, Harbour Front Avenue, #06-10, Keppel Bay Tower, Singapore 098632
Tel: <65> 6213-0200, Fax: <65> 6278-8001

Colophon 1.0