12-Bit CCD Signal Processor with *Precision Timing* Core

AD9949

FEATURES

New AD9949A supports CCD line length > 4096 pixels
Correlated double sampler (CDS)
0 dB to 18 dB pixel gain amplifier (PxGA®)
6 dB to 42 dB 10-bit variable gain amplifier (VGA)
12-bit, 36 MSPS analog-to-digital converter (ADC)
Black level clamp with variable level control
Complete on-chip timing driver
***Precision Timing*™ core with < 600 ps resolution**
On-chip 3 V horizontal and RG drivers
40-lead LFCSP package

APPLICATIONS

Digital still cameras
High speed digital imaging applications

GENERAL DESCRIPTION

The AD9949 is a highly integrated CCD signal processor for digital still camera applications. Specified at pixel rates of up to 36 MHz, the AD9949 consists of a complete analog front end with A/D conversion, combined with a programmable timing driver. The *Precision Timing* core allows adjustment of high speed clocks with < 600 ps resolution.

The analog front end includes black level clamping, CDS, PxGA, VGA, and a 36 MSPS, 12-bit ADC. The timing driver provides the high speed CCD clock drivers for RG and H1 to H4. Operation is programmed using a 3-wire serial interface.

Packaged in a space-saving, 40-lead LFCSP package, the AD9949 is specified over an operating temperature range of −20°C to +85°C.

FUNCTIONAL BLOCK DIAGRAM

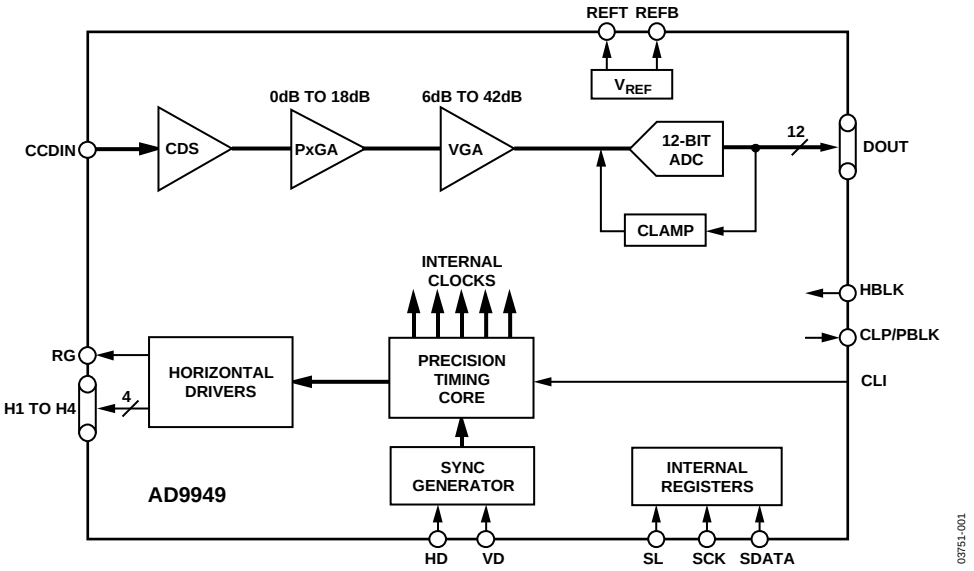

Figure 1.

Rev. B

Information furnished by Analog Devices is believed to be accurate and reliable. However, no responsibility is assumed by Analog Devices for its use, nor for any infringements of patents or other rights of third parties that may result from its use. Specifications subject to change without notice. No license is granted by implication or otherwise under any patent or patent rights of Analog Devices. Trademarks and registered trademarks are the property of their respective owners.

One Technology Way, P.O. Box 9106, Norwood, MA 02062-9106, U.S.A.
Tel: 781.329.4700 **www.analog.com**
Fax: 781.326.8703
© 2004 Analog Devices, Inc. All rights reserved.

TABLE OF CONTENTS

Specifications ... 3
- General Specifications ... 3
- Digital Specifications ... 3
- Analog Specifications ... 4
- Timing Specifications ... 5

Absolute Maximum Ratings ... 6
- Thermal Characteristics ... 6
- ESD Caution ... 6

Pin Configuration and Function Descriptions ... 7

Terminology ... 8

Equivalent Input/Output Circuits ... 9

Typical Performance Characteristics ... 10

System Overview ... 11
- H-Counter Behavior ... 11

Serial Interface Timing ... 12

Complete Register Listing ... 13

Precision Timing High Speed Timing Generation ... 18
- Timing Resolution ... 18
- High Speed Clock Programmability ... 18
- H-Driver and RG Outputs ... 19
- Digital Data Outputs ... 19

Horizontal Clamping and Blanking ... 21
- Individual CLPOB and PBLK Sequences ... 21
- Individual HBLK Sequences ... 21

Generating Special HBLK Patterns ... 23
- Horizontal Sequence Control ... 23
- External HBLK Signal ... 23
- H-Counter Synchronization ... 24

Power-Up Procedure ... 25
- Recommended Power-Up Sequence ... 25

Analog Front End Description and Operation ... 26
- DC Restore ... 26
- Correlated Double Sampler ... 26
- PxGA ... 26
- Variable Gain Amplifier ... 29
- ADC ... 29
- Optical Black Clamp ... 29
- Digital Data Outputs ... 29

Applications Information ... 30
- Circuit Configuration ... 30
- Grounding and Decoupling Recommendations ... 30
- Driving the CLI Input ... 31
- Horizontal Timing Sequence Example ... 31

Outline Dimensions ... 34
- Ordering Guide ... 34

REVISION HISTORY

11/04—Data Sheet Changed from Rev. A to Rev. B

Changes to Ordering Guide ... 35

9/04—Data Sheet Changed from Rev. 0 to Rev. A

Changes to Features ... 1
Changes to Analog Specifications ... 4
Changes to Terminology Section ... 9
Added H-Counter Behavior Section ... 12
Changes to Table 7 ... 14
Changes to Table 12 ... 17
Changes to Table 15 ... 17
Changes to H-Counter Sync Section ... 24
Changes to Recommended Power-Up Sequence Section ... 25
Changes to Ordering Guide ... 35

5/03—Revision 0: Initial Version

SPECIFICATIONS

GENERAL SPECIFICATIONS

Table 1.

Parameter	Min	Typ	Max	Unit
TEMPERATURE RANGE				
Operating	−20		+85	°C
Storage	−65		+150	°C
MAXIMUM CLOCK RATE	36			MHz
POWER SUPPLY VOLTAGE				
AVDD, TCVDD (AFE, Timing Core)	2.7	3.0	3.6	V
HVDD (H1 to H4 Drivers)	2.7	3.0	3.6	V
RGVDD (RG Driver)	2.7	3.0	3.6	V
DRVDD (D0 to D11 Drivers)	2.7	3.0	3.6	V
DVDD (All Other Digital)	2.7	3.0	3.6	V
POWER DISSIPATION				
36 MHz, HVDD = RGVDD = 3 V, 100 pF H1 to H4 Loading[1]		320		mW
Total Shutdown Mode		1		mW

[1] The total power dissipated by the HVDD supply may be approximated using the equation
Total HVDD Power = (CLOAD x HVDD x Pixel Frequency) x HVDD x (Number of H – Outputs Used)
Reducing the H-loading, using only two of the outputs, and/or using a lower HVDD supply, reduces the power dissipation.

DIGITAL SPECIFICATIONS

T_{MIN} to T_{MAX}, AVDD = DVDD = DRVDD = HVDD = RGVDD = 2.7 V, C_L = 20 pF, unless otherwise noted.

Table 2.

Parameter	Symbol	Min	Typ	Max	Unit
LOGIC INPUTS					
High Level Input Voltage	V_{IH}	2.1			V
Low Level Input Voltage	V_{IL}			0.6	V
High Level Input Current	I_{IH}		10		µA
Low Level Input Current	I_{IL}		10		µA
Input Capacitance	C_{IN}		10		pF
LOGIC OUTPUTS					
High Level Output Voltage, I_{OH} = 2 mA	V_{OH}	2.2			V
Low Level Output Voltage, I_{OL} = 2 mA	V_{OL}			0.5	V
CLI INPUT					
High Level Input Voltage					
(TCVDD/2 + 0.5 V)	V_{IH-CLI}	1.85			V
Low Level Input Voltage	V_{IL-CLI}			0.85	V
RG AND H-DRIVER OUTPUTS					
High Level Output Voltage					
(RGVDD – 0.5 V and HVDD – 0.5 V)	V_{OH}	2.2			V
Low Level Output Voltage	V_{OL}			0.5	V
Maximum Output Current (Programmable)			30		mA
Maximum Load Capacitance		100			pF

ANALOG SPECIFICATIONS

T_{MIN} to T_{MAX}, AVDD = DVDD = 3.0 V, f_{CLI} = 36 MHz, typical timing specifications, unless otherwise noted.

Table 3.

Parameter	Min	Typ	Max	Unit	Notes
CDS					
Gain		0		dB	
Allowable CCD Reset Transient[1]		500		mV	
Maximum Input Range before Saturation[1]	1.0			V p-p	
Maximum CCD Black Pixel Amplitude[1]		±50		mV	
PIXEL GAIN AMPLIFIER (P×GA)					
Gain Control Resolution		256		Steps	
Gain Monotonicity					
Minimum Gain		0		dB	
Maximum Gain		18		dB	
VARIABLE GAIN AMPLIFIER (VGA)					
Maximum Input Range	1.0			V p-p	
Maximum Output Range	2.0			V p-p	
Gain Control Resolution		1024		Steps	
Gain Monotonicity		Guaranteed			
Gain Range					
Minimum Gain (VGA Code 0)		6		dB	
Maximum Gain (VGA Code 1023)		42		dB	
BLACK LEVEL CLAMP					
Clamp Level Resolution		256		Steps	
Clamp Level					Measured at ADC output
Minimum Clamp Level (0)		0		LSB	
Maximum Clamp Level (255)		255		LSB	
A/D CONVERTER					
Resolution	12			Bits	
Differential Nonlinearity (DNL)	−1.0	±0.5	+1.0	LSB	
No Missing Codes		Guaranteed			
Integral Nonlinearity (INL)			8	LSB	
Full-Scale Input Voltage		2.0		V	
VOLTAGE REFERENCE					
Reference Top Voltage (REFT)		2.0		V	
Reference Bottom Voltage (REFB)		1.0		V	
SYSTEM PERFORMANCE					Specifications include entire signal chain
VGA Gain Accuracy					
Minimum Gain (Code 0)	5.0	5.5	6.0	dB	
Maximum Gain (Code 1023)	40.5	41.5	42.5	dB	
Peak Nonlinearity, 500 mV Input Signal		0.15	0.6	%	12 dB gain applied
Total Output Noise		0.8		LSB rms	AC grounded input, 6 dB gain applied
Power Supply Rejection (PSR)		50		dB	Measured with step change on supply

[1] Input signal characteristics defined as follows:

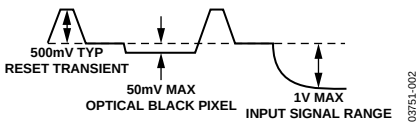

TIMING SPECIFICATIONS

C_L = 20 pF, f_{CLI} = 36 MHz, unless otherwise noted.

Table 4.

Parameter	Symbol	Min	Typ	Max	Unit
MASTER CLOCK (CLI) (See Figure 16)					
CLI Clock Period	t_{CLI}	27.8			ns
CLI High/Low Pulse Width	t_{ADC}	11.2	13.9	16.6	ns
Delay from CLI to Internal Pixel Period Position	t_{CLIDLY}		6		ns
CLPOB PULSE WIDTH (PROGRAMMABLE)[1]	t_{COB}	2	20		Pixels
SAMPLE CLOCKS (See Figure 18)					
SHP Rising Edge to SHD Rising Edge	t_{S1}	12.5	13.9		ns
DATA OUTPUTS (See Figure 19 and Figure 20)					
Output Delay From Programmed Edge	t_{OD}		6		ns
Pipeline Delay			11		Cycles
SERIAL INTERFACE (SERIAL TIMING SHOWN IN Figure 14 and Figure 15)					
Maximum SCK Frequency	f_{SCLK}	10			MHz
SL to SCK Setup Time	t_{LS}	10			ns
SCK to SL Hold Time	t_{LH}	10			ns
SDATA Valid to SCK Rising Edge Setup	t_{DS}	10			ns
SCK Falling Edge to SDATA Valid Hold	t_{DH}	10			ns
SCK Falling Edge to SDATA Valid Read	t_{DV}	10			ns

[1] Minimum CLPOB pulse width is for functional operation only. Wider typical pulses are recommended to achieve low noise clamp reference.

ABSOLUTE MAXIMUM RATINGS

Table 5.

Parameter	With Respect to	Rating
AVDD and TCVDD	AVSS	−0.3 V to +3.9 V
HVDD and RGVDD	HVSS, RGVSS	−0.3 V to +3.9 V
DVDD and DRVDD	DVSS, DRVSS	−0.3 V to +3.9 V
Any VSS	Any VSS	−0.3 V to +0.3 V
Digital Outputs	DRVSS	−0.3 V to DRVDD + 0.3 V
CLPOB/PBLK and HBLK	DVSS	−0.3 V to DVDD + 0.3 V
SCK, SL, and SDATA	DVSS	−0.3 V to DVDD + 0.3 V
RG	RGVSS	−0.3 V to RGVDD + 0.3 V
H1 to H4	HVSS	−0.3 V to HVDD + 0.3 V
REFT, REFB, and CCDIN	AVSS	−0.3 V to AVDD + 0.3 V
Junction Temperature		150°C
Lead Temperature (10 s)		300°C

Stresses above those listed under Absolute Maximum Ratings may cause permanent damage to the device. This is a stress rating only; functional operation of the device at these or any other conditions above those listed in the operational sections of this specification is not implied. Exposure to absolute maximum rating conditions for extended periods may affect device reliability.

THERMAL CHARACTERISTICS

Thermal Resistance

40-Lead LFCSP Package: θ_{JA} = 27°C/W[1].

[1] θ_{JA} is measured using a 4-layer PCB with the exposed paddle soldered to the board.

ESD CAUTION

ESD (electrostatic discharge) sensitive device. Electrostatic charges as high as 4000 V readily accumulate on the human body and test equipment and can discharge without detection. Although this product features proprietary ESD protection circuitry, permanent damage may occur on devices subjected to high energy electrostatic discharges. Therefore, proper ESD precautions are recommended to avoid performance degradation or loss of functionality.

PIN CONFIGURATION AND FUNCTION DESCRIPTIONS

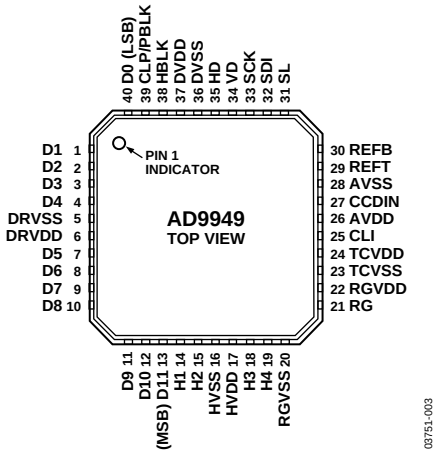

Figure 2. Pin Configuration

Table 6. Pin Function Descriptions

Pin No.	Mnemonic	Type[1]	Description
1 to 4	D1 to D4	DO	Data Outputs
5	DRVSS	P	Digital Driver Ground
6	DRVDD	P	Digital Driver Supply
7 to 13	D5 to D11	DO	Data Outputs (D11 is MSB)
14	H1	DO	CCD Horizontal Clock 1
15	H2	DO	CCD Horizontal Clock 2
16	HVSS	P	H1 to H4 Driver Ground
17	HVDD	P	H1 to H4 Driver Supply
18	H3	DO	CCD Horizontal Clock 3
19	H4	DO	CCD Horizontal Clock 4
20	RGVSS	P	RG Driver Ground
21	RG	DO	CCD Reset Gate Clock
22	RGVDD	P	RG Driver Supply
23	TCVSS	P	Analog Ground for Timing Core
24	TCVDD	P	Analog Supply for Timing Core
25	CLI	DI	Master Clock Input
26	AVDD	P	Analog Supply for AFE
27	CCDIN	AI	Analog Input for CCD Signal (Connect through Series 0.1 µF Capacitor)
28	AVSS	P	Analog Ground for AFE
29	REFT	AO	Reference Top Decoupling (Decouple with 1.0 µF to AVSS)
30	REFB	AO	Reference Bottom Decoupling (Decouple with 1.0 µF to AVSS)
31	SL	DI	3-Wire Serial Load
32	SDI	DI	3-Wire Serial Data Input
33	SCK	DI	3-Wire Serial Clock
34	VD	DI	Vertical Sync Pulse
35	HD	DI	Horizontal Sync Pulse
36	DVSS	P	Digital Ground
37	DVDD	P	Digital Supply
38	HBLK	DI	Optional HBLK Input
39	CLP/PBLK	DO	CLPOB or PBLK Output
40	D0	DO	Data Output LSB

[1] Type: AI = Analog Input, AO = Analog Output, DI = Digital Input, DO = Digital Output, P = Power.

TERMINOLOGY

Differential Nonlinearity (DNL)
An ideal ADC exhibits code transitions that are exactly 1 LSB apart. DNL is the deviation from this ideal value. Thus, every code must have a finite width. No missing codes guaranteed to 12-bit resolution indicates that all 4096 codes, respectively, must be present over all operating conditions.

Integral Nonlinearity (INL)
INL is the deviation of each individual code measured from a true straight line from zero to full scale. The point used as zero scale occurs 0.5 LSB before the first code transition. Positive full scale is defined as a level 1 LSB and 0.5 LSB beyond the last code transition. The deviation is measured from the middle of each particular output code to the true straight line.

Peak Nonlinearity
Peak nonlinearity, a full signal chain specification, refers to the peak deviation of the output of the AD9949 from a straight line. The point used as zero scale occurs 0.5 LSB before the first code transition. Positive full scale is defined as a level 1 LSB and 0.5 LSB beyond the last code transition. The deviation is measured from the middle of each particular output code to the straight line reference. The error is then expressed as a percentage of the 2 V ADC full-scale signal. The input signal is appropriately gained up to fill the ADC's full-scale range.

Total Output Noise
The rms output noise is measured using histogram techniques. The standard deviation of the ADC output codes is calculated in LSB and represents the rms noise level of the total signal chain at the specified gain setting. The output noise can be converted to an equivalent voltage, using the relationship

$$1\ \text{LSB} = (\textit{ADC full scale}/2^n\ \textit{codes})$$

where n is the bit resolution of the ADC. For the AD9949, 1 LSB is approximately 0.488 mV.

Power Supply Rejection (PSR)
The PSR is measured with a step change applied to the supply pins. The PSR specification is calculated from the change in the data outputs for a given step change in the supply voltage.

EQUIVALENT INPUT/OUTPUT CIRCUITS

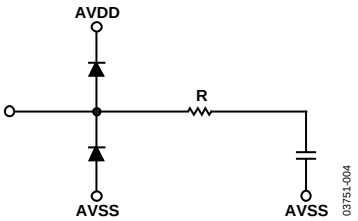

Figure 3. CCDIN (Pin 27)

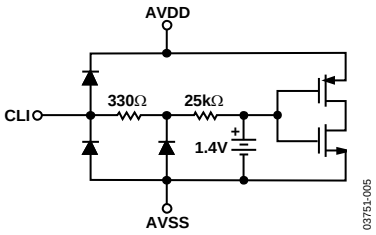

Figure 4. CLI (Pin 25)

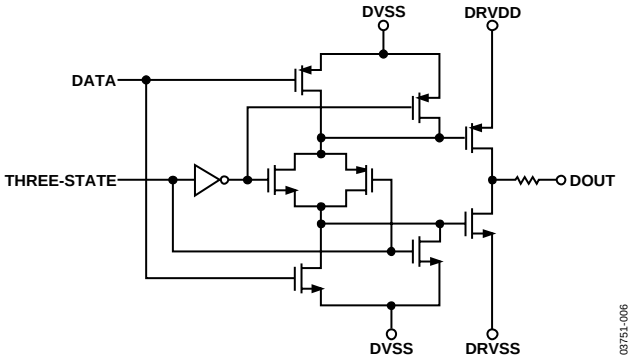

Figure 5. Data Outputs D0 to D11 (Pins 1 to 4, 7 to 13, 40)

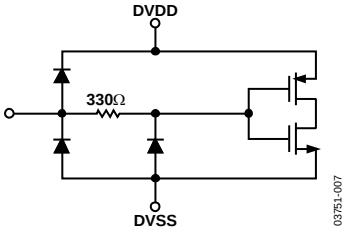

Figure 6. Digital Inputs (Pins 31 to 35, 38)

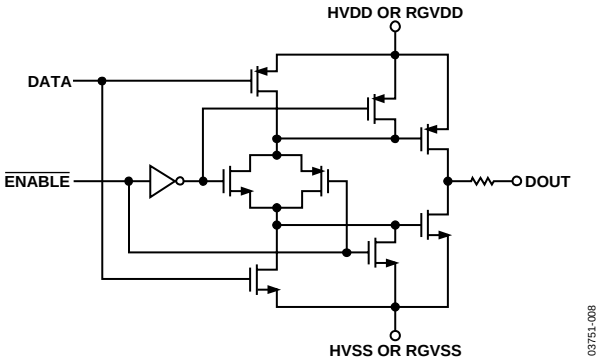

Figure 7. H1 to H4 and RG (Pins 14 to 15, 18 to 19, 21)

TYPICAL PERFORMANCE CHARACTERISTICS

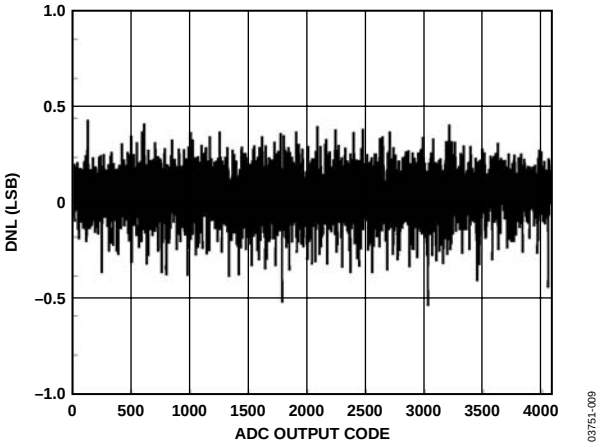

Figure 8. Typical DNL

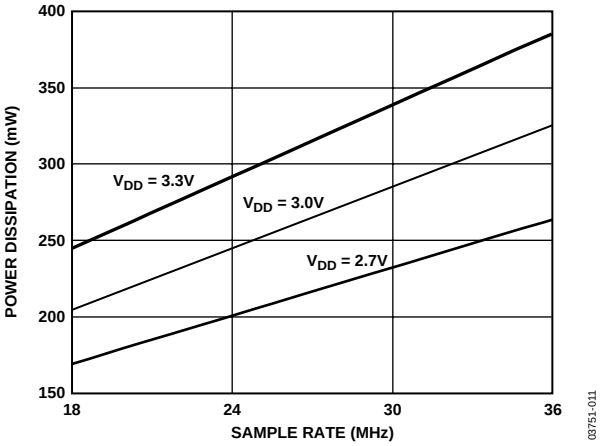

Figure 10. Power Curves

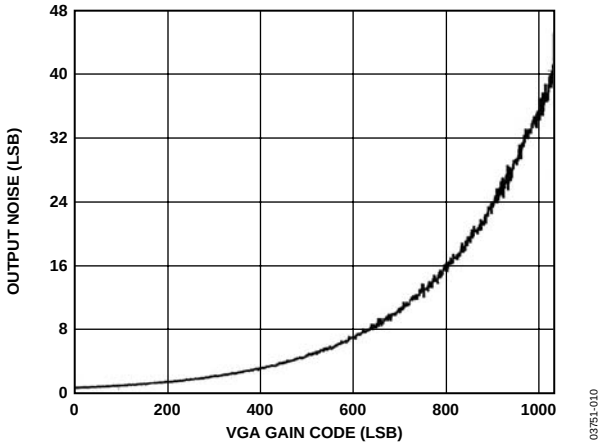

Figure 9. Output Noise vs. VGA Gain

SYSTEM OVERVIEW

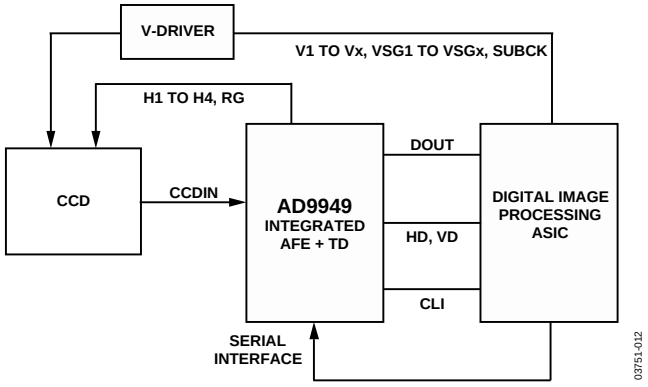

Figure 11. Typical Application

Figure 11 shows the typical system application diagram for the AD9949. The CCD output is processed by the AD9949's AFE circuitry, which consists of a CDS, a PxGA, a VGA, a black level clamp, and an ADC. The digitized pixel information is sent to the digital image processor chip where all postprocessing and compression occurs. To operate the CCD, CCD timing parameters are programmed into the AD9949 from the image processor through the 3-wire serial interface. From the system master clock, CLI, provided by the image processor, the AD9949 generates the high speed CCD clocks and all internal AFE clocks. All AD9949 clocks are synchronized with VD and HD. The AD9949's horizontal pulses (CLPOB, PBLK, and HBLK) are programmed and generated internally.

The H-drivers for H1 to H4 and RG are included in the AD9949, allowing these clocks to be directly connected to the CCD. The H-drive voltage of 3 V is supported in the AD9949.

Figure 12 shows the horizontal and vertical counter dimensions for the AD9949. All internal horizontal clocking is programmed using these dimensions to specify line and pixel locations.

H-COUNTER BEHAVIOR

When the maximum horizontal count of 4096 pixels is exceeded, the H-counter in the AD9949 rolls over to zero and continues counting. It is, therefore, recommended that the maximum counter value not be exceeded.

However, the newer AD9949A version behaves differently. In the AD9949A, the internal H-counter holds at its maximum count of 4095 instead of rolling over. This feature allows the AD9949A to be used in applications containing a line length greater than 4096 pixels. Although no programmable values for the horizontal blanking or clamping are available beyond pixel 4095, the H, RG, and AFE clocking continues to operate, sampling the remaining pixels on the line.

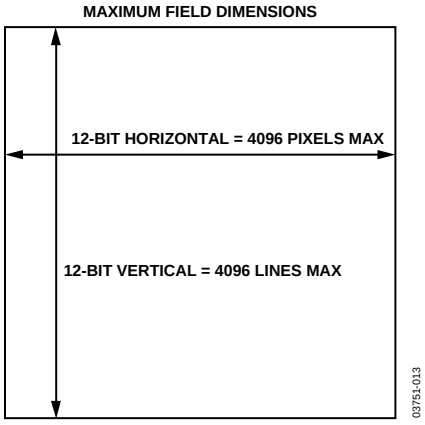

Figure 12. Vertical and Horizontal Counters

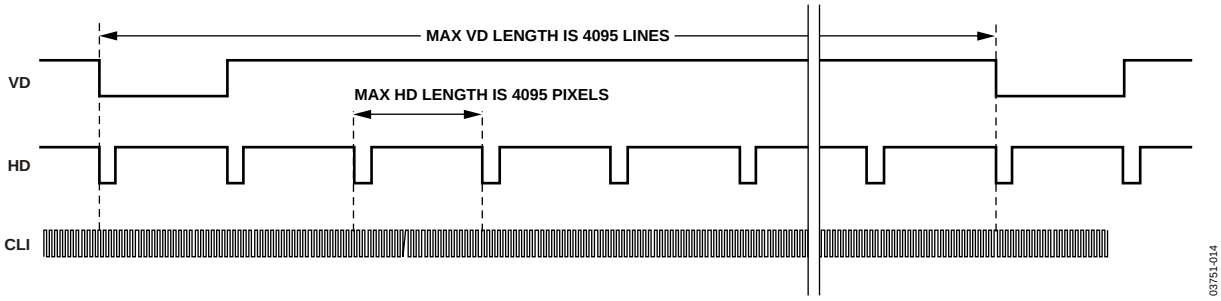

Figure 13. Maximum VD/HD Dimensions

SERIAL INTERFACE TIMING

The AD9949's internal registers are accessed through a 3-wire serial interface. Each register consists of an 8-bit address and a 24-bit data-word. Both the 8-bit address and 24-bit data-word are written starting with the LSB. To write to each register, a 32-bit operation is required, as shown in Figure 14. Although many registers are less than 24 bits wide, all 24 bits must be written for each register. If the register is only 16 bits wide, then the upper eight bits may be filled with zeros during the serial write operation. If fewer than 24 bits are written, the register will not be updated with new data.

Figure 15 shows a more efficient way to write to the registers by using the AD9949's address auto-increment capability. Using this method, the lowest desired address is written first, followed by multiple 24-bit data-words. Each new 24-bit data-word is written automatically to the next highest register address. By eliminating the need to write each 8-bit address, faster register loading is achieved. Address auto-increment may be used starting with any register location and may be used to write to as few as two registers or as many as the entire register space.

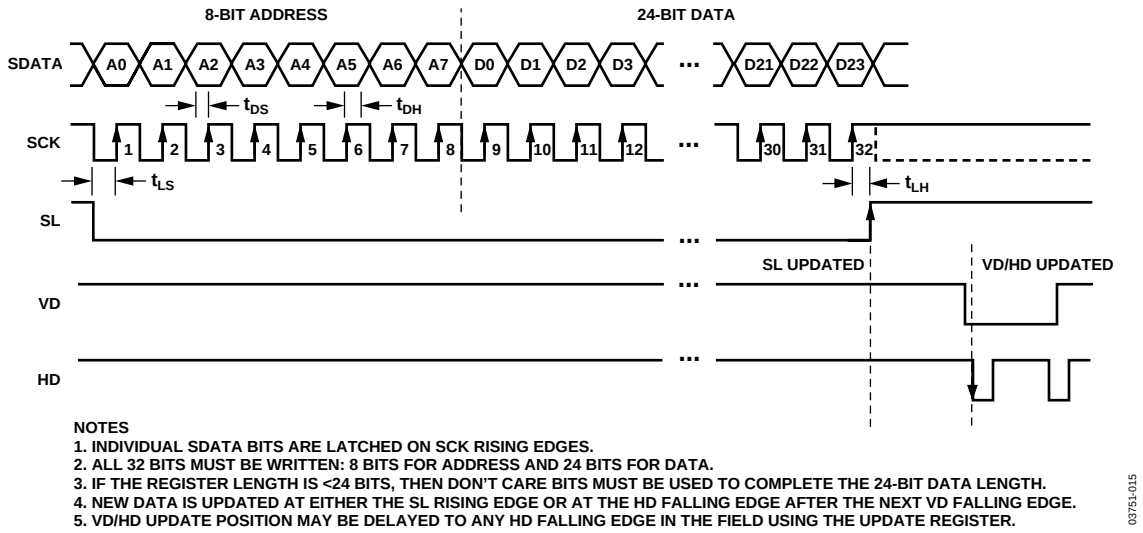

Figure 14. Serial Write Operation

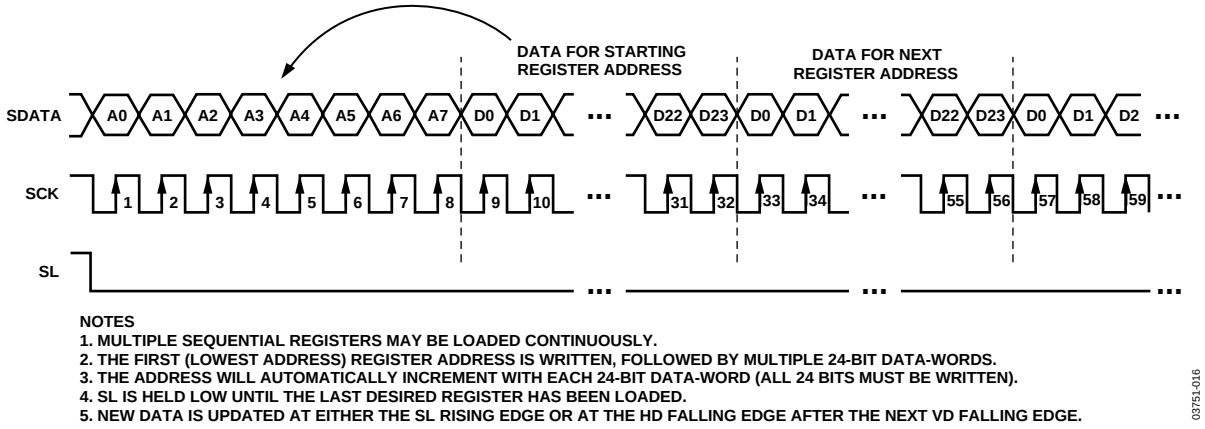

Figure 15. Continuous Serial Write Operation

COMPLETE REGISTER LISTING

1. All addresses and default values are expressed in hexadecimal.
2. All registers are VD/HD updated as shown in Figure 14, except for the registers indicated in Table 7, which are SL updated.

Table 7. SL Updated Registers

Register	Description
OPRMODE	AFE Operation Modes
CTLMODE	AFE Control Modes
SW_RESET	Software Reset Bit
TGCORE _RSTB	Reset Bar Signal for Internal TG Core
PREVENTUPDATE	Prevents Update of Registers
VDHDEDGE	VD/HD Active Edge
FIELDVAL	Resets Internal Field Pulse
HBLKRETIME	Retimes the HBLK to Internal Clock
CLPBLKOUT	CLP/BLK Output Pin Select
CLPBLKEN	Enables CLP/BLK Output Pin
H1CONTROL	H1/H2 Polarity/Edge Control
RGCONTROL	RG Polarity/Edge Control
DRVCONTROL	RG and H1 to H4 Drive Current
SAMPCONTROL	SHP/SHD Sampling Edge Control
DOUTPHASE	Data Output Phase Adjustment

Table 8. AFE Register Map

Address	Data Bit Content	Default Value	Name	Description
00	[11:0]	4	OPRMODE	AFE Operation Modes. (See Table 14.)
01	[9:0]	0	VGAGAIN	VGA Gain.
02	[7:0]	80	CLAMP LEVEL	Optical Black Clamp Level.
03	[11:0]	4	CTLMODE	AFE Control Modes. (See Table 15.)
04	[17:0]	0	PxGA GAIN01	PxGA Gain Registers for Color 0 [8:0] and Color 1 [17:9].
05	[17:0]	0	PxGA GAIN23	PxGA Gain Registers for Color 2 [8:0] and Color 3 [17:9].

Table 9. Miscellaneous Register Map

Address	Data Bit Content	Default Value	Name	Description
10	[0]	0	SW_RST	Software Reset. 1 = Reset all registers to default, then self-clear back to 0.
11	[0]	0	OUT_CONTROL	Output Control. 0 = Make all dc outputs inactive.
12	[0]	0	TGCORE_RSTB	Timing Core Reset Bar. 0 = Reset TG core. 1 = Resume operation.
13	[11:0]	0	UPDATE	Serial Update. Sets the line (HD) within the field to update serial data.
14	[0]	0	PREVENTUPDATE	Prevents the update of the VD updated registers. 1 = Prevent Update.
15	[0]	0	VDHDEDGE	VD/HD Active Edge. 0 = Falling Edge Triggered. 1 = Rising Edge Triggered.
16	[1:0]	0	FIELDVAL	Field Value Sync. 0 = Next Field 0. 1 = Next Field 1. 2/3 = Next Field 2.
17	[0]	0	HBLKRETIME	Retime HBLK to Internal H1 Clock. Preferred setting is 1. Setting to 1 adds one cycle delay to HBLK toggle positions.
18	[1:0]	0	CLPBLKOUT	CLP/BLK Pin Output Select. 0 = CLPOB. 1 = PBLK. 2 = HBLK. 3 = Low.
19	[0]	1	CLPBLKEN	Enable CLP/BLK Output. 1 = Enable.
1A	[0]	0	TEST MODE	Internal Test Mode. Should always be set high.

Table 10. CLPOB Register Map

Address	Data Bit Content	Default Value (Hex)	Name	Description
20	[3:0]	F	CLPOBPOL	Start Polarities for CLPOB Sequences 0, 1, 2, and 3.
21	[23:0]	FFFFFF	CLPOBTOG_0	Sequence 0. Toggle Position 1 [11:0] and Toggle Position 2 [23:12].
22	[23:0]	FFFFFF	CLPOBTOG_1	Sequence 1. Toggle Position 1 [11:0] and Toggle Position 2 [23:12].
23	[23:0]	FFFFFF	CLPOBTOG_2	Sequence 2. Toggle Position 1 [11:0] and Toggle Position 2 [23:12].
24	[23:0]	FFFFFF 0	CLPOBTOG_3 CLPOBSCP0	Sequence 3. Toggle Position 1 [11:0] and Toggle Position 2 [23:12]. CLPOB Sequence-Change Position 0 (Hard-Coded to 0).
25	[7:0]	0	CLPOBSPTR	CLPOB Sequence Pointers for Region 0 [1:0], 1 [3:2], 2[5:4], 3[7:6].
26	[11:0]	FFF	CLPOBSCP1	CLPOB Sequence-Change Position 1.
27	[11:0]	FFF	CLPOBSCP2	CLPOB Sequence-Change Position 2.
28	[11:0]	FFF	CLPOBSCP3	CLPOB Sequence-Change Position 3.

Table 11. PBLK Register Map

Address	Data Bit Con-tent	Default Value (Hex)	Name	Description
30	[3:0]	F	PBLKPOL	Start Polarities for PBLK Sequences 0, 1, 2, and 3.
31	[23:0]	FFFFFF	PBLKTOG_0	Sequence 0. Toggle Position 1 [11:0] and Toggle Position 2 [23:12].
32	[23:0]	FFFFFF	PBLKTOG_1	Sequence 1. Toggle Position 1 [11:0] and Toggle Position 2 [23:12].
33	[23:0]	FFFFFF	PBLKTOG_2	Sequence 2. Toggle Position 1 [11:0] and Toggle Position 2 [23:12].
34	[23:0]	FFFFFF 0	PBLKTOG_3 PBLKSCP0	Sequence 3. Toggle Position 1 [11:0] and Toggle Position 2 [23:12]. PBLK Sequence-Change Position 0 (Hard-Coded to 0).
35	[7:0]	0	PBLKSPTR	PBLK Sequence Pointers for Region 0 [1:0], 1 [3:2], 2 [5:4], 3 [7:6].
36	[11:0]	FFF	PBLKSCP1	PBLK Sequence-Change Position 1.
37	[11:0]	FFF	PBLKSCP2	PBLK Sequence-Change Position 2.
38	[11:0]	FFF	PBLKSCP3	PBLK Sequence-Change Position 3.

Table 12. HBLK Register Map

Address	Data Bit Content	Default Value (Hex)	Name	Description
40	[0]	0	HBLKDIR	HBLK Internal/External. 0 = Internal. 1 = External.
41	[0]	0	HBLKPOL	HBLK External Active Polarity. 0 = Active Low. 1 = Active High.
42	[0]	1	HBLKEXTMASK	HBLK External Masking Polarity. 0 = Mask H1 Low. 1 = Mask H1High.
43	[3:0]	F	HBLKMASK	HBLK Internal Masking Polarity for Each Sequence 0 to 3. 0 = Mask H1 Low. 1 = Mask H1 High.
44	[23:0]	FFFFFF	HBLKTOG12_0	Sequence 0. Toggle Position 1 [11:0] and Toggle Position 2 [23:12].
45	[23:0]	FFFFFF	HBLKTOG34_0	Sequence 0. Toggle Position 3 [11:0] and Toggle Position 4 [23:12].
46	[23:0]	FFFFFF	HBLKTOG56_0	Sequence 0. Toggle Position 5 [11:0] and Toggle Position 6 [23:12].
47	[23:0]	FFFFFF	HBLKTOG12_1	Sequence 1. Toggle Position 1 [11:0] and Toggle Position 2 [23:12].
48	[23:0]	FFFFFF	HBLKTOG34_1	Sequence 1. Toggle Position 3 [11:0] and Toggle Position 4 [23:12].
49	[23:0]	FFFFFF	HBLKTOG56_1	Sequence 1. Toggle Position 5 [11:0] and Toggle Position 6 [23:12].
4A	[23:0]	FFFFFF	HBLKTOG12_2	Sequence 2. Toggle Position 1 [11:0] and Toggle Position 2 [23:12].
4B	[23:0]	FFFFFF	HBLKTOG34_2	Sequence 2. Toggle Position 3 [11:0] and Toggle Position 4 [23:12].
4C	[23:0]	FFFFFF	HBLKTOG56_2	Sequence 2. Toggle Position 5 [11:0] and Toggle Position 6 [23:12].
4D	[23:0]	FFFFFF	HBLKTOG12_3	Sequence 3. Toggle Position 1 [11:0] and Toggle Position 2 [23:12].
4E	[23:0]	FFFFFF	HBLKTOG34_3	Sequence 3. Toggle Position 3 [11:0] and Toggle Position 4 [23:12].
4F	[23:0]	FFFFFF	HBLKTOG56_3	Sequence 3. Toggle Position 5 [11:0] and Toggle Position 6[23:12].
		0	HBLKSCP0	HBLK Sequence-Change Position 0 (Hard-coded to 0).
50	[7:0]	0	HBLKSPTR	HBLK Sequence Pointers for Region 0 [1:0], 1 [3:2], 2 [5:4], 3 [7:6].
51	[11:0]	FFF	HBLKSCP1	HBLK Sequence-Change Position 1.
52	[11:0]	FFF	HBLKSCP2	HBLK Sequence-Change Position 2.
53	[11:0]	FFF	HBLKSCP3	HBLK Sequence-Change Position 3.

Table 13. H1 to H2, RG, SHP, SHD Register Map

Address	Data Bit Content	Default Value	Name	Description
60	[12:0]	01001	H1CONTROL	H1 Signal Control. Polarity [0](0 = Inversion, 1 = No Inversion). H1 Positive Edge Location [6:1]. H1 Negative Edge Location [12:7].
61	[12:0]	00801	RGCONTROL	RG Signal Control. Polarity [0](0 = Inversion, 1 = No Inversion). RG Positive Edge Location [6:1]. RG Negative Edge Location [12:7].
62	[14:0]	0	DRVCONTROL	Drive Strength Control for H1 [2:0], H2 [5:3], H3 [8:6], H4 [11:9], and RG [14:12]. Drive Current Values: 0 = Off, 1 = 4.3 mA, 2 = 8.6 mA, 3 = 12.9 mA, 4 = 17.2 mA, 5 = 21.5 mA, 6 = 25.8 mA, 7 = 30.1 mA.
63	[11:0]	00024	SAMPCONTROL	SHP/SHD Sample Control. SHP Sampling Location [5:0]. SHD Sampling Location [11:6].
64	[5:0]	0	DOUTPHASE	DOUT Phase Control.

Table 14. AFE Operation Register Detail

Address	Data Bit Content	Default Value	Name	Description
00	[1:0]	0	PWRDOWN	0 = Normal Operation. 1 = Reference Standby. 2/3 = Total Power-Down
	[2]	1	CLPENABLE	0 = Disable OB Clamp. 1 = Enable OB Clamp.
	[3]	0	CLPSPEED	0 = Select Normal OB Clamp Settling. 1 = Select Fast OB Clamp Settling.
	[4]	0	FASTUPDATE	0 = Ignore VGA Update. 1 = Very Fast Clamping when VGA Is Updated.
	[5]	0	PBLK_LVL	DOUT Value during PBLK. 0 = Blank to Zero. 1 = Blank to Clamp Level.
	[7:6]	0	TEST MODE	Test Operation Only. Set to zero.
	[8]	0	DCBYP	0 = Enable DC restore circuit. 1 = Bypass DC Restore Circuit during PBLK.
	[9]	0	TESTMODE	Test Operation Only. Set to zero.
	[11:10]	0	CDSGAIN	Adjustment of CDS Gain. 0 = 0 dB. 01 = −2 dB. 10 = −4 dB. 11 = 0 dB.

Table 15. AFE Control Register Detail

Address	Data Bit Content	Default Value	Name	Description
03	[1:0]	0	COLORSTEER	0 = Off. 1 = Progressive. 2 = Interlaced. 3 = Three Field.
	[2]	1	PxGAENABLE	0 = Disable PxGA. 1 = Enable PxGA.
	[3]	0	DOUTDISABLE	0 = Data Outputs Are Driven. 1 = Data Outputs Are Three-Stated.
	[4]	0	DOUTLATCH	0 = Latch Data Outputs with DOUT Phase. 1 = Output Latch Transparent.
	[5]	0	GRAYENCODE	0 = Binary Encode Data Outputs. 1 = Gray Encode Data Outputs.

PRECISION TIMING HIGH SPEED TIMING GENERATION

The AD9949 generates flexible high speed timing signals using the *Precision Timing* core. This core is the foundation for generating the timing used for both the CCD and the AFE: the reset gate (RG), horizontal drivers (H1 to H4), and the SHP/SHD sample clocks. A unique architecture makes it routine for the system designer to optimize image quality by providing precise control over the horizontal CCD readout and the AFE correlated double sampling.

TIMING RESOLUTION

The *Precision Timing* core uses a 1× master clock input (CLI) as a reference. This clock should be the same as the CCD pixel clock frequency. Figure 16 illustrates how the internal timing core divides the master clock period into 48 steps or edge positions. Therefore, the edge resolution of the *Precision Timing* core is (t_{CLI}/48). For more information on using the CLI input, refer to the Applications Information section.

HIGH SPEED CLOCK PROGRAMMABILITY

Figure 17 shows how the high speed clocks, RG, H1 to H4, SHP, and SHD, are generated. The RG pulse has programmable rising and falling edges and may be inverted using the polarity control. The horizontal clocks H1 and H3 have programmable rising and falling edges and polarity control. The H2 and H4 clocks are always inverses of H1 and H3, respectively. Table 16 summarizes the high speed timing registers and their parameters.

Each edge location setting is 6 bits wide, but only 48 valid edge locations are available. Therefore, the register values are mapped into four quadrants, with each quadrant containing 12 edge locations. Table 17 shows the correct register values for the corresponding edge locations.

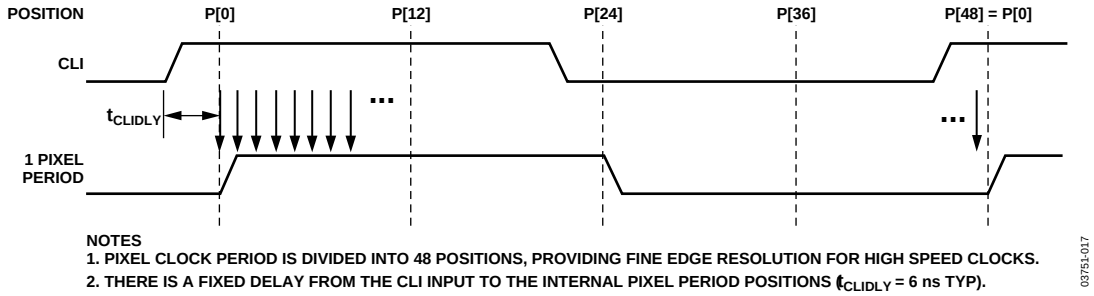

Figure 16. High Speed Clock Resolution from CLI Master Clock Input

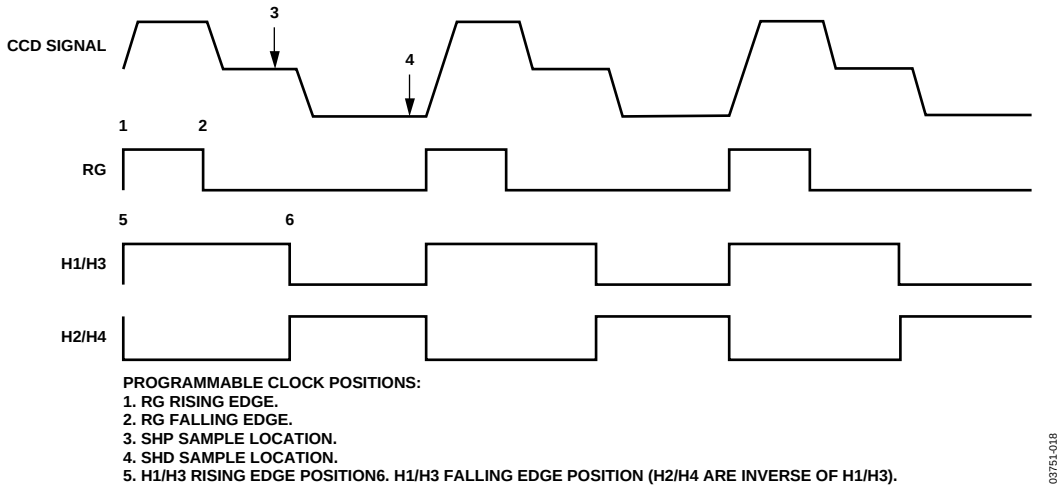

Figure 17. High Speed Clock Programmable Locations

Table 16. H1CONTROL, RGCONTROL, DRVCONTROL, and SAMPCONTROL Register Parameters

Parameter	Length	Range	Description
Polarity	1b	High/Low	Polarity Control for H1/H3 and RG (0 = No Inversion, 1 = Inversion).
Positive Edge	6b	0 to 47 Edge Location	Positive Edge Location for H1/H3 and RG.
Negative Edge	6b	0 to 47 Edge Location	Negative Edge Location for H1/H3 and RG.
Sample Location	6b	0 to 47 Sample Location	Sampling Location for SHP and SHD.
Drive Control	3b	0 to 7 Current Steps	Drive Current for H1 to H4 and RG Outputs, 0 to 7 Steps of 4.1 mA Each.
DOUT Phase	6b	0 to 47 Edge Location	Phase Location of Data Outputs with Respect to Pixel Period.

Table 17. *Precision Timing* Edge Locations

Quadrant	Edge Location (Decimal)	Register Value (Decimal)	Register Value (Binary)
I	0 to 11	0 to 11	000000 to 001011
II	12 to 23	16 to 27	010000 to 011011
III	24 to 35	32 to 43	100000 to 101011
IV	36 to 47	48 to 59	110000 to 111011

H-DRIVER AND RG OUTPUTS

In addition to the programmable timing positions, the AD9949 features on-chip output drivers for the RG and H1 to H4 outputs. These drivers are powerful enough to directly drive the CCD inputs. The H-driver and RG driver current can be adjusted for optimum rise/fall time into a particular load by using the DRVCONTROL register (Address 0×62). The DRVCONTROL register is divided into five different 3-bit values, each one being adjustable in 4.1 mA increments. The minimum setting of 0 is equal to OFF or three-state, and the maximum setting of 7 is equal to 30.1 mA.

As shown in Figure 18, the H2/H4 outputs are inverses of H1/H3. The internal propagation delay resulting from the signal inversion is less than l ns, which is significantly less than the typical rise time driving the CCD load. This results in a H1/H2 crossover voltage at approximately 50% of the output swing. The crossover voltage is not programmable.

DIGITAL DATA OUTPUTS

The AD9949 data output phase is programmable using the DOUTPHASE register (Address 0×64). Any edge from 0 to 47 may be programmed, as shown in Figure 19. The pipeline delay for the digital data output is shown in Figure 20.

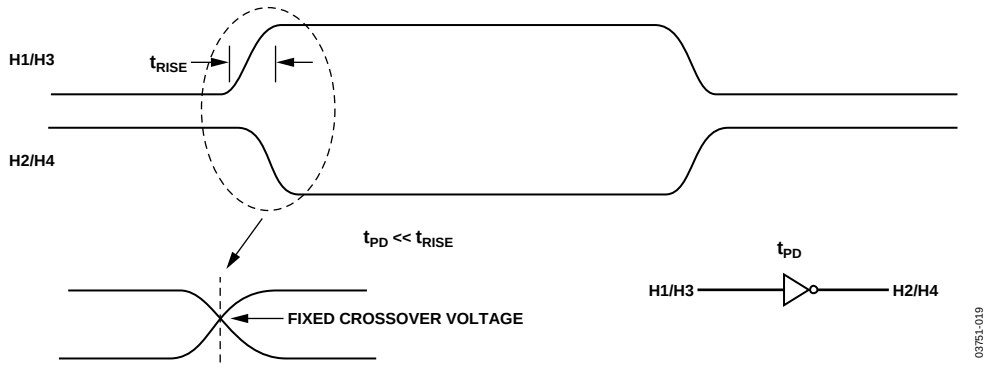

Figure 18. H-Clock Inverse Phase Relationship

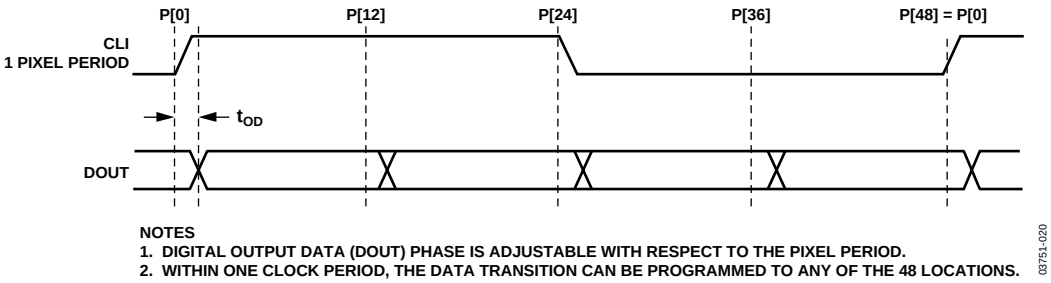

Figure 19. Digital Output Phase Adjustment

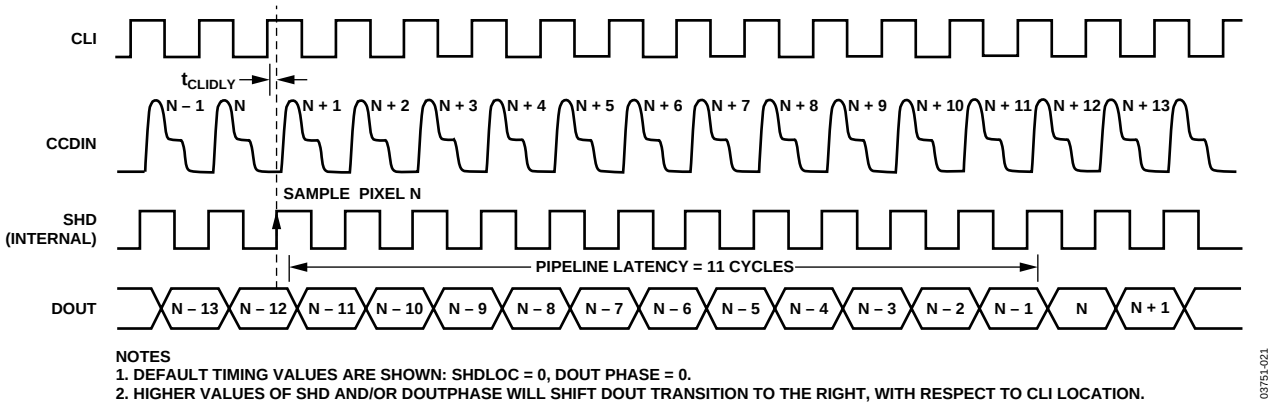

Figure 20. Pipeline Delay for Digital Data Output

HORIZONTAL CLAMPING AND BLANKING

The AD9949's horizontal clamping and blanking pulses are fully programmable to suit a variety of applications. Individual sequences are defined for each signal, which are then organized into multiple regions during image readout. This allows the dark pixel clamping and blanking patterns to be changed at each stage of the readout to accommodate different image transfer timing and high speed line shifts.

INDIVIDUAL CLPOB AND PBLK SEQUENCES

The AFE horizontal timing consists of CLPOB and PBLK, as shown in Figure 21. These two signals are independently programmed using the parameters shown in Table 18. The start polarity, first toggle position, and second toggle position are fully programmable for each signal. The CLPOB and PBLK signals are active low and should be programmed accordingly. Up to four individual sequences can be created for each signal.

INDIVIDUAL HBLK SEQUENCES

The HBLK programmable timing shown in Figure 22 is similar to CLPOB and PBLK. However, there is no start polarity control. Only the toggle positions are used to designate the start and the stop positions of the blanking period. Additionally, there is a polarity control, HBLKMASK, which designates the polarity of the horizontal clock signals H1 to H4 during the blanking period. Setting HBLKMASK high sets H1 = H3 = low and H2 = H4 = high during the blanking, as shown in Figure 23. Up to four individual sequences are available for HBLK.

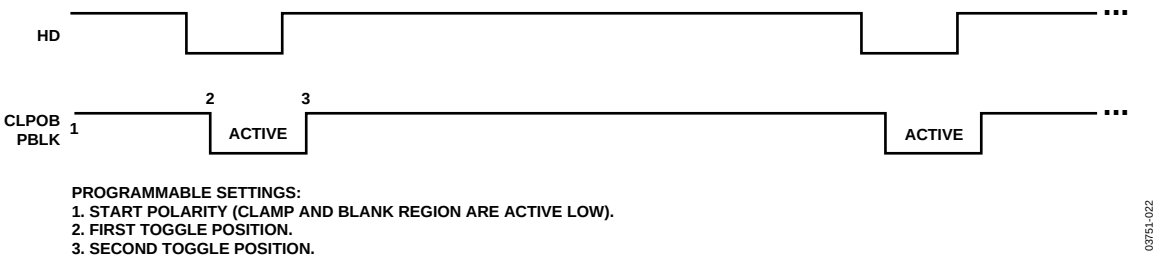

Figure 21. Clamp and Preblank Pulse Placement

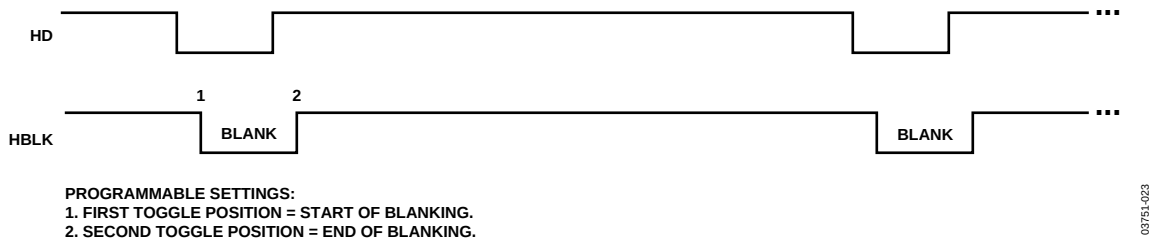

Figure 22. Horizontal Blanking (HBLK) Pulse Placement

Table 18. CLPOB and PBLK Individual Sequence Parameters

Parameter	Length	Range	Description
Polarity	1b	High/Low	Starting Polarity of Clamp and PBLK Pulses for Sequences 0 to 3.
Toggle Position 1	12b	0 to 4095 Pixel Location	First Toggle Position within the Line for Sequences 0 to 3.
Toggle Position 2	12b	0 to 4095 Pixel Location	Second Toggle Position within the Line for Sequences 0 to 3.

Table 19. HBLK Individual Sequence Parameters

Parameter	Length	Range	Description
HBLKMASK	1b	High/Low	Masking Polarity for H1 for Sequences 0 to 3 (0 = H1 Low, 1 = H1 High).
Toggle Position 1	12b	0 to 4095 Pixel Location	First Toggle Position within the Line for Sequences 0 to 3.
Toggle Position 2	12b	0 to 4095 Pixel Location	Second Toggle Position within the Line for Sequences 0 to 3.
Toggle Position 3	12b	0 to 4095 Pixel Location	Third Toggle Position within the Line for Sequences 0 to 3.
Toggle Position 4	12b	0 to 4095 Pixel Location	Fourth Toggle Position within the Line for Sequences 0 to 3.
Toggle Position 5	12b	0 to 4095 Pixel Location	Fifth Toggle Position within the Line for Sequences 0 to 3.
Toggle Position 6	12b	0 to 4095 Pixel Location	Sixth Toggle Position within the Line for Sequences 0 to 3.

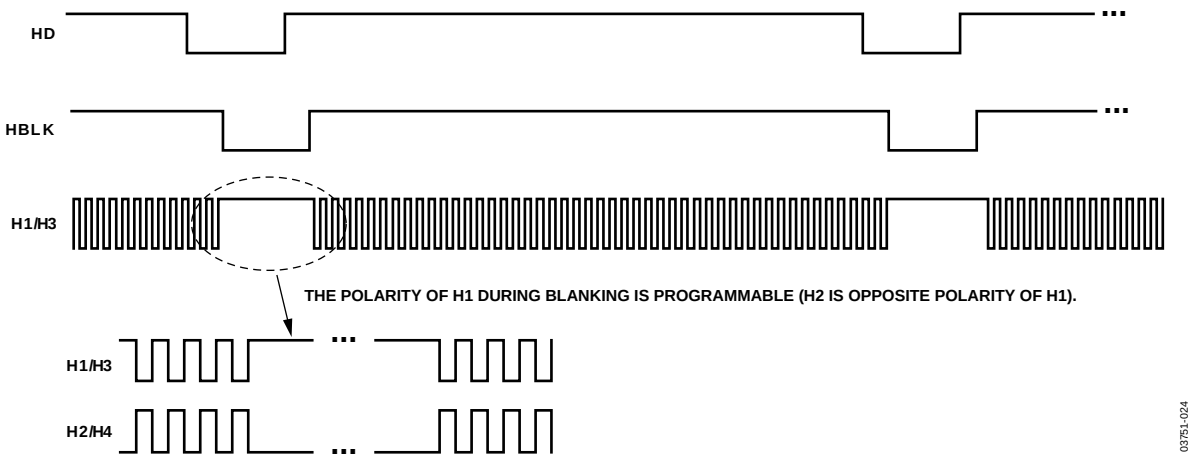

Figure 23. HBLK Masking Control

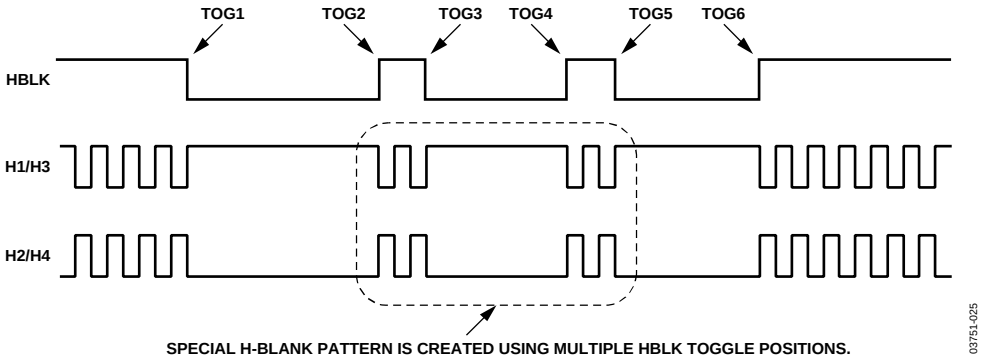

Figure 24. Generating Special HBLK Patterns

Table 20. Horizontal Sequence Control Parameters for CLPOB, PBLK, and HBLK

Register	Length	Range	Description
SCP	12b	0 to 4095 Line Number	CLOB/PBLK/HBLK SCP to Define Horizontal Regions 0 to 3.
SPTR	2b	0 to 3 Sequence Number	Sequence Pointer for Horizontal Regions 0 to 3.

GENERATING SPECIAL HBLK PATTERNS

Six toggle positions are available for HBLK. Normally, only two of the toggle positions are used to generate the standard HBLK interval. However, the additional toggle positions may be used to generate special HBLK patterns, as shown in Figure 24. The pattern in this example uses all six toggle positions to generate two extra groups of pulses during the HBLK interval. By changing the toggle positions, different patterns can be created.

HORIZONTAL SEQUENCE CONTROL

The AD9949 uses sequence change positions (SCP) and sequence pointers (SPTR) to organize the individual horizontal sequences. Up to four SCPs are available to divide the readout into four separate regions, as shown in Figure 25. The SCP0 is always hard-coded to Line 0, and SCP1 to SCP3 are register programmable. During each region bounded by the SCP, the SPTR registers designate which sequence is used by each signal. CLPOB, PBLK, and HBLK each have a separate set of SCPs. For example, CLPOBSCP1 defines Region 0 for CLPOB, and in that region any of the four individual CLPOB sequences may be selected with the CLPOBSPTR register. The next SCP defines a new region and in that region, each signal can be assigned to a different individual sequence. The sequence control registers are summarized in Table 20.

EXTERNAL HBLK SIGNAL

The AD9949 can also be used with an external HBLK signal. Setting the HBLKDIR register (Address 0×40) to high disables the internal HBLK signal generation. The polarity of the external signal is specified using the HBLKPOL register, and the masking polarity of H1 is specified using the HBLKMASK register. Table 21 summarizes the register values when using an external HBLK signal.

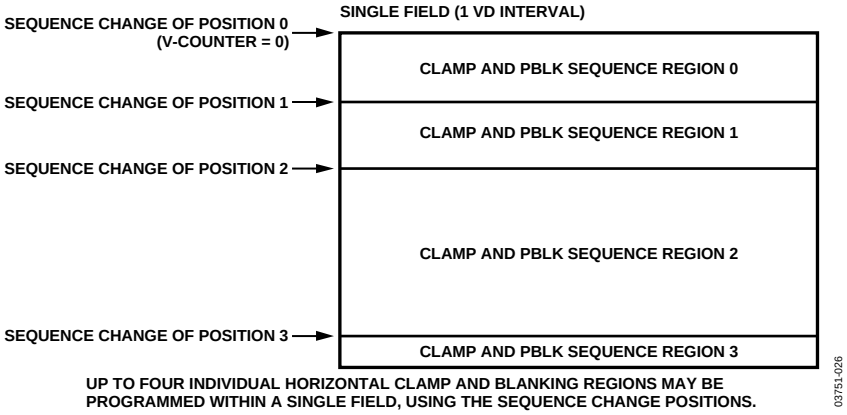

Figure 25. Clamp and Blanking Sequence Flexibility

Table 21. External HBLK Register Parameters

Register	Length	Range	Description
HBLKDIR	1b	High/Low	Specifies HBLK Internally Generated or Externally Supplied. 1 = External.
HBLKPOL	1b	High/Low	External HBLK Active Polarity. 0 = Active Low. 1 = Active High.
HBLKEXTMASK	1b	High/Low	External HBLK Masking Polarity. 0 = Mask H1 Low. 1 = Mask H1 High.

H-COUNTER SYNCHRONIZATION

The H-Counter reset occurs seven CLI cycles following the HD falling edge. The PxGA steering is synchronized with the reset of the internal H-Counter (see Figure 26).

As mentioned in the H-Counter Behavior section, the AD9949 H-counter rolls over to zero and continues counting when the maximum counter length is exceeded. The newer AD9949A product does not roll over but holds at its maximum value until the next HD rising edge occurs.

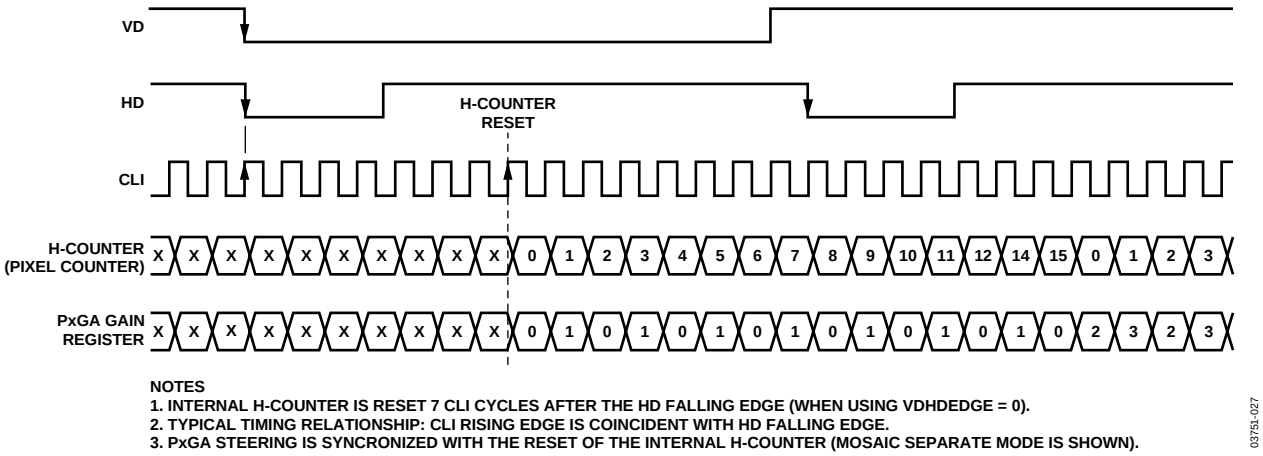

Figure 26. H-Counter Synchronization

POWER-UP PROCEDURE

RECOMMENDED POWER-UP SEQUENCE

When the AD9949 is powered up, the following sequence is recommended (refer to Figure 27 for each step):

1. Turn on the power supplies for the AD9949.
2. Apply the master clock input, CLI, VD, and HD.
3. Although the AD9949 contains an on-chip, power-on reset, a software reset of the internal registers is recommended. Write a 1 to the SW_RST register (Address 0×10), which resets the internal registers to their default values. This bit is self-clearing and automatically resets back to 0.
4. The *Precision Timing* core must be reset by writing a 0 to the TGCORE_RSTB register (Address 0×12) followed by writing a l to the TGCORE_RSTB register. This starts the internal timing core operation.
5. Write a 1 to the PREVENTUPDATE register (Address 0×14). This prevents the updating of the serial register data.
6. Write to the desired registers to configure high speed timing and horizontal timing.
7. Write a 1 to the OUT_CONTROL register (Address 0×11). This allows the outputs to become active after the next VD/HD rising edge.
8. Write a 0 to the PREVENTUPDATE register (Address 0×14). This allows the serial information to be updated at next VD/HD falling edge.
9. The next VD/HD falling edge allows register updates to occur, including OUT_CONTROL, which enables all clock outputs.

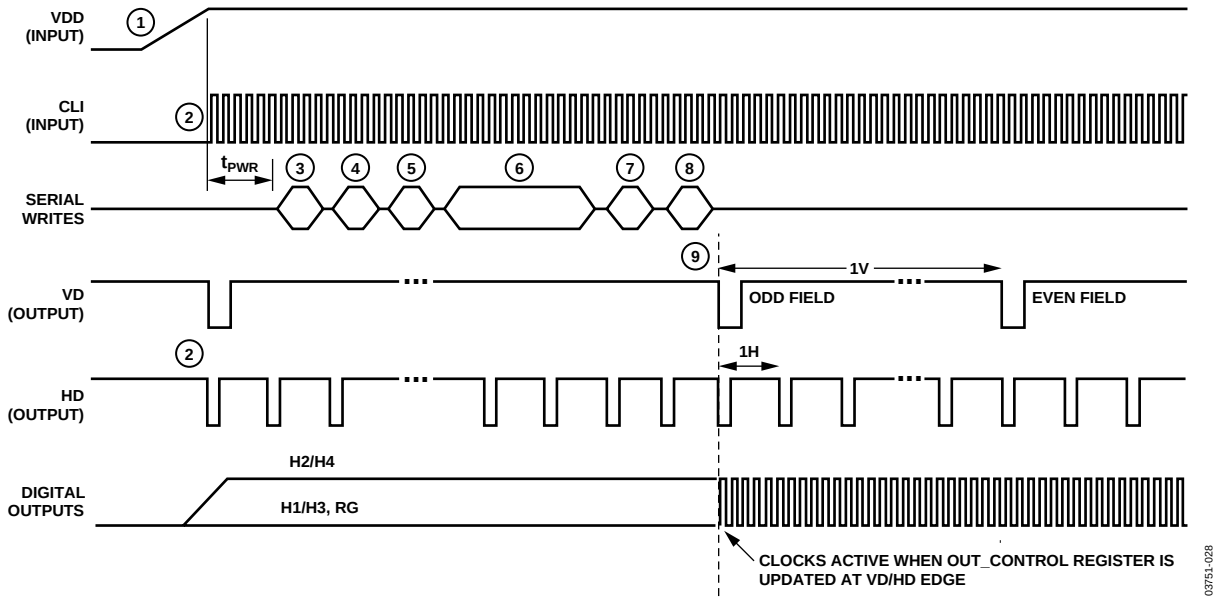

Figure 27. Recommended Power-Up Sequence

ANALOG FRONT END DESCRIPTION AND OPERATION

The AD9949 signal processing chain is shown in Figure 28. Each processing step is essential in achieving a high quality image from the raw CCD pixel data.

DC RESTORE

To reduce the large dc offset of the CCD output signal, a dc restore circuit is used with an external 0.1 µF series coupling capacitor. This restores the dc level of the CCD signal to approximately 1.5 V to be compatible with the 3 V supply voltage of the AD9949.

CORRELATED DOUBLE SAMPLER

The CDS circuit samples each CCD pixel twice to extract the video information and reject low frequency noise. The timing shown in Figure 17 illustrates how the two internally generated CDS clocks, SHP and SHD, are used to sample the reference level and the CCD signal level, respectively. The placement of the SHP and SHD sampling edges is determined by the setting of the SAMPCONTROL register located at Address 0×63. Placement of these two clock signals is critical in achieving the best performance from the CCD.

The gain in the CDS is fixed at 0 dB by default. Using Bits D10 and D11 in the AFE operation register, the gain may be reduced to −2 dB or −4 dB. This allows the AD9949 to accept an input signal of greater than 1 V p-p. See Table 14 for register details.

Table 22. Adjustable CDS Gain

Operation Register Bits			
D11	**D10**	**CDS Gain**	**Max CDS Input**
0	0	0 dB	1.0 V p-p
0	1	−2 dB	1.2 V p-p
1	0	−4 dB	1.6 V p-p
1	1	0 dB	1.0 V p-p

PxGA

The PxGA provides separate gain adjustment for the individual color pixels. A programmable gain amplifier with four separate values, the PxGA has the capability to multiplex its gain value on a pixel-to-pixel basis (see Figure 29). This allows lower output color pixels to be gained up to match higher output color pixels. Also, the PxGA may be used to adjust the colors for white balance, reducing the amount of digital processing that is needed. The four different gain values are switched according to the color steering circuitry. Three different color steering modes for different types of CCD color filter arrays are programmable in the AFE CTLMODE register at Address 0×03 (see Figure 33 to Figure 35 for timing examples). For example, progressive steering mode accommodates the popular Bayer arrangement of red, green, and blue filters (see Figure 30).

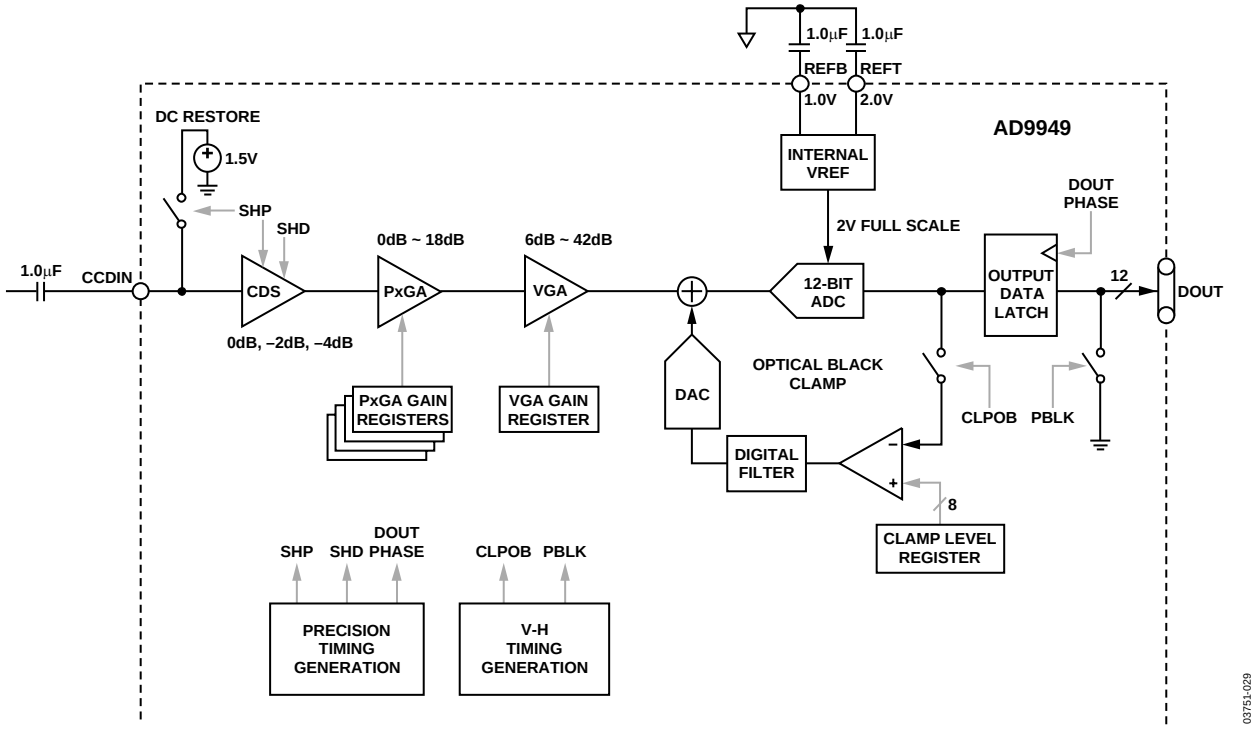

Figure 28. Analog Front End Functional Block Diagram

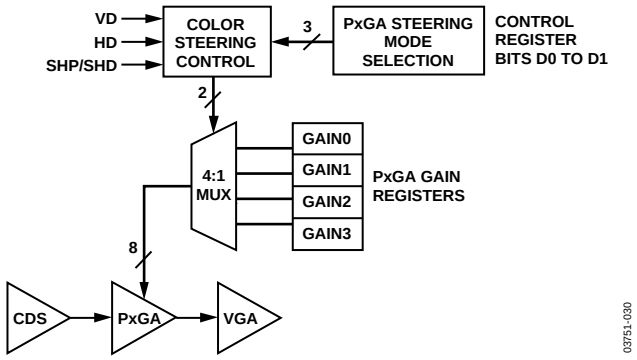

Figure 29. PxGA Block Diagram

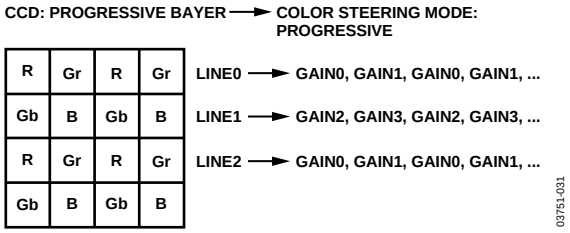

Figure 30. CCD Color Filter Example—Progressive Scan

The same Bayer pattern can also be interlaced, and the interlaced mode should be used with this type of CCD (see Figure 31). The color steering performs the proper multiplexing of the R, G, and B gain values (loaded into the PxGA gain registers) and is synchronized by the user with vertical (VD) and horizontal (HD) sync pulses. For timing information, see Figure 34.

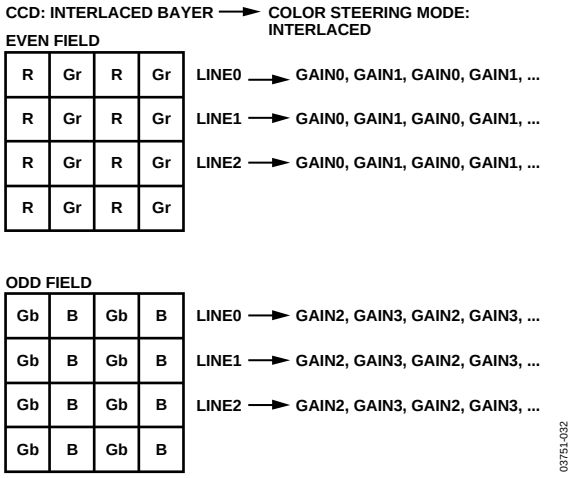

Figure 31. CCD Color Filter Example—Interlaced Readout

A third type of readout uses the Bayer pattern divided into three different readout fields. The 3-field mode should be used with this type of CCD (see Figure 32). The color steering performs the proper multiplexing of the R, G, and B gain values (loaded into the PxGA gain registers) and is synchronized by the user with vertical (VD) and horizontal (HD) sync pulses. For timing information, see Figure 35.

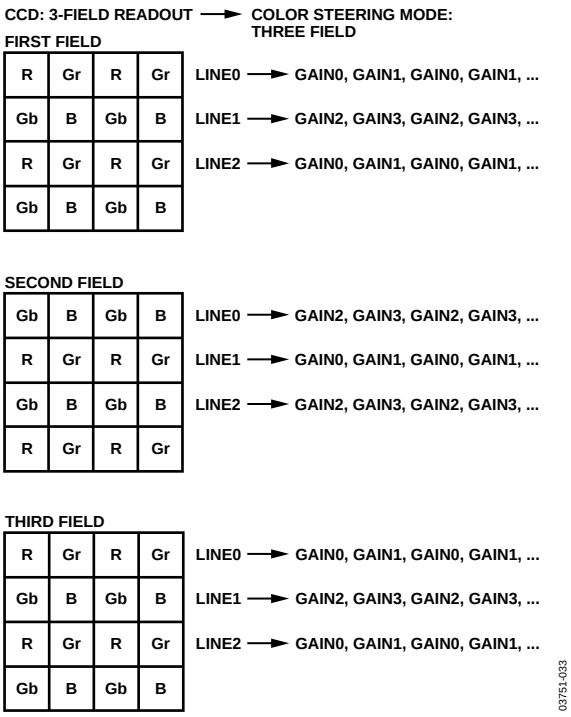

Figure 32. CCD Color Filter Example—Three-Field Readout

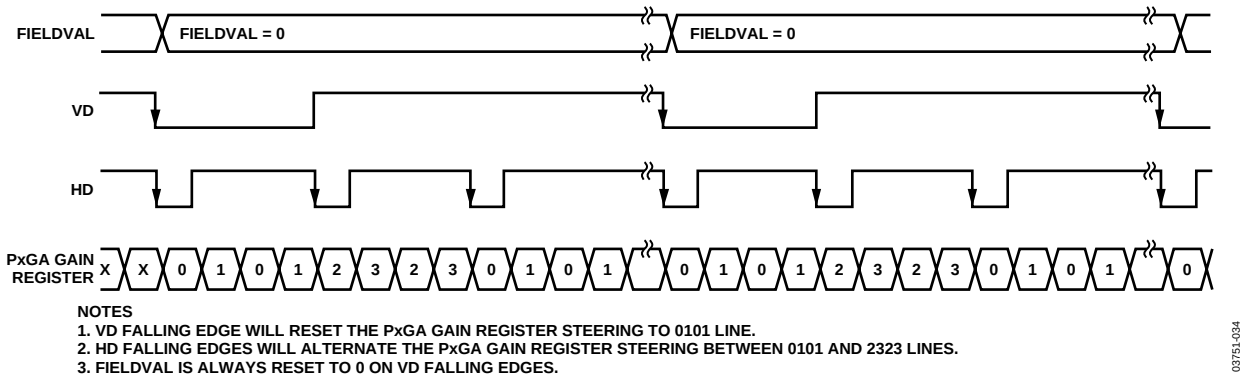

Figure 33. PxGA Color Steering—Progressive Mode

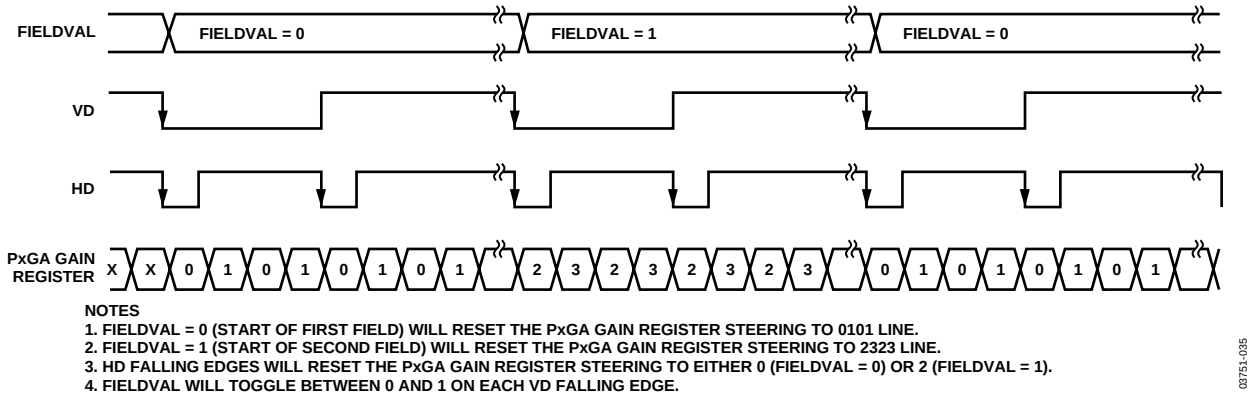

Figure 34. PxGA Color Steering—Interlaced Mode

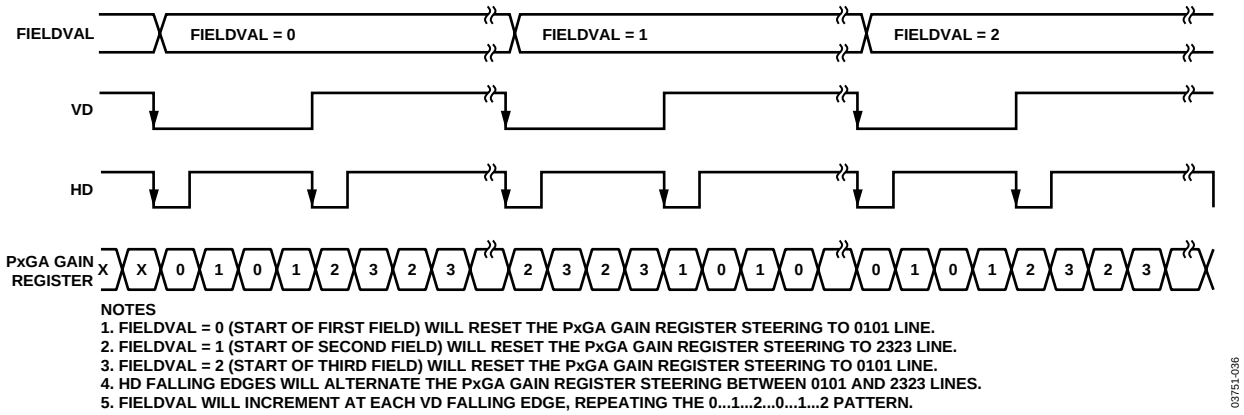

Figure 35. PxGA Color Steering—Three-Field Mode

The PxGA gain for each of the four channels is variable from 0 dB to 18 dB in 512 steps, specified using the PxGA GAIN01 and PxGA GAIN23 registers. The PxGA gain curve is shown in Figure 36. The PxGA GAIN01 register contains nine bits each for PxGA Gain0 and Gain1, and the PxGA GAIN23 register contains nine bits each for PxGA Gain2 and Gain3.

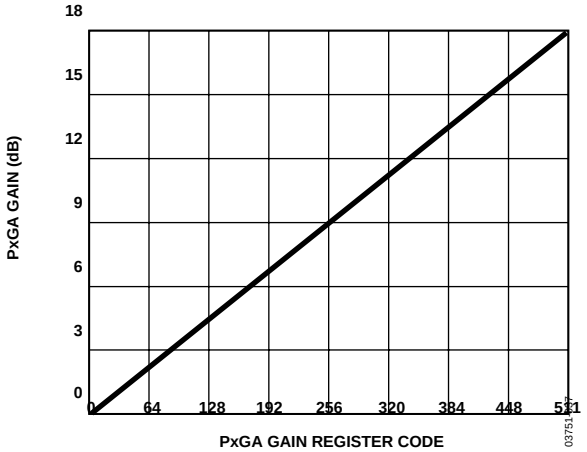

Figure 36. PxGA Gain Curve

VARIABLE GAIN AMPLIFIER

The VGA stage provides a gain range of 6 dB to 42 dB, programmable with 10-bit resolution through the serial digital interface. The minimum gain of 6 dB is needed to match a 1 V input signal with the ADC full-scale range of 2 V. When compared to 1 V full-scale systems, the equivalent gain range is 0 dB to 36 dB.

The VGA gain curve follows a linear-in-dB characteristic. The exact VGA gain can be calculated for any gain register value by using the equation

$$Gain\ (\text{db}) = (0.0351 \times Code) + 6\ \text{dB}$$

where the code range is 0 to 1023.

There is a restriction on the maximum amount of gain that can be applied to the signal. The PxGA can add as much as 18 dB, and the VGA is capable of providing up to 42 dB. However, the maximum total gain from the PxGA and VGA is restricted to 42 dB. If the registers are programmed to specify a total gain higher than 42 dB, the total gain is clipped at 42 dB.

ADC

The AD9949 uses a high performance ADC architecture, optimized for high speed and low power. DNL performance is typically better than 0.5 LSB. The ADC uses a 2 V input range. See Figure 9 and Figure 10 for typical linearity and noise performance plots for the AD9949.

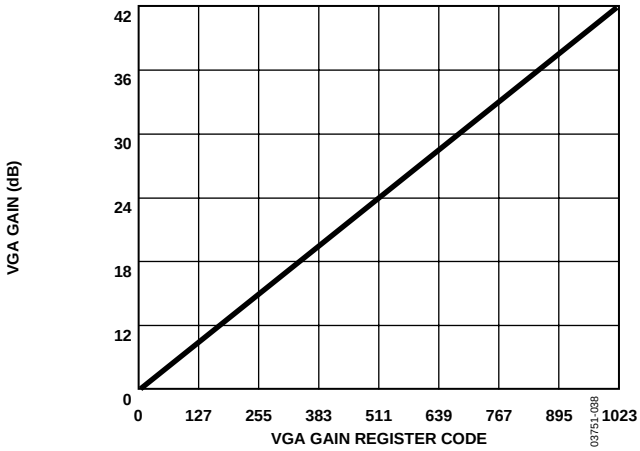

Figure 37. VGA Gain Curve (PxGA Not Included)

OPTICAL BLACK CLAMP

The optical black clamp loop is used to remove residual offsets in the signal chain and to track low frequency variations in the CCD's black level. During the optical black (shielded) pixel interval on each line, the ADC output is compared with a fixed black level reference, selected by the user in the clamp level register. The value can be programmed between 0 LSB and 255 LSB in 256 steps. The resulting error signal is filtered to reduce noise, and the correction value is applied to the ADC input through a DAC. Normally, the optical black clamp loop is turned on once per horizontal line, but this loop can be updated more slowly to suit a particular application. If external digital clamping is used during the postprocessing, the AD9949 optical black clamping may be disabled using Bit D2 in the OPRMODE register. When the loop is disabled, the clamp level register may still be used to provide programmable offset adjustment.

The CLPOB pulse should be placed during the CCD's optical black pixels. It is recommended that the CLPOB pulse duration be at least 20 pixels wide to minimize clamp noise. Shorter pulse widths may be used, but clamp noise may increase and the ability to track low frequency variations in the black level will be reduced. See the Horizontal Clamping and Blanking and Applications Information sections for timing examples.

DIGITAL DATA OUTPUTS

The AD9949 digital output data is latched using the DOUT phase register value, as shown in Figure 28. Output data timing is shown in Figure 19 and Figure 20. It is also possible to leave the output latches transparent, so that the data outputs are valid immediately from the ADC. Programming the AFE control register Bit D4 to a 1 sets the output latches transparent. The data outputs can also be disabled (three-stated) by setting the AFE control register Bit D3 to a 1.

The data output coding is normally straight binary, but the coding may be changed to gray coding by setting the AFE control register Bit D5 to a 1.

APPLICATIONS INFORMATION

CIRCUIT CONFIGURATION

The AD9949 recommended circuit configuration is shown in Figure 38. Achieving good image quality from the AD9949 requires careful attention to PCB layout. All signals should be routed to maintain low noise performance. The CCD output signal should be directly routed to Pin 27 through a 0.1 µF capacitor. The master clock CLI should be carefully routed to Pin 25 to minimize interference with the CCDIN, REFT, and REFB signals.

The digital outputs and clock inputs are located on Pins 1 to 13 and Pins 31 to 40 and should be connected to the digital ASIC away from the analog and CCD clock signals. Placing series resistors close to the digital output pins may help to reduce digital code transition noise. If the digital outputs must drive a load larger than 20 pF, buffering is recommended to minimize additional noise. If the digital ASIC can accept gray code, the AD9949's outputs can be selected to output data in gray code format using the control register Bit D5. Gray coding helps reduce potential digital transition noise compared with binary coding.

The H1–H4 and RG traces should have low inductance to avoid excessive distortion of the signals. Heavier traces are recommended because of the large transient current demand on H1–H4 from the capacitive load of the CCD. If possible, physically locating the AD9949 closer to the CCD will reduce the inductance on these lines. As always, the routing path should be as direct as possible from the AD9949 to the CCD.

GROUNDING AND DECOUPLING RECOMMENDATIONS

As shown in Figure 38, a single ground plane is recommended for the AD9949. This ground plane should be as continuous as possible, particularly around Pins 23 to 30. This ensures that all analog decoupling capacitors provide the lowest possible impedance path between the power and bypass pins and their respective ground pins. All high frequency decoupling capacitors should be located as close as possible to the package pins. It is recommended that the exposed paddle on the bottom of the package be soldered to a large pad, with multiple vias connecting the pad to the ground plane.

All the supply pins must be decoupled to ground with good quality, high frequency chip capacitors. There should also be a 4.7 µF or larger bypass capacitor for each main supply—AVDD, RGVDD, HVDD, and DRVDD—although this is not necessary for each individual pin. In most applications, it is easier to share the supply for RGVDD and HVDD, which may be done as long as the individual supply pins are separately bypassed. A separate 3 V supply may be used for DRVDD, but this supply pin should still be decoupled to the same ground plane as the rest of the chip. A separate ground for DRVSS is not recommended.

The reference bypass pins (REFT, REFB) should be decoupled to ground as close as possible to their respective pins. The analog input (CCDIN) capacitor should also be located close to the pin.

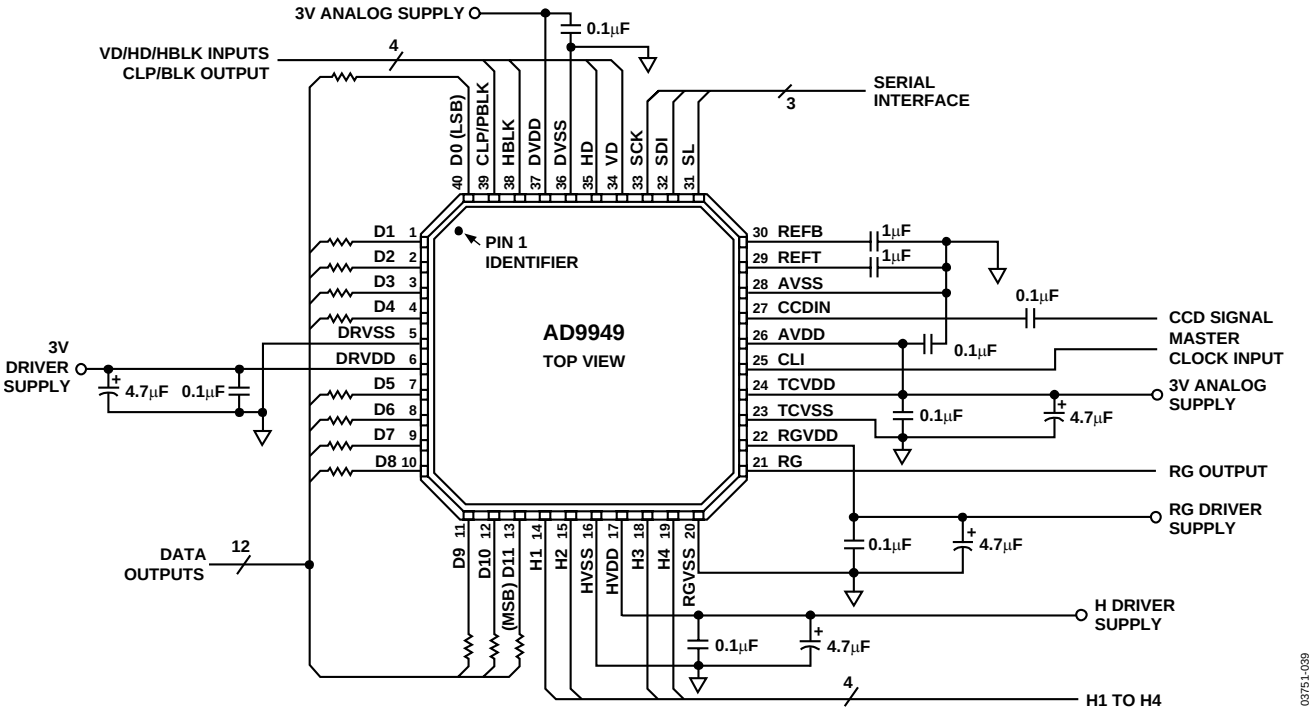

Figure 38. Recommended Circuit Configuration

DRIVING THE CLI INPUT

The AD9949's master clock input (CLI) may be used in two different configurations, depending on the application. Figure 41 shows a typical dc-coupled input from the master clock source. When the dc-coupled technique is used, the master clock signal should be at standard 3 V CMOS logic levels. As shown in Figure 42, a 1000 pF ac-coupling capacitor may be used between the clock source and the CLI input. In this configuration, the CLI input is self-biased to the proper dc voltage level of approximately 1.4 V. When the ac-coupled technique is used, the master clock signal can be as low as ±500 mV in amplitude.

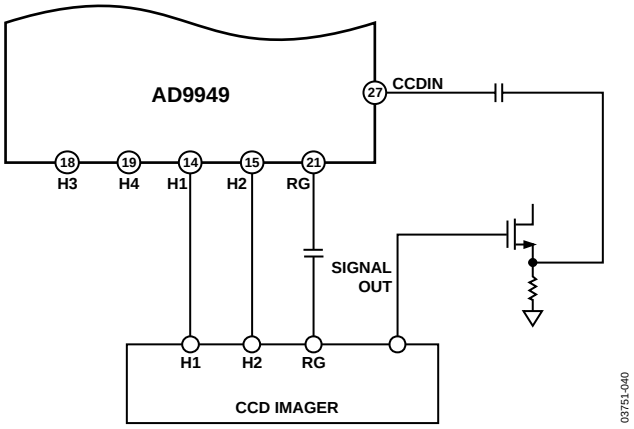

Figure 39. CCD Connections (2 H-Clock)

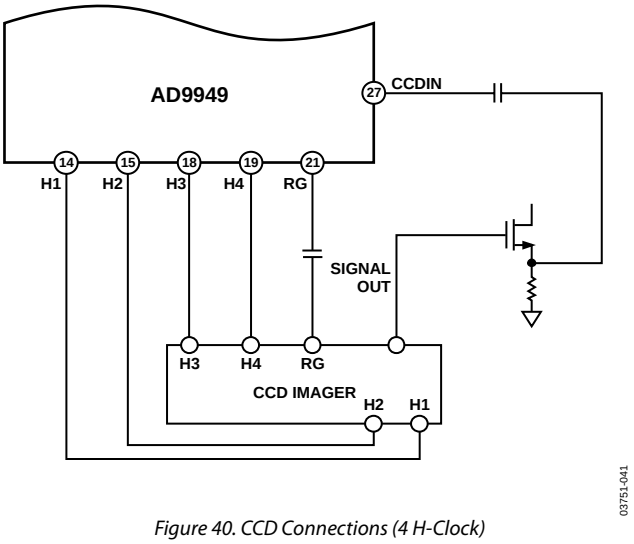

Figure 40. CCD Connections (4 H-Clock)

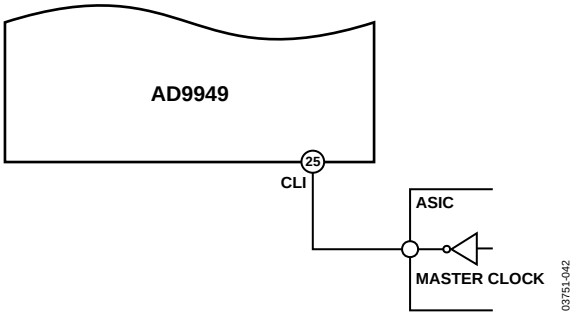

Figure 41. CLI Connection, DC-Coupled

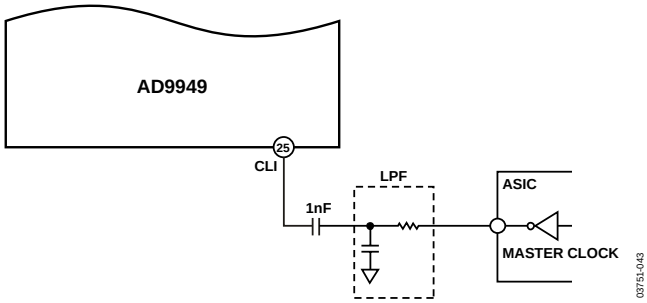

Figure 42. CLI Connection, AC-Coupled

HORIZONTAL TIMING SEQUENCE EXAMPLE

Figure 43 shows an example CCD layout. The horizontal register contains 28 dummy pixels, which occur on each line clocked from the CCD. In the vertical direction, there are 10 optical black (OB) lines at the front of the readout and two at the back of the readout. The horizontal direction has four OB pixels in the front and 48 in the back.

To configure the AD9949 horizontal signals for this CCD, three sequences can be used. Figure 44 shows the first sequence that should be used during vertical blanking. During this time, there are no valid OB pixels from the sensor, so the CLPOB signal is not used. PBLK may be enabled during this time, because no valid data is available.

Figure 45 shows the recommended sequence for the vertical OB interval. The clamp signals are used across the whole lines in order to stabilize the clamp loop of the AD9949.

Figure 46 shows the recommended sequence for the effective pixel readout. The 48 OB pixels at the end of each line are used for the CLPOB signal.

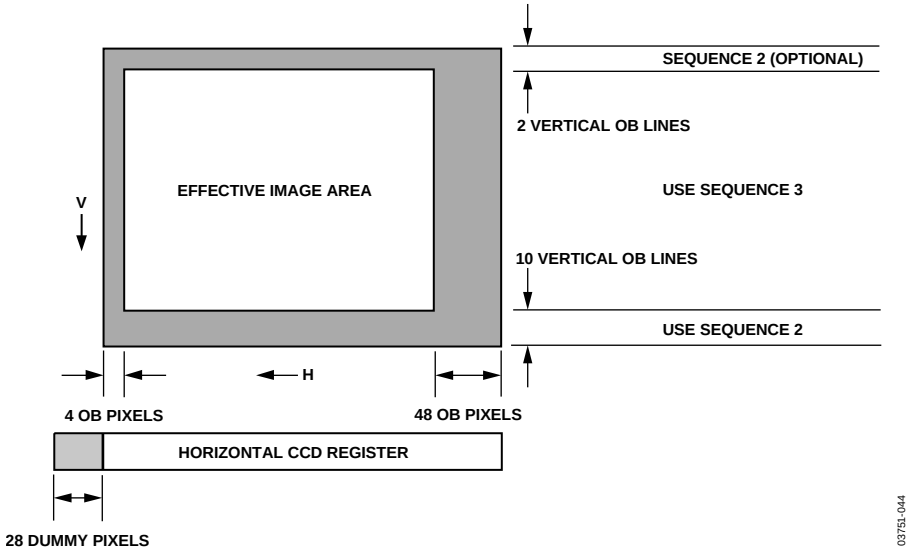

Figure 43. Example CCD Configuration

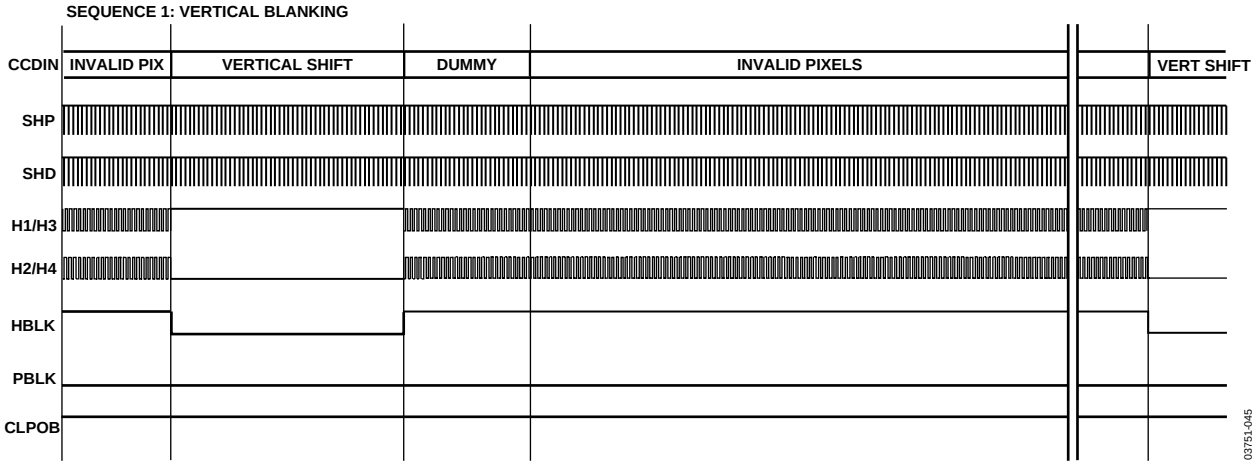

Figure 44. Horizontal Sequence During Vertical Blanking

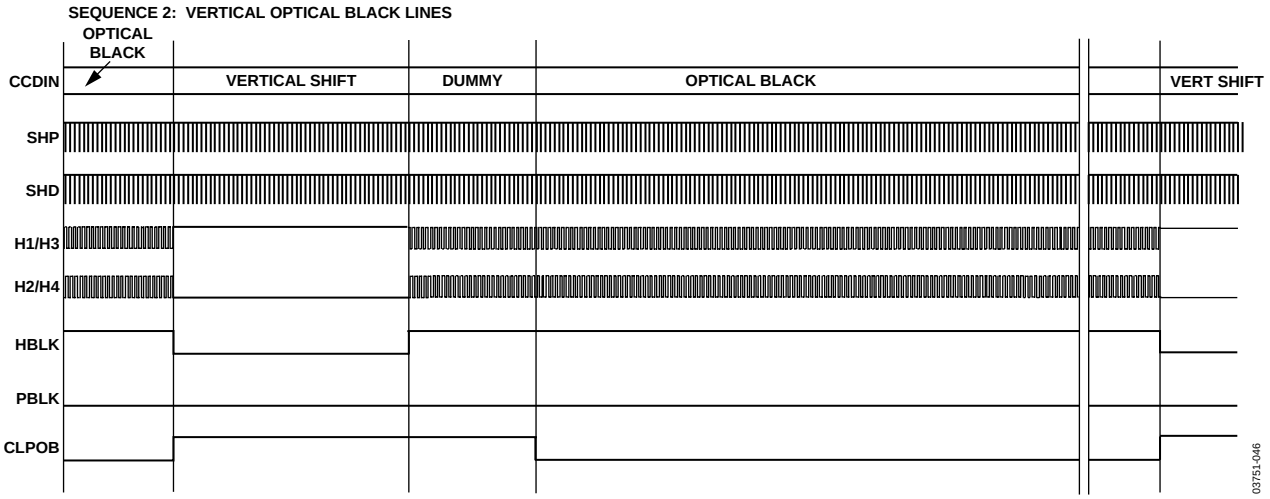

Figure 45. Horizontal Sequences During Vertical Optical Black Pixels

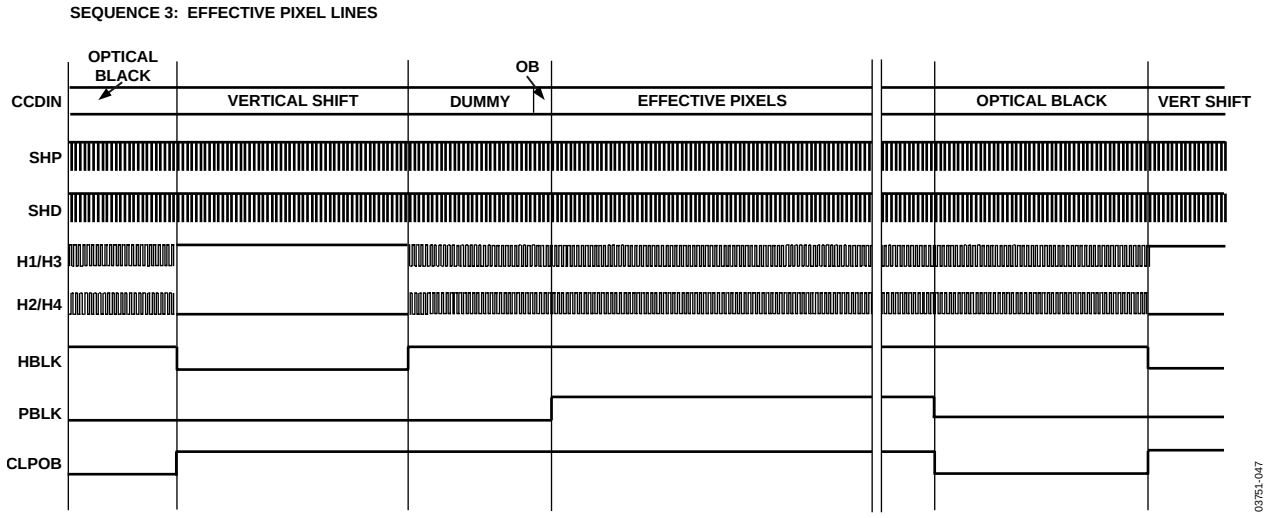

Figure 46. Horizontal Sequences During Effective Pixels

OUTLINE DIMENSIONS

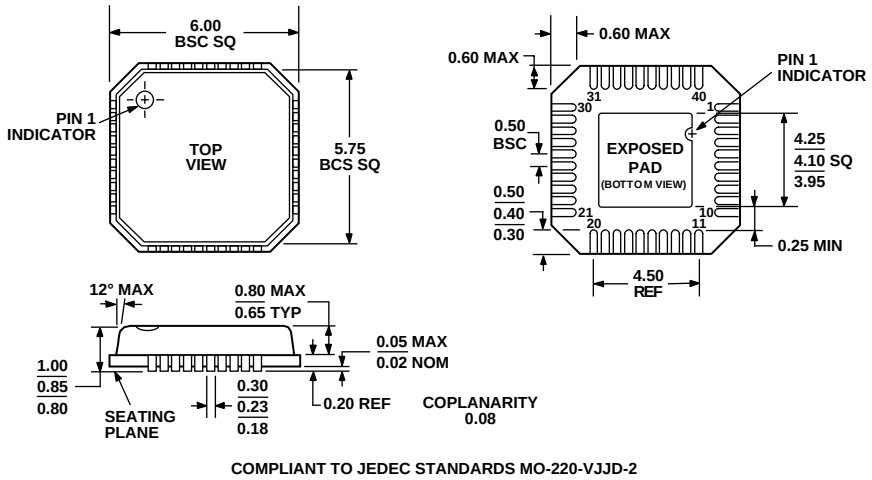

Figure 47. 40-Lead Lead Frame Chip Scale Package [LFCSP]
6 mm × 6 mm Body
(CP-40)
Dimensions shown in millimeters

ORDERING GUIDE

Model	Temperature Range	Package Description	Package Option
AD9949KCP	−20°C to +85°C	40-Lead Lead Frame Chip Scale Package (LFCSP)	CP-40
AD9949KCPRL	−20°C to +85°C	40-Lead Lead Frame Chip Scale Package (LFCSP)	CP-40
AD9949KCPZ[1]	−20°C to +85°C	40-Lead Lead Frame Chip Scale Package (LFCSP)	CP-40
AD9949KCPZRL[1]	−20°C to +85°C	40-Lead Lead Frame Chip Scale Package (LFCSP)	CP-40
AD9949AKCPZ[1, 2]	−20°C to +85°C	40-Lead Lead Frame Chip Scale Package (LFCSP)	CP-40
AD9949AKCPZRL[1, 2]	−20°C to +85°C	40-Lead Lead Frame Chip Scale Package (LFCSP)	CP-40

[1] Z = PB-free part.
[2] The AD9949A is recommended for new designs and supports CCD line lengths > 4096 pixels.

NOTES

NOTES

© 2004 Analog Devices, Inc. All rights reserved. Trademarks and registered trademarks are the property of their respective owners.
D03751–0–11/04(B)

ANALOG DEVICES

www.analog.com