FEMTOCLOCKS™ CRYSTAL-TO-LVDS FREQUENCY SYNTHESIZER W/INTEGRATED FANOUT BUFFER

ICS844246I

General Description

The ICS844246I is a Crystal-to-LVDS Clock Synthesizer/Fanout Buffer designed for Fibre Channel and Gigabit Ethernet applications and is a member of the HiperClockS™ family of High Performance Clock Solutions from IDT. The output frequency can be set using the frequency select pins and a 25MHz crystal for Ethernet frequencies, or a 26.5625MHz crystal for a Fibre Channel. The low phase noise characteristics of the ICS844246I make it an ideal clock for these demanding applications.

Features

- Six LVDS outputs
- Crystal oscillator interface
- Output frequency range: 53.125MHz to 333.3333MHz
- Crystal input frequency range: 25MHz to 33.333MHz
- RMS phase jitter at 125MHz, using a 25MHz crystal (1.875MHz to 20MHz): 0.39ps (typical)
- Full 3.3V or 3.3V core, 2.5V output supply mode
- -40°C to 85°C ambient operating temperature
- Available in both standard (RoHS 5) and lead-free (RoHS 6) packages

Select Function Table

Inputs			Function		
FB_SEL	N_SEL1	N_SEL0	M Divide	N Divide	M/N
0	0	0	20	2	10
0	0	1	20	4	5
0	1	0	20	5	4
0	1	1	20	8	2.5
1	0	0	24	3	8
1	0	1	24	4	6
1	1	0	24	6	4
1	1	1	24	12	2

Block Diagram

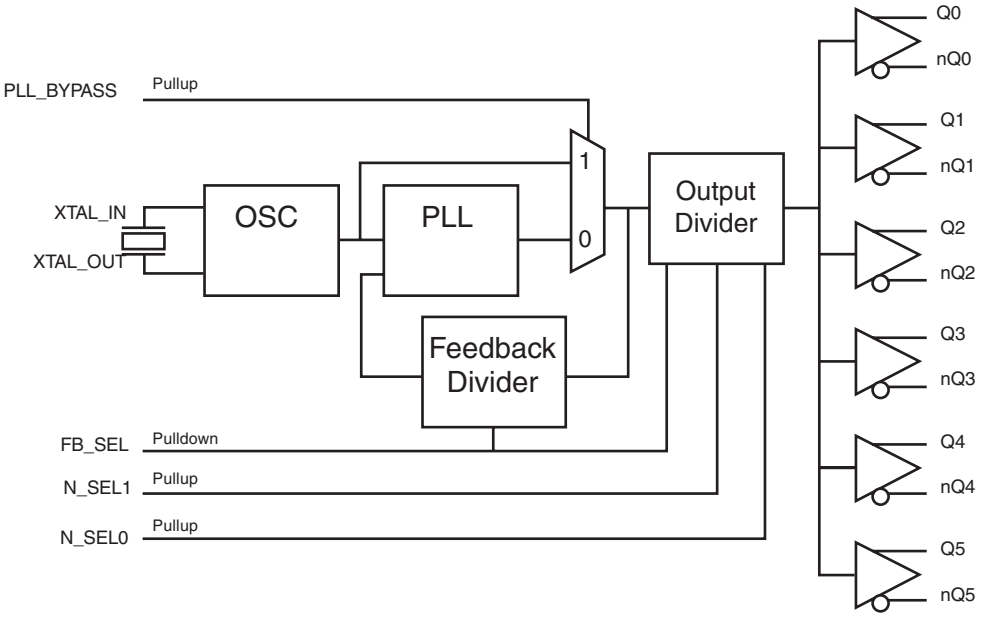

Pin Assignment

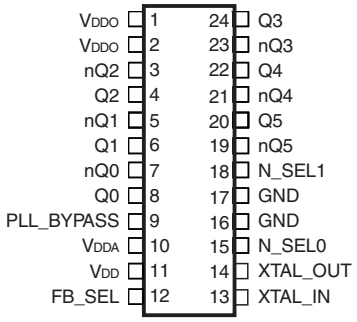

ICS844246I
24-Lead TSSOP, E-Pad
4.40mm x 7.8mm x 0.90mm
body package
G Package
Top View

The Preliminary Information presented herein represents a product in pre-production. The noted characteristics are based on initial product characterization and/or qualification. Integrated Device Technology, Incorporated (IDT) reserves the right to change any circuitry or specifications without notice.

TABLE 1. PIN DESCRIPTIONS

Number	Name	Type		Description
1, 2	V_{DDO}	Power		Output supply pins.
3, 4	nQ2, Q2	Output		Differential output pair. LVDS interface levels.
5, 6	nQ1, Q1	Output		Differential output pair. LVDS interface levels.
7, 8	nQ0, Q0	Output		Differential output pair. LVDS interface levels.
9	PLL_BYPASS	Input	Pullup	Selects between the PLL and crystal inputs as the input to the dividers. When LOW, selects PLL. When HIGH, selects XTAL_IN, XTAL_OUT. LVCMOS / LVTTL interface levels.
10	V_{DDA}	Power		Analog supply pin.
11	V_{DD}	Power		Core supply pin.
12	FB_SEL	Input	Pulldown	Feedback frequency select pin. LVCMOS/LVTTL interface levels.
13, 14	XTAL_IN, XTAL_OUT	Input		Crystal oscillator interface. XTAL_IN is the input. XTAL_OUT is the output.
15, 18	N_SEL0 N_SEL1	Input	Pullup	Output frequency select pin. LVCMOS/LVTTL interface levels.
16, 17	GND			Power supply ground.
19, 20	nQ5, Q5	Output		Differential output pair. LVDS interface levels.
21, 22	nQ4, Q4	Output		Differential output pair. LVDS interface levels.
23, 24	nQ3, Q3	Output		Differential output pair. LVDS interface levels.

NOTE: *Pullup* and *Pulldown* refer to internal input resistors. See Table 2, Pin Characteristics, for typical values.

TABLE 2. PIN CHARACTERISTICS

Symbol	Parameter	Test Conditions	Minimum	Typical	Maximum	Units
C_{IN}	Input Capacitance			4		pF
R_{PULLUP}	Input Pullup Resistor			51		kΩ
$R_{PULLDOWN}$	Input Pulldown Resistor			51		kΩ

Crystal Function Table

Inputs				Function			
XTAL (MHz)	FB_SEL	N_SEL1	N_SEL0	M	VCO (MHz)	N	Output (MHz)
25	0	0	0	20	500	2	250
25	0	0	1	20	500	4	125
25	0	1	0	20	500	5	100
25	0	1	1	20	500	8	62.5
25	1	0	0	24	600	3	200
25	1	0	1	24	600	4	150
25	1	1	0	24	600	6	100
25	1	1	1	24	600	12	50
26.5625	0	1	0	20	531.25	5	106.25
26.5625	1	0	0	24	637.5	3	212.5
26.5625	1	0	1	24	637.5	4	159.375
26.5625	1	1	0	24	637.5	6	106.25
26.5625	1	1	1	24	637.5	12	53.125
30	0	0	0	20	600	2	300
30	0	0	1	20	600	4	150
30	0	1	0	20	600	5	120
30	0	1	1	20	600	8	75
31.25	0	0	0	20	625	2	312.5
31.25	0	0	1	20	625	4	156.25
31.25	0	1	0	20	625	5	125
31.25	0	1	1	20	625	8	78.125
33.3333	0	0	0	20	666.6667	2	333.3333
33.3333	0	0	1	20	666.6667	4	166.6667
33.3333	0	1	0	20	666.6667	5	133.3333
33.3333	0	1	1	20	666.6667	8	83.3333

ABSOLUTE MAXIMUM RATINGS

Supply Voltage, V_{DD}	4.6V
Inputs, V_I	-0.5V to V_{DD} + 0.5V
Outputs, I_O	
Continuous Current	10mA
Surge Current	15mA
Package Thermal Impedance, θ_{JA} 24 Lead TSSOP, EPad	32.1°C/W (0 mps)
Storage Temperature, T_{STG}	-65°C to 150°C

NOTE: Stresses beyond those listed under Absolute Maximum Ratings may cause permanent damage to the device. These ratings are stress specifications only. Functional operation of product at these conditions or any conditions beyond those listed in the *DC Characteristics* or *AC Characteristics* is not implied. Exposure to absolute maximum rating conditions for extended periods may affect product reliability.

TABLE 4A. POWER SUPPLY DC CHARACTERISTICS, $V_{DD} = V_{DDO} = 3.3V±5\%$, T_A = -40°C TO 85°C

Symbol	Parameter	Test Conditions	Minimum	Typical	Maximum	Units
V_{DD}	Core Supply Voltage		3.135	3.3	3.465	V
V_{DDA}	Analog Supply Voltage		V_{DD} – 0.06	3.3	V_{DD}	V
V_{DDO}	Output Supply Voltage		3.135	3.3	3.465	V
I_{DD}	Power Supply Current			120		mA
I_{DDA}	Analog Supply Current			6		mA
I_{DDO}	Output Supply Current			135		mA

TABLE 4B. POWER SUPPLY DC CHARACTERISTICS, $V_{DD} = 3.3V±5\%$, $V_{DDO} = 2.5V±5\%$, T_A = -40°C TO 85°C

Symbol	Parameter	Test Conditions	Minimum	Typical	Maximum	Units
V_{DD}	Core Supply Voltage		3.135	3.3	3.465	V
V_{DDA}	Analog Supply Voltage		V_{DD} – 0.06	3.3	V_{DD}	V
V_{DDO}	Output Supply Voltage		2.375	2.5	2.625	V
I_{DD}	Power Supply Current			120		mA
I_{DDA}	Analog Supply Current			6		mA
I_{DDO}	Output Supply Current			120		mA

TABLE 4C. LVCMOS / LVTTL DC CHARACTERISTICS, $V_{DD} = 3.3V±5\%$, $V_{DDO} = 3.3V±5\%$ OR 2.5V±5%, T_A = -40°C TO 85°C

Symbol	Parameter		Test Conditions	Minimum	Typical	Maximum	Units
V_{IH}	Input High Voltage			2		V_{DD} + 0.3	V
V_{IL}	Input Low Voltage			-0.3		0.8	V
I_{IH}	Input High Current	FB_SEL	$V_{DD} = V_{IN} = 3.465V$			150	µA
		PLL_BYPASS, N_SEL0, N_SEL1	$V_{DD} = V_{IN} = 3.465V$			5	µA
I_{IL}	Input Low Current	FB_SEL	$V_{DD} = 3.465V$, $V_{IN} = 0V$	-5			µA
		PLL_BYPASS, N_SEL0, N_SEL1	$V_{DD} = 3.465V$, $V_{IN} = 0V$	-150			µA

TABLE 4D. LVDS DC CHARACTERISTICS, V_{DD} = V_{DDO} = 3.3V±5% T_A = -40°C TO 85°C

Symbol	Parameter	Test Conditions	Minimum	Typical	Maximum	Units
V_{OD}	Differential Output Voltage			387		mV
ΔV_{OD}	V_{OD} Magnitude Change			40		mV
V_{OS}	Offset Voltage			1.29		V
ΔV_{OS}	V_{OS} Magnitude Change			50		mV

NOTE: Please refer to Parameter Measurement Information for output information.

TABLE 4E. LVDS DC CHARACTERISTICS, V_{DD} = 3.3V±5%, V_{DDO} = 2.5V±5%, T_A = -40°C TO 85°C

Symbol	Parameter	Test Conditions	Minimum	Typical	Maximum	Units
V_{OD}	Differential Output Voltage			379		mV
ΔV_{OD}	V_{OD} Magnitude Change			40		mV
V_{OS}	Offset Voltage			1.24		V
ΔV_{OS}	V_{OS} Magnitude Change			50		mV

TABLE 5. CRYSTAL CHARACTERISTICS

Parameter	Test Conditions	Minimum	Typical	Maximum	Units
Mode of Oscillation		Fundamental			
Frequency		25		33.333	MHz
Equivalent Series Resistance (ESR)				50	Ω
Shunt Capacitance				7	pF
Drive Level				1	mW

NOTE: Characterized using an 18pf parallel resonant crystal.

TABLE 6A. AC CHARACTERISTICS, V_{DD} = V_{DDO} = 3.3V±5%, T_A = -40°C TO 85°C

Symbol	Parameter	Test Conditions	Minimum	Typical	Maximum	Units
F_{OUT}	Output Frequency		53.125		333.33	MHz
*t*jit(Ø)	RMS Phase Jitter (Random)	125MHz, Integration Range: 1.875MHz - 20MHz		0.39		ps
*t*sk(o)	Output Skew; NOTE 1, 2			TBD		ps
t_R / t_F	Output Rise/Fall Time	20% to 80%		355		ps
odc	Output Duty Cycle			50		%
t_{LOCK}	PLL Lock Time				1	ms

See Parameter Measurement Information section.
NOTE 1: Defined as skew between outputs at the same supply voltage and with equal load conditions. Measured at the output differential crossing points.
NOTE 2: This parameter is defined in accordance with JEDEC Standard 65.

TABLE 6B. AC CHARACTERISTICS, V_{DD} = 3.3V±5%, V_{DDO} = 2.5V±5%, T_A = -40°C TO 85°C

Symbol	Parameter	Test Conditions	Minimum	Typical	Maximum	Units
F_{OUT}	Output Frequency		53.125		333.33	MHz
*t*jit(Ø)	RMS Phase Jitter (Random)	125MHz, Integration Range: 1.875MHz - 20MHz		0.38		ps
*t*sk(o)	Output Skew; NOTE 1, 2			TBD		ps
t_R / t_F	Output Rise/Fall Time	20% to 80%		380		ps
odc	Output Duty Cycle			50		%
t_{LOCK}	PLL Lock Time				1	ms

See Parameter Measurement Information section.
NOTE 1: Defined as skew between outputs at the same supply voltage and with equal load conditions. Measured at the output differential crossing points.
NOTE 2: This parameter is defined in accordance with JEDEC Standard 65.

TYPICAL PHASE NOISE AT 125MHZ @ 3.3V

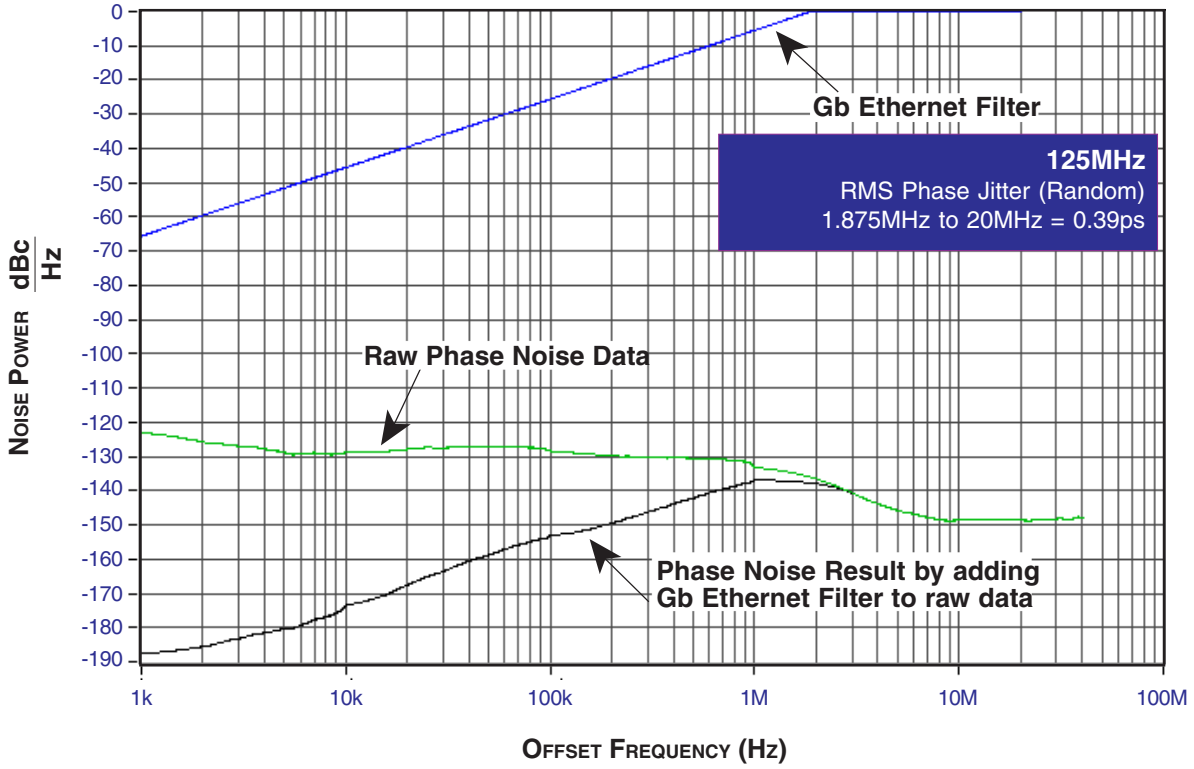

PARAMETER MEASUREMENT INFORMATION

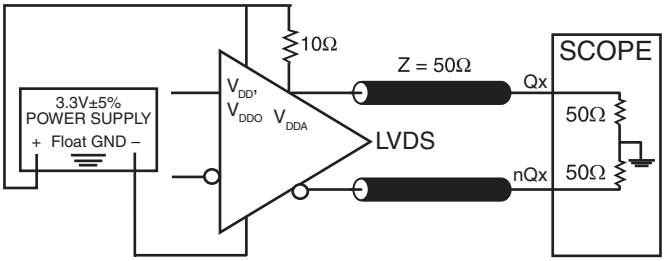

3.3V OUTPUT LOAD AC TEST CIRCUIT

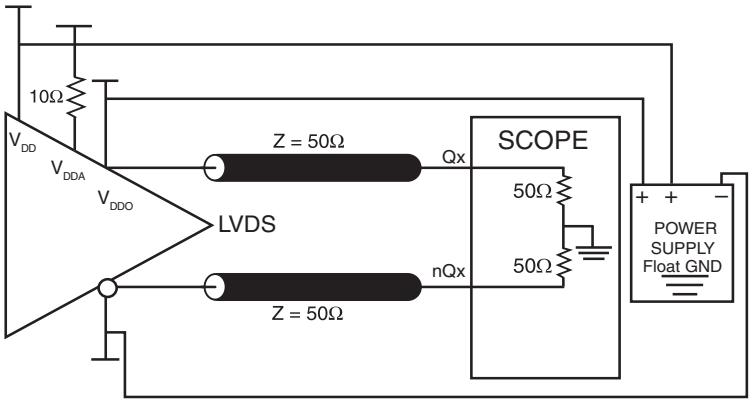

3.3V/2.5V OUTPUT LOAD AC TEST CIRCUIT

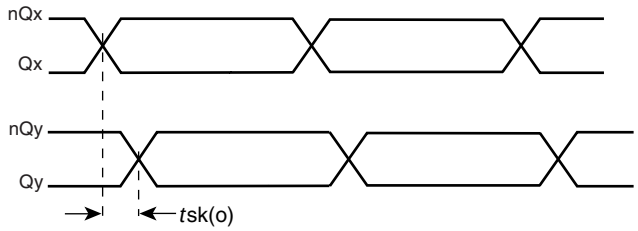

OUTPUT SKEW

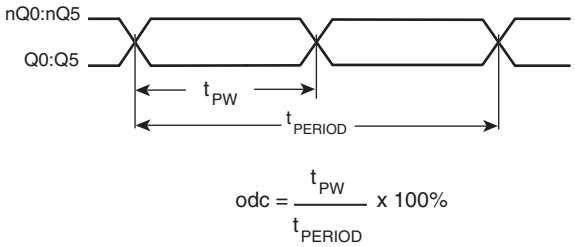

OUTPUT DUTY CYCLE/PULSE WIDTH/PERIOD

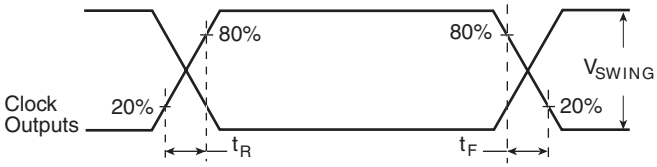

OUTPUT RISE/FALL TIME

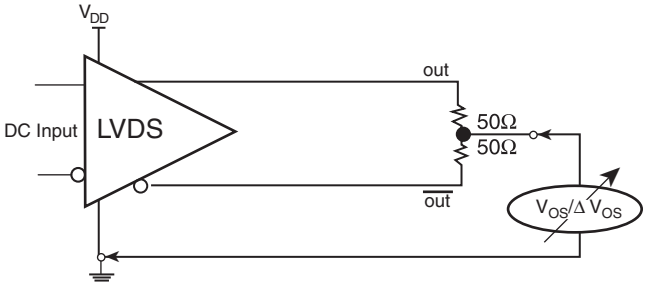

OFFSET VOLTAGE SETUP

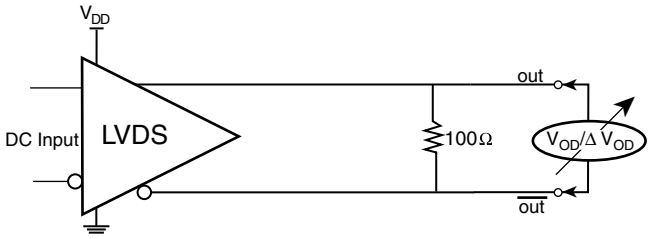

DIFFERENTIAL OUTPUT VOLTAGE SETUP

Reference Document: JEDEC Publication 95, MO-153

APPLICATION INFORMATION

POWER SUPPLY FILTERING TECHNIQUES

As in any high speed analog circuitry, the power supply pins are vulnerable to random noise. To achieve optimum jitter performance, power supply isolation is required. The ICS844246I provides separate power supplies to isolate any high switching noise from the outputs to the internal PLL. V_{DD}, V_{DDA}, and V_{DDO} should be individually connected to the power supply plane through vias, and 0.01µF bypass capacitors should be used for each pin. *Figure 1* illustrates this for a generic V_{CC} pin and also shows that V_{DDA} requires that an additional10Ω resistor along with a 10µF bypass capacitor be connected to the V_{DDA} pin.

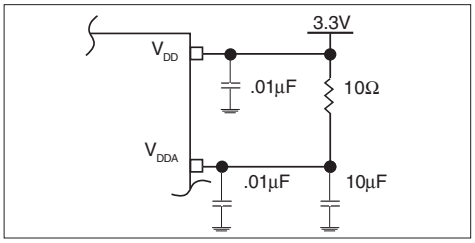

FIGURE 1. POWER SUPPLY FILTERING

RECOMMENDATIONS FOR UNUSED INPUT AND OUTPUT PINS

INPUTS:

LVCMOS CONTROL PINS

All control pins have internal pull-ups or pull-downs; additional resistance is not required but can be added for additional protection. A 1kΩ resistor can be used.

OUTPUTS:

LVDS Outputs

All unused LVDS output pairs can be either left floating or terminated with 100Ω across. If they are left floating, we recommend that there is no trace attached.

CRYSTAL INPUT INTERFACE

The ICS844246 has been characterized with 18pF parallel resonant crystals. The capacitor values shown in *Figure 2* below were determined using an 18pF parallel resonant crystal and were chosen to minimize the ppm error.

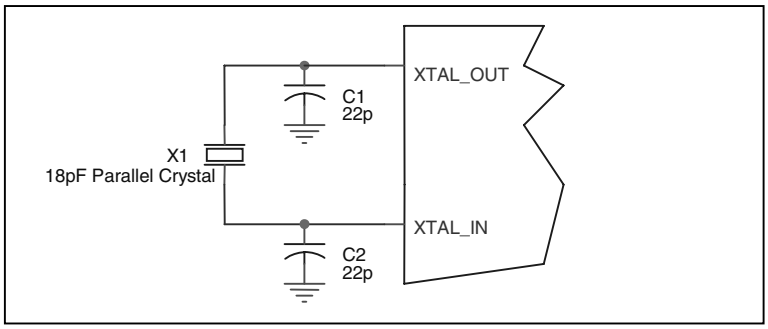

FIGURE 2. CRYSTAL INPUT INTERFACE

LVCMOS TO XTAL INTERFACE

The XTAL_IN input can accept a single-ended LVCMOS signal through an AC couple capacitor. A general interface diagram is shown in *Figure 3.* The XTAL_OUT pin can be left floating. The input edge rate can be as slow as 10ns. For LVCMOS inputs, it is recommended that the amplitude be reduced from full swing to half swing in order to prevent signal interference with the power rail and to reduce noise. This configuration requires that the output impedance of the driver (Ro) plus the series resistance (Rs) equals the transmission line impedance. In addition, matched termination at the crystal input will attenuate the signal in half. This can be done in one of two ways. First, R1 and R2 in parallel should equal the transmission line impedance. For most 50Ω applications, R1 and R2 can be 100Ω. This can also be accomplished by removing R1 and making R2 50Ω.

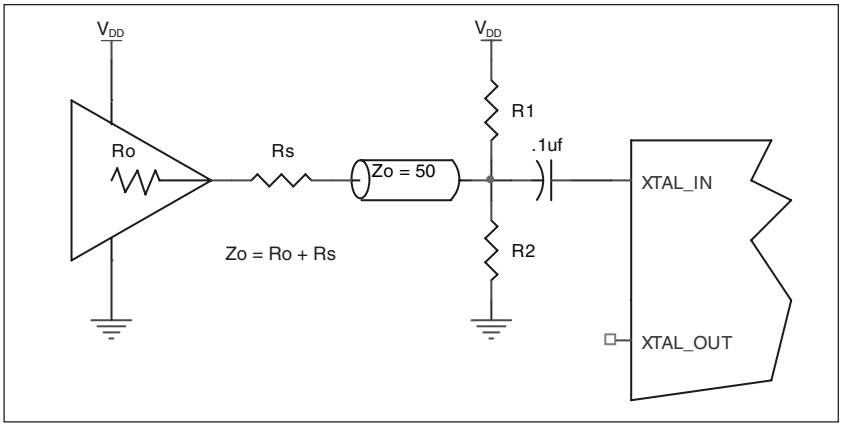

FIGURE 3. GENERAL DIAGRAM FOR LVCMOS DRIVER TO XTAL INPUT INTERFACE

3.3V, 2.5V LVDS DRIVER TERMINATION

A general LVDS interface is shown in *Figure 4.* In a 100Ω differential transmission line environment, LVDS drivers require a matched load termination of 100Ω across near the receiver input.

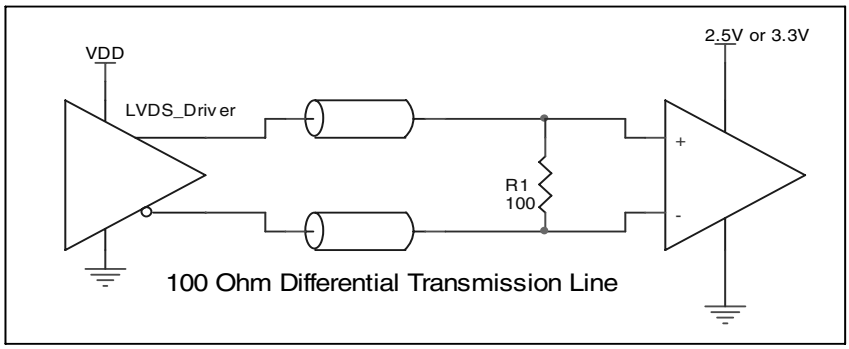

FIGURE 4. TYPICAL LVDS DRIVER TERMINATION

Reference Document: JEDEC Publication 95, MO-153

EPAD THERMAL RELEASE PATH

In order to maximize both the removal of heat from the package and the electrical performance, a land pattern must be incorporated on the Printed Circuit Board (PCB) within the footprint of the package corresponding to the exposed metal pad or exposed heat slug on the package, as shown in *Figure 5.* The solderable area on the PCB, as defined by the solder mask, should be at least the same size/shape as the exposed pad/slug area on the package to maximize the thermal/electrical performance. Sufficient clearance should be designed on the PCB between the outer edges of the land pattern and the inner edges of pad pattern for the leads to avoid any shorts.

While the land pattern on the PCB provides a means of heat transfer and electrical grounding from the package to the board through a solder joint, thermal vias are necessary to effectively conduct from the surface of the PCB to the ground plane(s). The land pattern must be connected to ground through these vias. The vias act as “heat pipes”. The number of vias (i.e. “heat pipes”) are application specific and dependent upon the package power dissipation as well as electrical conductivity requirements. Thus, thermal and electrical analysis and/or testing are recommended to determine the minimum number needed. Maximum thermal and electrical performance is achieved when an array of vias is incorporated in the land pattern. It is recommended to use as many vias connected to ground as possible. It is also recommended that the via diameter should be 12 to 13mils (0.30 to 0.33mm) with 1oz copper via barrel plating. This is desirable to avoid any solder wicking inside the via during the soldering process which may result in voids in solder between the exposed pad/slug and the thermal land. Precautions should be taken to eliminate any solder voids between the exposed heat slug and the land pattern. Note: These recommendations are to be used as a guideline only. For further information, refer to the Application Note on the *Surface Mount Assembly* of Amkor’s Thermally/Electrically Enhance Leadfame Base Package, Amkor Technology.

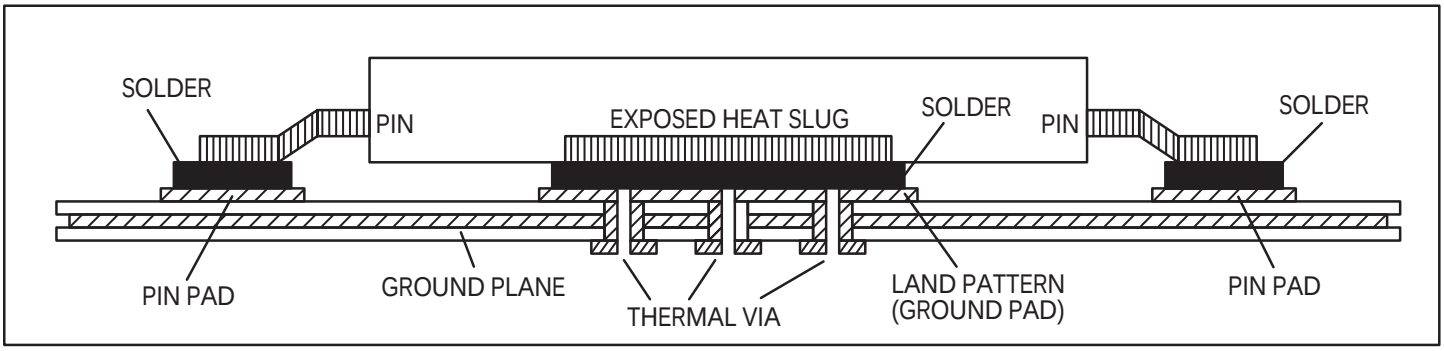

FIGURE 5. ASSEMBLY FOR EXPOSED PAD THERMAL RELEASE PATH –SIDE VIEW (DRAWING NOT TO SCALE)

POWER CONSIDERATIONS

This section provides information on power dissipation and junction temperature for the ICS844246I.
Equations and example calculations are also provided.

1. Power Dissipation.
The total power dissipation for the ICS844246I is the sum of the core power plus the power dissipated in the load(s).
The following is the power dissipation for V_{DD} = 3.3V + 5% = 3.465V, which gives worst case results.

- Power $(core)_{MAX} = V_{DD_MAX} * (I_{DD_MAX} + I_{DDA_MAX})$ = 3.465V * (120mA + 6mA) = **436.59mW**
- Power $(outputs)_{MAX} = V_{DDO_MAX} * I_{DDO_MAX}$ = 3.465V * 135mA = **467.78mW**

Total Power$_{_MAX}$ = 436.59mW + 467.78mW = **904.37mW**

2. Junction Temperature.
Junction temperature, Tj, is the temperature at the junction of the bond wire and bond pad and directly affects the reliability of the device. The maximum recommended junction temperature for HiPerClockS™ devices is 125°C.

The equation for Tj is as follows: $Tj = \theta_{JA} * Pd_total + T_A$

Tj = Junction Temperature

θ_{JA} = Junction-to-Ambient Thermal Resistance

Pd_total = Total Device Power Dissipation (example calculation is in section 1 above)

T_A = Ambient Temperature

In order to calculate junction temperature, the appropriate junction-to-ambient thermal resistance θ_{JA} must be used. Assuming no air flow and a multi-layer board, the appropriate value is 32.1°C/W per Table 7 below.

Therefore, Tj for an ambient temperature of 85°C with all outputs switching is:
85°C + 0.904W * 32.1°C/W = 114°C. This is below the limit of 125°C.

This calculation is only an example. Tj will obviously vary depending on the number of loaded outputs, supply voltage, air flow, and the type of board (single layer or multi-layer).

TABLE 7. THERMAL RESISTANCE θ_{JA} FOR 24-LEAD TSSOP, E-PAD, FORCED CONVECTION

θ_{JA} by Velocity (Meters per Second)			
	0	**1**	**2.5**
Multi-Layer PCB, JEDEC Standard Test Boards	32.1°C/W	25.5°C/W	24.0°C/W

RELIABILITY INFORMATION

TABLE 8. θ_{JA} VS. AIR FLOW TABLE FOR 24 LEAD TSSOP, E-PAD

θ_{JA} by Velocity (Meters per Second)			
	0	**1**	**2.5**
Multi-Layer PCB, JEDEC Standard Test Boards	32.1°C/W	25.5°C/W	24.0°C/W

TRANSISTOR COUNT

The transistor count for ICS844246I is: 3887

PACKAGE OUTLINE - G SUFFIX FOR 24 LEAD TSSOP, E-PAD

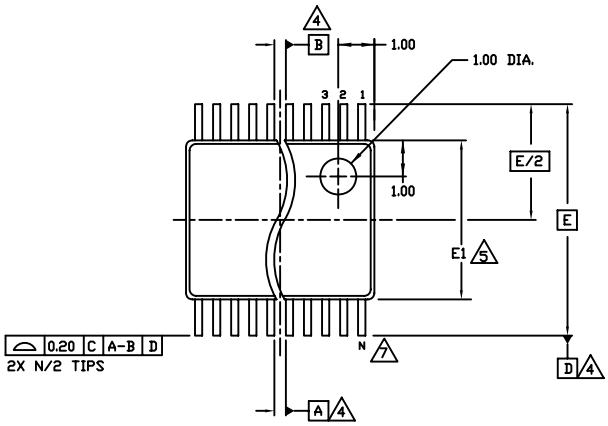

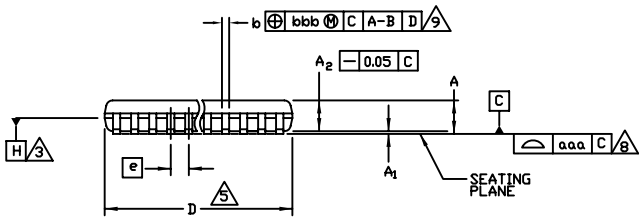

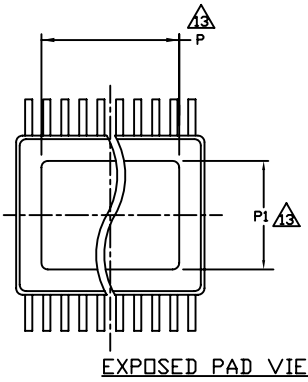

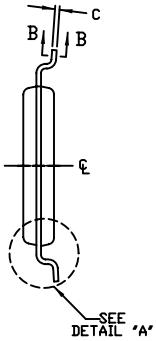

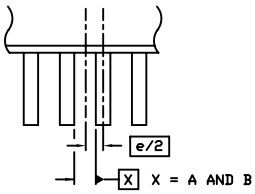

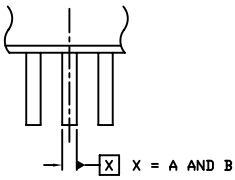

SIDE VIEW

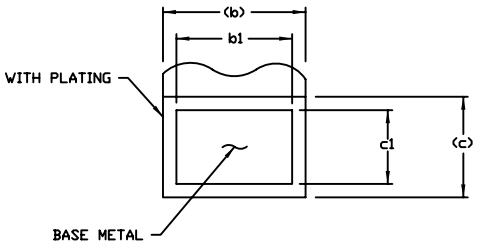

SECTION "B-B"
SCALE: 120/1
(SEE NOTE 10)

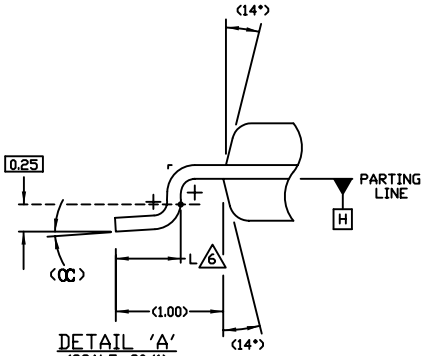

DETAIL 'A'
(SCALE: 30/1)
(VIEW ROTATED 90° C.W.)

TABLE 9. PACKAGE DIMENSIONS

SYMBOL	Millimeters		
	Minimum	Nominal	Maximum
N		24	
A	--		1.10
A1	0.05		0.15
A2	0.85	0.90	0.95
b	0.19		0.30
b1	0.19	0.22	0.25
c	0.09		0.20
c1	0.09	0.127	0.16
D	7.70	7.80	7.90
E		6.40 BASIC	
E1	4.30	4.40	4.50
e		0.65 BASIC	
L	0.50	0.60	0.70
P			5.0
P1			3.2
α	0°		8°
aaa		0.076	
bbb		0.10	

Reference Document: JEDEC Publication 95, MO-153

TABLE 10. ORDERING INFORMATION

Part/Order Number	Marking	Package	Shipping Packaging	Temperature
ICS844246BGI	ICS844246BGI	24 Lead TSSOP, E-Pad	tube	-40°C to 85°C
ICS844246BGIT	ICS844246BGI	24 Lead TSSOP, E-Pad	2500 tape & reel	-40°C to 85°C
ICS844246BGILF	ICS844246BGIL	24 Lead "Lead-Free" TSSOP, E-Pad	tube	-40°C to 85°C
ICS844246BGILFT	ICS844246BGIL	24 Lead "Lead-Free" TSSOP, E-Pad	2500 tape & reel	-40°C to 85°C

NOTE: Parts that are ordered with an "LF" suffix to the part number are the Pb-Free configuration and are RoHS compliant.

While the information presented herein has been checked for both accuracy and reliability, Integrated Device Technology, Incorporated (IDT) assumes no responsibility for either its use or for infringement of any patents or other rights of third parties, which would result from its use. No other circuits, patents, or licenses are implied. This product is intended for use in normal commercial and industrial applications. Any other applications such as those requiring high reliability or other extraordinary environmental requirements are not recommended without additional processing by IDT. IDT reserves the right to change any circuitry or specifications without notice. IDT does not authorize or warrant any IDT product for use in life support devices or critical medical instruments.

Innovate with IDT and accelerate your future networks. Contact:

www.IDT.com

For Sales
800-345-7015
408-284-8200
Fax: 408-284-2775

For Tech Support
netcom@idt.com
480-763-2056

Corporate Headquarters
Integrated Device Technology, Inc.
6024 Silver Creek Valley Road
San Jose, CA 95138
United States
800 345 7015
+408 284 8200 (outside U.S.)

Asia Pacific and Japan
Integrated Device Technology
Singapore (1997) Pte. Ltd.
Reg. No. 199707558G
435 Orchard Road
#20-03 Wisma Atria
Singapore 238877
+65 6 887 5505

Europe
IDT Europe, Limited
321 Kingston Road
Leatherhead, Surrey
KT22 7TU
England
+44 (0) 1372 363 339
Fax: +44 (0) 1372 378851

www.IDT.com

© 2007 Integrated Device Technology, Inc. All rights reserved. Product specifications subject to change without notice. IDT, the IDT logo, ICS and HiPerClockS are trademarks of Integrated Device Technology, Inc. Accelerated Thinking is a service mark of Integrated Device Technology, Inc. All other brands, product names and marks are or may be trademarks or registered trademarks used to identify products or services of their respective owners.
Printed in USA