1.2 A 15 V H-Bridge Motor Driver IC

17510

H-BRIDGE MOTOR DRIVER

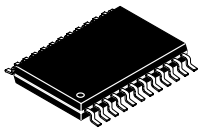

MTB SUFFIX
EJ SUFFIX (Pb-FREE)
98ASH70455A
24-LEAD TSSOP

The 17510 is a monolithic H-Bridge designed to be used in portable electronic applications such as digital and SLR cameras to control small DC motors.

The 17510 can operate efficiently with supply voltages as low as 2.0 V to as high as 15 V. Its low $R_{DS(ON)}$ H-Bridge output MOSFETs (0.45 Ω typical) can provide continuous motor drive currents of 1.2 A and handle peak currents up to 3.8 A. It is easily interfaced to low-cost MCUs via parallel 5.0 V compatible logic. The device can be pulse width modulated (PWM-ed) at up to 200 kHz.

This device contains an integrated charge pump and level shifter (for gate drive voltages), integrated shoot-through current protection (cross-conduction suppression logic and timing), and undervoltage detection and shutdown circuitry.

The 17510 has four operating modes: Forward, Reverse, Brake, and Tri-Stated (High Impedance).

ORDERING INFORMATION

Device	Temperature Range (T_A)	Package
MPC17510EJ/R2	-30°C to 65°C	24 TSSOPW
MPC17510MTB		
MPC17510MTBEL		

Features

- 2.0 V to 15 V Continuous Operation
- Output Current 1.2 A (DC), 3.8 A (Peak)
- 450 mΩ $R_{DS(ON)}$ H-Bridge MOSFETs
- 5.0 V TTL-/CMOS-Compatible Inputs
- PWM Frequencies up to 200 kHz
- Undervoltage Shutdown
- Cross-Conduction Suppression
- Pb-Free Packaging Designated by Suffix Code EJ

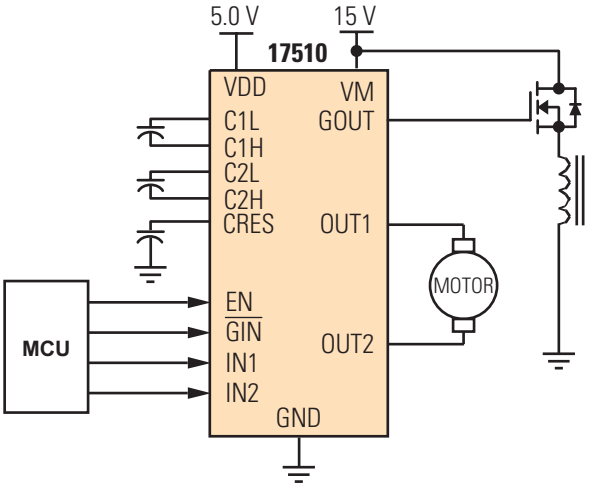

Figure 1. 17510 Simplified Application Diagram

* This document contains certain information on a new product.
Specifications and information herein are subject to change without notice.

INTERNAL BLOCK DIAGRAM

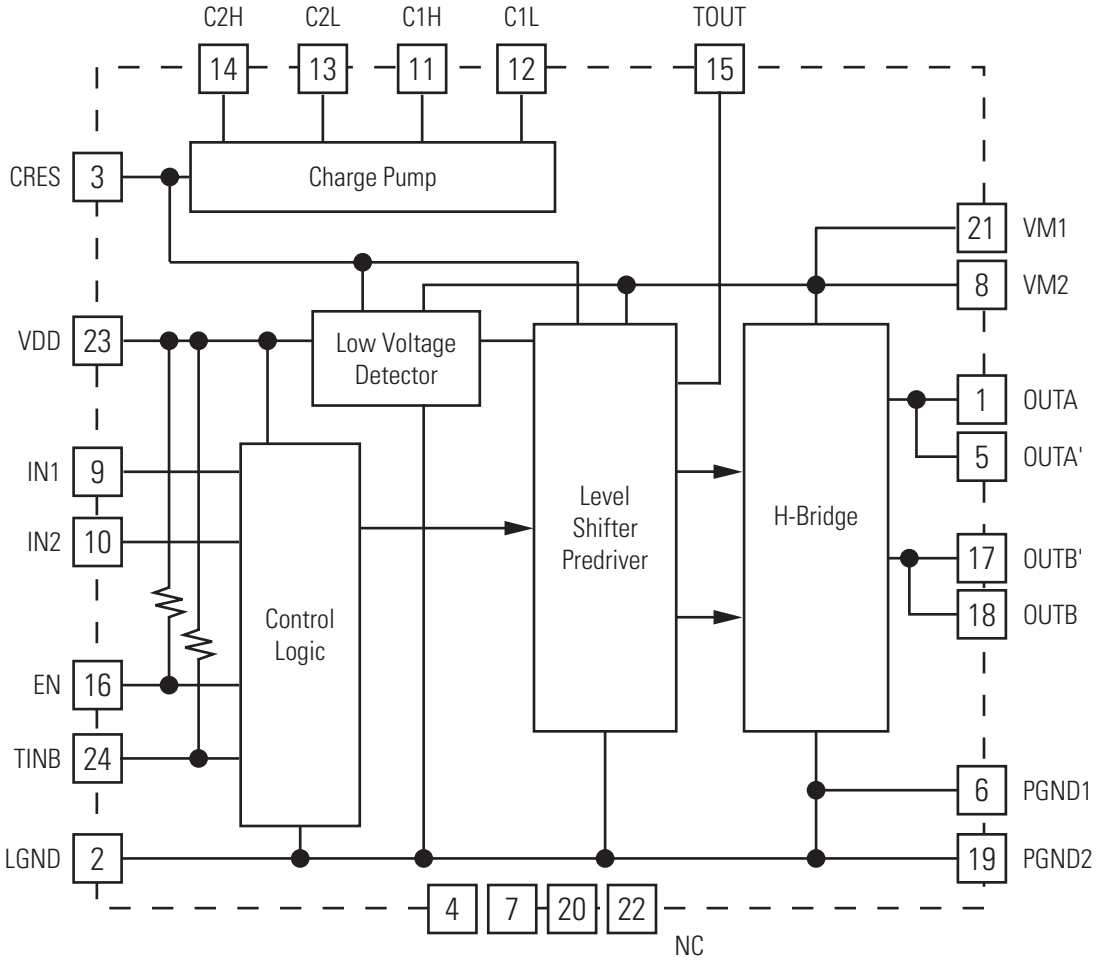

Figure 2. 17510 Simplified Internal Block Diagram

PIN CONNECTIONS

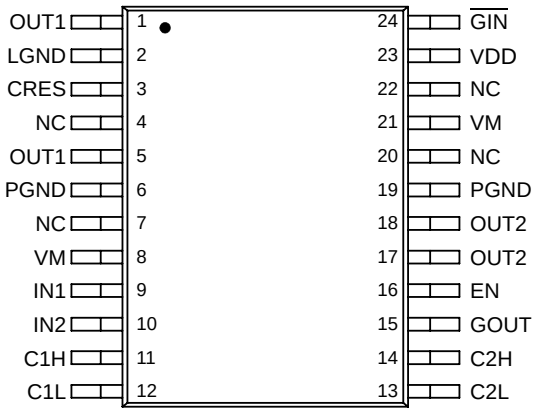

Figure 3. 17510 Pin Connections

Table 1. 17510 Pin Definitions

A functional description of each pin can be found in the Functional Pin Description section beginning on page 8.

Pin Number	Pin Name	Formal Name	Definition
1, 5	OUT1	Output 1	Driver output 1 pins.
2	LGND	Logic Ground	Logic ground.
3	CRES	Charge Pump Output Capacitor Connection	Charge pump reservoir capacitor pin.
4, 7, 20, 22	NC	No Connect	No connection to these pins.
17, 18	OUT2	Output 2	Driver output 2 pins.
6, 19	PGND	Power Ground	Power ground.
8, 21	VM	Motor Drive Power Supply	Motor power supply voltage input pins.
9	IN1	Input Control 1	Control signal input 1 pin.
10	IN2	Input Control 2	Control signal input 2 pin.
11	C1H	Charge Pump 1H	Charge pump bucket capacitor 1 (positive pole).
12	C1L	Charge Pump 1L	Charge pump bucket capacitor 1 (negative pole).
13	C2L	Charge Pump 2L	Charge pump bucket capacitor 2 (negative pole).
14	C2H	Charge Pump 2H	Charge pump bucket capacitor 2 (positive pole).
15	GOUT	Gate Driver Output	Output gate driver signal to external MOSFET switch.
16	$\overline{EN}$	Enable Control	Enable control signal input pin.
23	VDD	Logic Supply	Control circuit power supply pin.
24	GIN	Gate Driver Input	LOW = True control signal for GOUT pin.

ELECTRICAL CHARACTERISTICS

MAXIMUM RATINGS

Table 2. Maximum Ratings

All voltages are with respect to ground unless otherwise noted. Exceeding these ratings may cause a malfunction or permanent damage to the device.

Ratings	Symbol	Value	Unit
Motor Supply Voltage	V_M	-0.5 – -16	V
Charge Pump Output Voltage [1]	VCRES	-0.5 to 13	V
Logic Supply Voltage	V_{DD}	-0.5 to 16	V
Signal Input Voltage (EN, IN1, IN2, $\overline{GIN}$)	V_{IN}	-0.5 to V_{DD}+0.5	V
Driver Output Current			A
Continuous	I_O	1.2	
Peak [2]	I_{OPK}	3.8	
ESD Voltage [3]			V
Human Body Model	V_{ESD1}	±1900	
Machine Model	V_{ESD2}	±130	
Storage Temperature	T_{STG}	-65 to 150	°C
Operating Junction Temperature	T_J	-30 to 150	°C
Operating Ambient Temperature	T_A	-30 to 65	°C
Power Dissipation [4]	P_D	1.0	W
Thermal Resistance	$R\theta_{JA}$	120	°C/W
Soldering Temperature [5]	T_{SOLDER}	260	°C

Notes

1. When supplied externally, connect via 3.0 kΩ resistor.
2. T_A = 25°C, 10 ms pulse at 200 ms interval.
3. ESD1 testing is performed in accordance with the Human Body Model (C_{ZAP} = 100 pF, R_{ZAP} = 1500 Ω), ESD2 testing is performed in accordance with the Machine Model (C_{ZAP} = 200 pF, R_{ZAP} = 0 Ω).
4. T_A = 25°C, $R_{\theta JA}$ = 120°C/W, 37 mm x 50 mm Cu area (1.6 mm FR-4 PCB).
5. Soldering temperature limit is for 10 seconds maximum duration. Not designed for immersion soldering. Exceeding these limits may cause malfunction or permanent damage to the device.

STATIC ELECTRICAL CHARACTERISTICS

Table 3. Static Electrical Characteristics

Characteristics noted under conditions T_A = 25°C, V_M = 15 V, V_{DD} = 5.0 V, GND = 0 V unless otherwise noted. Typical values noted reflect the approximate parameter means at T_A = 25°C under nominal conditions unless otherwise noted.

Characteristic	Symbol	Min	Typ	Max	Unit
POWER					
Motor Supply Voltage	V_M	2.0	–	15	V
Logic Supply Voltage	V_{DD}	4.0	–	5.5	V
Capacitor for Charge Pump	C1, C2, C3	0.001	–	0.1	µF
Standby Power Supply Current [6]					
Motor Supply Standby Current	I_{VMSTBY}	–	–	1.0	µA
Logic Supply Standby Current	$I_{VDDSTBY}$	–	0.3	1.0	mA
Logic Supply Current [7]	I_{VDD}	–	3.3	4.0	mA
Low-Voltage Detection Circuit					V
Detection Voltage (V_{DD}) [8]	$V_{DD}DET$	1.5	2.5	3.5	
Detection Voltage (V_M)	V_MDET	4.0	5.0	6.0	
Driver Output ON Resistance [9]	$R_{DS(ON)}$				Ω
V_M = 2.0 V, 8.0 V, 15 V		–	0.45	0.55	
GATE DRIVE					
Gate Drive Voltage [10]	V_{CRES}				V
No Current Load		12	13	13.5	
Gate Drive Ability (Internally Supplied)	$V_{CRESLOAD}$				V
I_{CRES} = -1.0 mA		10	11.2	–	
Gate Drive Output					V
I_{OUT} = -50 µA	$V_{GOUTHIGH}$	V_{CRES}-0.5	V_{CRES}-0.1	V_{CRES}	
I_{IN} = 50 µA	$V_{GOUTLOW}$	LGND	LGND+0.1	LGND+0.5	
CONTROL LOGIC					
Logic Input Voltage (EN, IN1, IN2, $\overline{GIN}$)	V_{IN}	0	–	V_{DD}	V
Logic Input Function (4.0 V < V_{DD} < 5.5 V)					
High-Level Input Voltage	V_{IH}	V_{DD}x0.7	–	–	V
Low-Level Input Voltage	V_{IL}	–	–	V_{DD}x0.3	V
High-Level Input Current	I_{IH}	–	–	1.0	µA
Low-Level Input Current	I_{IL}	-1.0	–	–	µA
EN/$\overline{GIN}$ Pin	I_{IL}	-200	-50	–	µA

Notes

6. Excluding pull-up resistor current, including current of gate-drive circuit.
7. f_{IN} = 100 kHz.
8. Detection voltage is defined as when the output becomes high-impedance after V_{DD} drops below the detection threshold. When the gate voltage V_{CRES} is applied from an external source, V_{CRES} = 7.5 V.
9. I_O = 1.2 A source + sink.
10. Input logic signal not present.

DYNAMIC ELECTRICAL CHARACTERISTICS

Table 4. Dynamic Electrical Characteristics

Characteristics noted under conditions T_A = 25°C, V_M = 15 V, V_{DD} = 5.0 V, GND = 0 V unless otherwise noted. Typical values noted reflect the approximate parameter means at T_A = 25°C under nominal conditions unless otherwise noted.

Characteristic	Symbol	Min	Typ	Max	Unit
INPUT (EN, IN1, IN2, $\overline{GIN}$)					
Pulse Input Frequency	f_{IN}	–	–	200	kHz
Input Pulse Rise Time (11)	t_R	–	–	1.0 (12)	µs
Input Pulse Fall Time (13)	t_F	–	–	1.0 (12)	µs
OUTPUT					
Propagation Delay Time					µs
Turn-ON Time	t_{PZH}	–	0.3	1.0	
Turn-ON Time	t_{PLH}	–	1.2	2.0	
Turn-OFF Time	t_{PHL}	–	0.5	1.0	
GOUT Output Delay Time (14)					µs
Turn-ON Time	t_{TON}	–	–	10	
Turn-OFF Time	t_{TOFF}	–	–	10	
Charge Pump Circuit					
Oscillator Frequency	f_{OSC}	100	200	400	kHz
Rise Time (15)	tV_{CRESON}	–	0.1	1.0	ms
Low-Voltage Detection Time	t_{VDDDET}	–	–	10	ms

Notes
11. Time is defined between 10% and 90%.
12. That is, the input waveform slope must be steeper than this.
13. Time is defined between 90% and 10%.
14. Load is 500 pF.
15. Time to charge C_{RES} to 11 V after application of V_{DD}.

TIMING DIAGRAMS

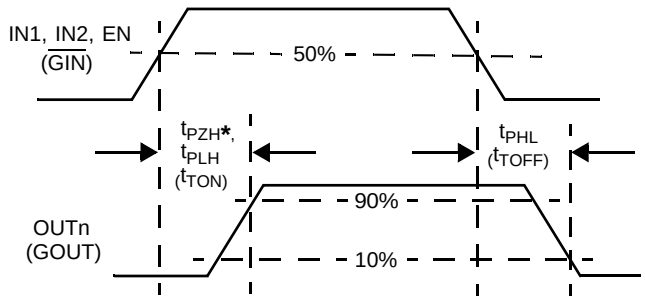

*The last state is "Z".

Figure 4. t_{PLH}, t_{PHL}, and t_{PZH} Timing

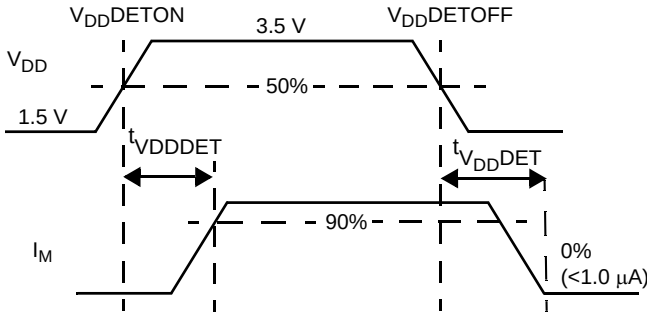

Figure 5. Low-Voltage Detection Timing

Table 5. Truth Table

INPUT				OUTPUT		
EN	**IN1**	**IN2**	**GIN**	**OUT1**	**OUT2**	**GOUT**
H	L	L	X	Z	Z	X
H	H	L	X	H	L	X
H	L	H	X	L	H	X
H	H	H	X	L	L	X
L	X	X	X	L	L	L
H	X	X	L	X	X	H
H	X	X	H	X	X	L

H = High.
L = Low.
Z = High impedance.
X = Don't care.
The $\overline{GIN}$ pin and EN pin are pulled up to V_{DD} with internal resistance.

FUNCTIONAL DESCRIPTION

INTRODUCTION

The 17510 is a monolithic H-Bridge power IC applicable to small DC motors used in portable electronics. The 17510 can operate efficiently with supply voltages as low as 2.0 V to as high as 15 V, and it can provide continuos motor drive currents of 1.2 A while handling peak currents up to 3.8 A. It is easily interfaced to low-cost MCUs via parallel 5.0 V-compatible logic. The device can be pulse width modulated (PWM-ed) at up to 200 kHz. The 17510 has four operating modes: Forward, Reverse, Brake, and Tri-Stated (High Impedance).

Basic protection and operational features (direction, dynamic braking, PWM control of speed and torque, main power supply undervoltage detection and shutdown, logic power supply undervoltage detection and shutdown), in addition to the 1.0 A rms output current capability, make the 17510 a very attractive, cost-effective solution for controlling a broad range of small DC motors. In addition, a pair of 17510 devices can be used to control bipolar stepper motors. The 17510 can also be used to excite transformer primary windings with a switched square wave to produce secondary winding AC currents.

As shown in Figure 2, 17510 Simplified Internal Block Diagram, page 2, the 17510 is a monolithic H-Bridge with built-in charge pump circuitry. For a DC motor to run, the input conditions need to be set as follows: ENable input logic HIGH, one INput logic LOW, and the other INput logic HIGH (to define output polarity). The 17510 can execute dynamic braking by setting both IN1 and IN2 logic HIGH, causing both low-side MOSFETs in the output H-Bridge to turn ON. Dynamic braking can also implemented by taking the ENable logic LOW. The output of the H-Bridge can be set to an open-circuit high-impedance (Z) condition by taking both IN1 and IN2 logic LOW. (refer to Table 5, Truth Table, page 7).

The 17510 outputs are capable of providing a continuous DC load current of up to 1.2 A. An internal charge pump supports PWM frequencies to 200 kHz. The EN pin also controls the charge pump, turning it off when EN = LOW, thus allowing the 17510 to be placed in a power-conserving sleep mode.

FUNCTIONAL PIN DESCRIPTION

OUTPUT 1 AND OUTPUT2 (OUT1, OUT2)

The OUT1 and OUT2 pins provide the connection to the internal power MOSFET H-Bridge of the IC. A typical load connected between these pins would be a small DC motor. These outputs will connect to either VM or PGND, depending on the states of the control inputs (refer to Table 5, Truth Table, page 7).

POWER GROUND AND LOGIC GROUND (PGND, LGND)

The power and logic ground pins (PGND and LGND) should be connected together with a very low-impedance connection.

CHARGE PUMP RESERVOIR CAPACITOR (CRES)

The CRES pin provides the connection for the external reservoir capacitor (output of the charge pump). Alternatively this pin can also be used as an input to supply gate-drive voltage from an external source via a series current-limiting resistor. The voltage at the CRES pin will be approximately three times the V_{DD} voltage, as the internal charge pump utilizes a voltage tripler circuit. The V_{CRES} voltage is used by the IC to supply gate drive for the internal power MOSFET H-Bridge.

MOTOR SUPPLY VOLTAGE INPUT (VM)

The VM pins carry the main supply voltage and current into the power sections of the IC. This supply then becomes controlled and/or modulated by the IC as it delivers the power to the load attached between OUT1 and OUT2. All VM pins must be connected together on the printed circuit board with as short as possible traces offering as low impedance as possible between pins.

VM has an undervoltage threshold. If the supply voltage drops below the undervoltage threshold, the output power stage switches to a tri-state condition. When the supply voltage returns to a level that is above the threshold, the power stage automatically resumes normal operation according to the established condition of the input pins.

CONTROL SIGNAL INPUT AND ENABLE CONTROL SIGNAL INPUT (IN1, IN2, EN)

The IN1, IN2, and EN pins are input control pins used to control the outputs. These pins are 5.0 V CMOS-compatible inputs with hysteresis. The IN1, IN2, and EN work together to control OUT1 and OUT2 (refer to Table 5, Truth Table).

GATE DRIVER INPUT (GIN)

The $\overline{GIN}$ input controls the GOUT pin. When $\overline{GIN}$ is set logic LOW, GOUT supplies a level-shifted high-side gate drive signal to an external MOSFET. When $\overline{GIN}$ is set logic HIGH, GOUT is set to GND potential.

CHARGE PUMP BUCKET CAPACITOR (C1L, C1H, C2L, C2H)

These two pairs of pins, the C1L and C1H and the C2L and C2H, connect to the external bucket capacitors required by the internal charge pump. The typical value for the bucket capacitors is 0.1 μF.

GATE DRIVER OUTPUT (GOUT)

The GOUT output pin provides a level-shifted, high-side gate drive signal to an external MOSFET with C_{ISS} up to 500 pF.

CONTROL CIRCUIT POWER SUPPLY (VDD)

The VDD pin carries the 5.0 V supply voltage and current into the logic sections of the IC. VDD has an undervoltage threshold. If the supply voltage drops below the undervoltage threshold, the output power stage switches to a tri-state condition. When the supply voltage returns to a level that is above the threshold, the power stage automatically resumes normal operation according to the established condition of the input pins.

TYPICAL APPLICATIONS

Figure 6 shows a typical application for the 17510.

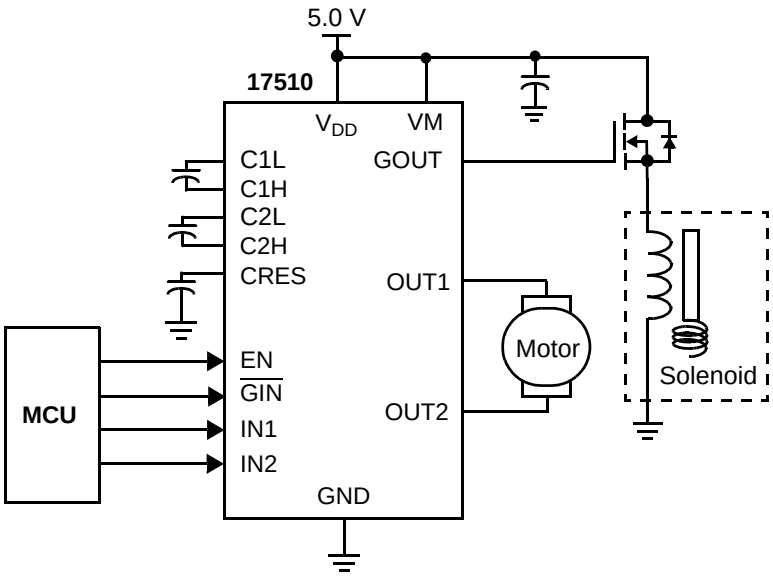

Figure 6. 17510 Typical Application Diagram

CEMF SNUBBING TECHNIQUES

Care must be taken to protect the IC from potentially damaging CEMF spikes induced when commutating currents in inductive loads. Typical practice is to provide snubbing of voltage transients by placing a capacitor or zener at the supply pin (VM) (see Figure 7).

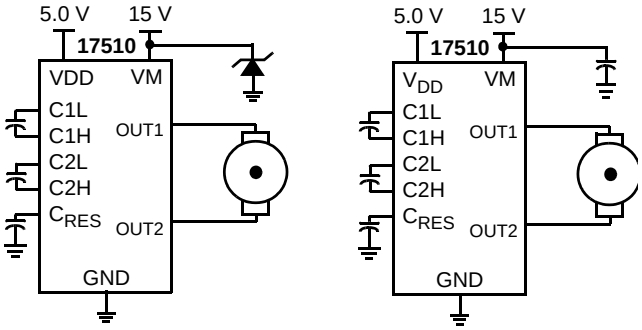

Figure 7. CEMF Snubbing Techniques

PACKAGING

PACKAGE DIMENSIONS

For the most current package revision, visit **www.freescale.com** and perform a keyword search using the “98A” listed below.

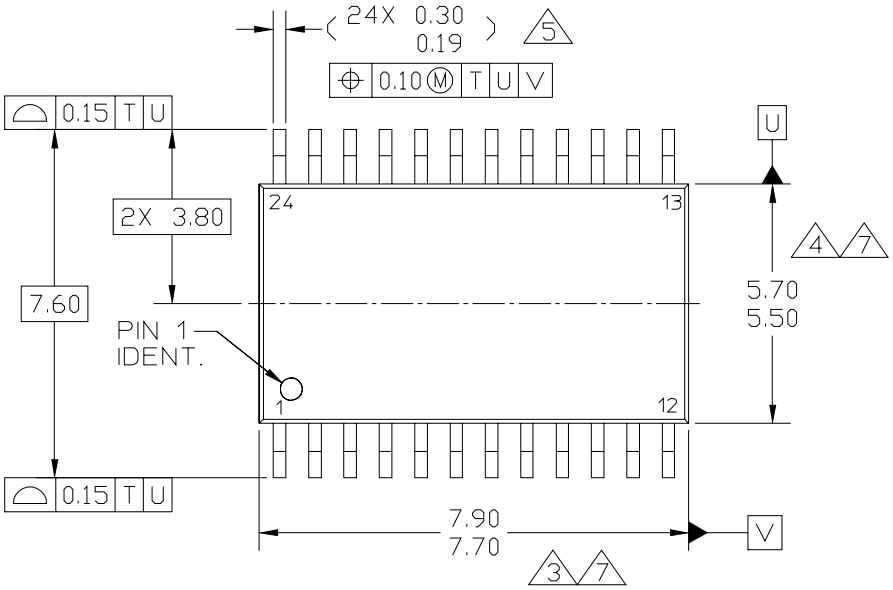

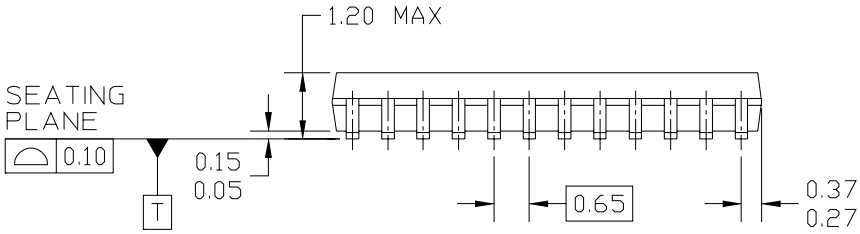

© FREESCALE SEMICONDUCTOR, INC. ALL RIGHTS RESERVED.	MECHANICAL OUTLINE	PRINT VERSION NOT TO SCALE
TITLE: 24 LD TSSOP, WIDE BODY	DOCUMENT NO: 98ASH70455A	REV: B
	CASE NUMBER: 948K-01	25 MAY 2005
	STANDARD: NON-JEDEC	

MTB SUFFIX
EJ SUFFIX (PB-FREE)
24-PIN
PLASTIC PACKAGE
98ASH70455A
ISSUE B

17510

PACKAGE DIMENSIONS (continued)

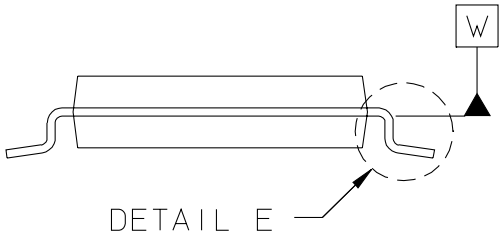

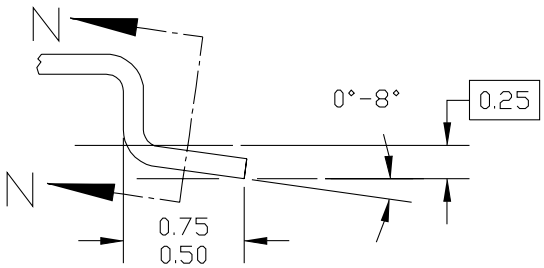

DETAIL E

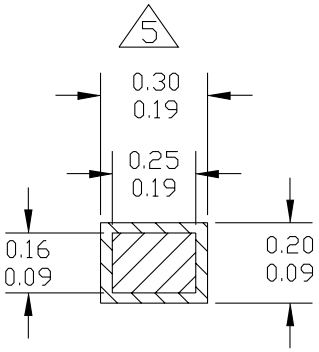

SECTION N-N

© FREESCALE SEMICONDUCTOR, INC. ALL RIGHTS RESERVED.	MECHANICAL OUTLINE	PRINT VERSION NOT TO SCALE
TITLE: 24 LD TSSOP, WIDE BODY	DOCUMENT NO: 98ASH70455A	REV: B
	CASE NUMBER: 948K-01	25 MAY 2005
	STANDARD: NON-JEDEC	

MTB SUFFIX
EJ SUFFIX (PB-FREE)
24-PIN
PLASTIC PACKAGE
98ASH70455A
ISSUE B

17510

REVISION HISTORY

REVISION	DATE	DESCRIPTION OF CHANGES
2.0	7/2006	• Implemented a Revision History page. • Converted to Freescale format, and updated to the prevaiing form and style • Added EJ Pb-FREE package
3.0	1/2007	• Corrected symbol in Table 3, Driver Output ON Resistance from “W” to "Ω"

How to Reach Us:

Home Page:
www.freescale.com

Web Support:
http://www.freescale.com/support

USA/Europe or Locations Not Listed:
Freescale Semiconductor, Inc.
Technical Information Center, EL516
2100 East Elliot Road
Tempe, Arizona 85284
+1-800-521-6274 or +1-480-768-2130
www.freescale.com/support

Europe, Middle East, and Africa:
Freescale Halbleiter Deutschland GmbH
Technical Information Center
Schatzbogen 7
81829 Muenchen, Germany
+44 1296 380 456 (English)
+46 8 52200080 (English)
+49 89 92103 559 (German)
+33 1 69 35 48 48 (French)
www.freescale.com/support

Japan:
Freescale Semiconductor Japan Ltd.
Headquarters
ARCO Tower 15F
1-8-1, Shimo-Meguro, Meguro-ku,
Tokyo 153-0064
Japan
0120 191014 or +81 3 5437 9125
support.japan@freescale.com

Asia/Pacific:
Freescale Semiconductor Hong Kong Ltd.
Technical Information Center
2 Dai King Street
Tai Po Industrial Estate
Tai Po, N.T., Hong Kong
+800 2666 8080
support.asia@freescale.com

For Literature Requests Only:
Freescale Semiconductor Literature Distribution Center
P.O. Box 5405
Denver, Colorado 80217
1-800-441-2447 or 303-675-2140
Fax: 303-675-2150
LDCForFreescaleSemiconductor@hibbertgroup.com

RoHS-compliant and/or Pb-free versions of Freescale products have the functionality and electrical characteristics of their non-RoHS-compliant and/or non-Pb-free counterparts. For further information, see http://www.freescale.com or contact your Freescale sales representative.

For information on Freescale's Environmental Products program, go to http://www.freescale.com/epp.

MPC17510
Rev. 3.0
1/2007