a

28V/100W, Dual Output, DC/DC Converters with Integral EMI Filter

Preliminary Information ADDC27012DA/ADDC27015DA

FEATURES

270Vdc input, ±12Vdc @ 8.33A, 100W output (ADDC27012DA)
270Vdc input, ±15Vdc @ 6.68A, 100W output (ADDC27015DA)
Integral EMI filter designed to meet MIL-STD-461D
Low weight: 80 grams
NAVMAT derated
Many protection and system features

APPLICATIONS

Commercial and Military Airborne Electronics
Missile Electronics
Space-Based Antennae and Vehicles
Mobile/Portable Ground Equipment

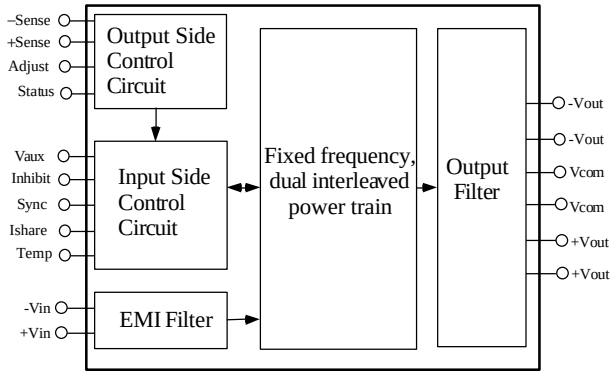

ADDC02812DA/ADDC02815DA FUNCTIONAL BLOCK DIAGRAM

GENERAL DESCRIPTION

The ADDC27012DA and ADDC27015DA hybrid military DC/DC converters with integral EMI filter offer the highest power density of any DC/DC power converters with their features and in their power range available today. The converters with integral EMI filter are a fixed frequency, 1 MHz, square wave switching DC/DC power supply. They are not variable frequency resonant converters. In addition to many protection features, these converters have system level features which allows them to be used as a component in larger systems as well as a stand-alone power supply. The units are designed for high reliability and high performance applications where saving space and/or weight are critical.

The ADDC27012DA and ADDC27015DA are available in a hermetically sealed, molybdenum based hybrid package and are easily heatsink mountable For **MIL-STD-883** devices, contact factory for availability.

PRODUCT HIGHLIGHTS

1) 60W/cubic inch power density with an integral EMI filter designed to meet all applicable requirements in MIL-STD-461D when installed in a typical system setup.
2) Light weight: 80 grams.
3) Operational and survivable over a wide range of input conditions: 160-400Vdc; survives low line and high .
4) High reliability; NAVMAT derated.
5) Protection features include:
   - output overvoltage protection
   - output short circuit current protection
   - thermal monitor/shutdown
   - input overvoltage shutdown
   - input transient protection
6) System level features include:
   - current sharing for parallel operation
   - inhibit control
   - output status signal
   - synchronization for multiple units
   - input referenced auxiliary voltage

One Technology Way; P.O. Box 9106; Norwood, MA 02062-9106
Tel: 617/329-4700 TWX: 710/394-6577
West Coast Central Atlantic
714/641-9391 214/231-5094 215/643-7790

ADDC27012DA/ADDC27015DA SPECIFICATIONS

ABSOLUTE MAXIMUM RATINGS[1]

Inhibit, Input Voltage.....450Vdc, -0.5Vdc
Sync.....8Vdc, -0.5Vdc
Ishare.....6Vdc. -0.5Vdc
Temp.....12Vdc, -0.3Vdc
Common-Mode Voltage, Input to Output.....500Vdc
Lead Soldering Temp (10 sec) .....+300°C
Storage Temperature .....-65°C to +150°C
Maximum Junction Temperature.....+150°C
Maximum Case Operating Temperature..... +125°C

ELECTRICAL CHARACTERISTICS (T_c=25°C, V_{in}=270Vdc unless otherwise noted; full temperature range is -55°C to +90°C; all temperatures are case and T_c is the temperature measured at the center of the package bottom.)

Parameter	Case Temp	Test Level	Conditions	ADDC27012DA Min	ADDC27012DA Typ	ADDC27012DA Max	ADDC27015DA Min	ADDC27015DA Typ	ADDC27015DA Max	Units
INPUT CHARACTERISTICS										
Steady State Operating Input Voltage Range[3] (+12V)	Full	VI	Io=±0.42A to ±4.17A	180	270	350				Volts
Steady State Operating Input Voltage Range[3] (+15V)	Full	VI	Io=±0.34A to ±3.34A				180	270	350	
Abnormal Operating Input Voltage Range (per MIL-STD-704D)[3] (+12V)	Full	VI	Io=±0.42A to ±3.33A	160		400				Volts
Abnormal Operating Input Voltage Range (per MIL-STD-704D)[3] (+15V)	Full	VI	Io=±0.34A to ±3.34A				160		400	Volts
Input Voltage Shutdown (+12V)	+25°C	I		401	419					Vdc
Input Voltage Shutdown (+15V)	+25°C	I					401	419		Vdc
Disabled Input Current (+12V)	+25°C	VI			300					µA
Disabled Input Current (+15V)	+25°C	VI						300		µA
OUTPUT CHARACTERISTICS[4,5,6]										
Regulated Output Voltage (+12V)	+25°C	I	Io=±0.42A to ±4.17A, Vin=180 to 350Vdc	+11.88	+12.00	+12.12				Vdc
	Full	VI	Io=±0.42A to ±4.17A, Vin=180 to 350Vdc	+11.76		+12.24				Vdc
	Full	VI	Io=±0.42A to ±4.17A, Vin=160 to 400Vdc	+11.76		+12.24				Vdc
Regulated Output Voltage (+15V)	+25°C	I	Io=±0.34A to ±3.34A, Vin=180 to 350Vdc				+14.85	+15.00	+15.15	Vdc
	Full	VI	Io=±0.34A to ±3.34A, Vin=180 to 350Vdc				+14.70		+15.30	Vdc
	Full	VI	Io=±0.34A to ±3.34A, Vin=160 to 400Vdc				+14.70		+15.30	Vdc
Non-Regulated Output Voltage (-12V)	+25°C	I	Io=±0.42A to ±4.17A, Vin=180 to 350Vdc	-11.76	-12.00	-12.24				Vdc
	Full	VI	Io=±0.42A to ±4.17A, Vin=180 to 350Vdc	-11.64		-12.36				Vdc
	Full	VI	Io=±0.42A to ±4.17A, Vin=160 to 400Vdc	-11.64		-12.36				Vdc
Non-Regulated Output Voltage (-15V)	+25°C	I	Io=±0.34A to ±3.34A, Vin=180 to 350Vdc				-14.70	-15.00	-15.30	Vdc
	Full	VI	Io=±0.34A to ±3.34A, Vin=180 to 350Vdc				-14.55		-15.45	Vdc
	Full	VI	Io=±0.34A to ±3.34A, Vin=160 to 400Vdc				-14.40		-15.60	Vdc
Line Regulation (+12V)	+25°C	VI	Io=±4.17A, Vin=180 to 350Vdc		1.8	8				mV
Line Regulation (+15V)	+25°C	VI	Io=±3.34A, Vin=180 to 350Vdc					5	10	mV
Load Regulation (+12V)	+25°C	VI	Vin=270Vdc, Io=+0.42A to +4.17A		4	12				mV
Load Regulation (+15V)	+25°C	VI	Vin=270Vdc, Io=+0.34A to +3.34A					6	14	mV
Output Ripple/Noise (each output)[7] (+12V)	+25°C	I	Io=±4.17A, 5 kHz - 10 MHz BW			45				mVp-p
Output Ripple/Noise (each output)[7] (+15V)	+25°C	I	Io=±3.34A, 5 kHz - 10 MHz BW						45	mVp-p
Total Output Current (Io) +12V	Full	VI	Vo=±12Vdc, Vin=180 to 350Vdc	0.833		8.33				A
Total Output Current (Io) +15V	Full	VI	Vo=±15Vdc, Vin=180 to 350Vdc				0.34		3.34	A
Output Overvoltage Protection (+12V)	+25°C	V	Io=±4.17A, open remote sense connection		120					%Vnom
Output Overvoltage Protection (+15V)	+25°C	V	Io=±3.34A, open remote sense connection					118		%Vnom
Output Current Limit (+12V)	+25°C	V	Vo=90%Vout nom		130					%Io max
Output Current Limit (+15V)	+25°C	V	Vo=90%Vout nom					130		%Io max
Output Short Circuit Current	+25°C	I				13			12.5	A
ISOLATION CHARACTERISTICS										
Isolation Voltage	+25°C	I	Input to output or any pin to case at 500Vdc	100			100			MΩ

Parameter	Case Temp	Test Level	Conditions	ADDC02812DA Min	ADDC02812DA Typ	ADDC02812DA Max	ADDC02815DA Min	ADDC02815DA Typ	ADDC02815DA Max	Units
DYNAMIC CHARACTERISTICS[7]										
Output voltage deviation due to step change in load (+12V)	+25°C	I	Io=±2.08A to ±.4.17A or ±4.17A to ±2.08A		.850	1.30				V
Output voltage deviation due to step change in load (+15V)	+25°C	I	Io=±1.67A to ±3.34A or ±3.34A to ±1.67A					.850	1.50	V
Response time due to step change in load (+12V)	+25°C	I	Io=10A to 20A or 20A to 10A, di/dt=0.5A/µS, measured to within 2% of final value		150	225				µS
Response time due to step change in load (+15V)	+25°C	I	Io=±1.67A to ±3.34A or ±3.34A to ±1.67A, di/dt=0.5A/µS, measured to within 2% of final value					150	225	µS
Soft Start Turn-On Time (+12V)	+25°C	I	Io=±.4.17A, from inhibit high to status high		6	15				ms
Soft Start Turn-On Time (+15V)	+25°C	I	Io=±3.34A, from inhibit high to status high					7	20	ms
THERMAL CHARACTERISTICS										
Efficiency (+12V)	+25°C	I	Io=± 2.5A	81	83					%
	Full	VI	Io=±.2.5A	80						%
	+25°C	I	Io=±.4.17A	81	83					%
	Full	VI	Io=±.4.17A	80						%
Efficiency (+15V)	+25°C	I	Io=± 2.0A				81	83		%
	Full	VI	Io=±.2.0A				80			%
	+25°C	I	Io=±.3.34A				81	83		%
	Full	VI	Io=±.3.34A				80			%
Hottest Junction Temperature[8] (+12V)	+90°C	V	Io=±.4.17A		110					°C
Hottest Junction Temperature[8] (+15V)	+90°C	V	Io=±.3.34A					110		°C
CONTROL CHARACTERISTICS										
Clock frequency (+12V)	Full	VI	Io=±0.42A	0.85		1.00				MHz
Clock frequency (+15V)	Full	VI	Io=±0.34A				0.85		1.00	MHz
Adjust (pin 3) Vadj (+12V)	+25°C	I		4.7	4.8	4.9				V
Adjust (pin 3) Vadj (+15V)	+25°C	I					5.9	6.0	6.1	V
Status (pin 4)										
Voh	+25°C	I	Ioh=400µA	2.4	4.0		2.4	4.0		V
Vol	+25°C	I	Iol=1 mA		0.15	0.7		0.15	0.7	V
Vaux (pin 5)										
Vo (nom) (+12V)	+25°C	I	Iaux=5mA, load current==±.4.17A	13.25	13.5	13.75				V
Vaux (pin 5)										
Vo (nom) (+15V)	+25°C	I	Iaux=5mA, load current==±.43.34A				13.65	13.9	14.5	V
Inhibit (pin 6)										
Vil	+25°C	I				0.5			0.5	V
Iil	+25°C	I	Vil=0.5V			1.2			1.2	mA
Vi (open circuit)	+25°C	I				15			15	V
Sync (pin 7)[9]										
Vih	+25°C	I		4.0			4.0			V
Iih	+25°C	I	Vih=7.0V			160			160	µA
Ishare (pin 8) (+12V)	+25°C	I	load current==±.4.17A	2.65	2.75	2.85				V
Ishare (pin 8) (+15V)	+25°C	I	load current==±.3.34A				2.65	2.75	2.85	V
Temp (pin 9)	+25°C	V			3.90			3.90		V

NOTES

[1]Absolute maximum ratings are limiting values, to be applied individually, and beyond which the serviceability of the circuit may be impaired. Functional operability under any of these conditions is not necessarily implied. Exposure of absolute maximum rating conditions for extended periods of time may affect device reliability.
[2]Military subgroups apply only to military qualified devices.
[3]400Vdc upper limit rated for transient condition of up to 50 msec. 160Vdc lower limit rated for continuous operation during emergency condition. Steady state and abnormal input voltage range require source impedance sufficient to insure input stability at low line.
[4]Measured at the remote sense points.
[5]Tests performed at 10W load; unit regulates output voltage to 5W load.
[6]Output characteristics tested with balanced loads on each output. However, unit operates with unbalanced loads up to 90%/10% split.
[7]$C_{load} = 0$.
[8]Refer to section entitled Thermal Characteristics for more information.
[9]Unit has internal pull-down; refer to section entitled Pin 7 (Sync).

EXPLANATION OF TEST LEVELS

Test Level

I - 100% Production Tested.
II - 100% production tested at +25° C, and sample tested at specified temperatures.
III - Sample Tested Only.
IV - Parameter is guaranteed by design and characterization testing.
V - Parameter is a typical value only.
VI - All devices are 100% production tested at +25°C. 100% production tested at temperature extremes for military temperature devices; guaranteed by design and characterization testing for industrial devices

Pin Configuration

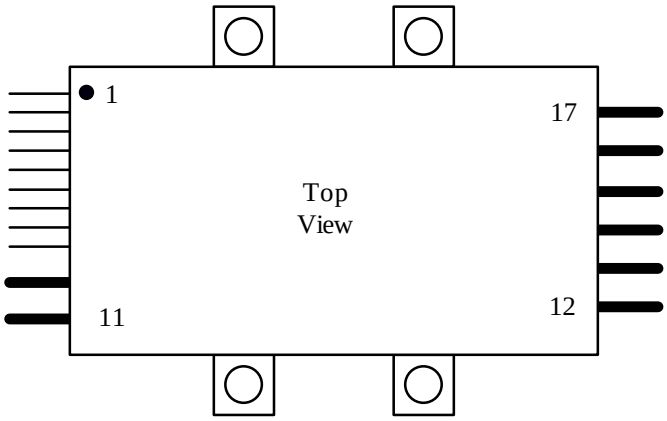

PIN DESCRIPTIONS

Pin No.	Name	Function
1	- SENSE	Feedback loop connection for remote sensing output voltage. Must always be connected for proper operation.
2	+ SENSE	Feedback loop connection for remote sensing output voltage. Must always be connected for proper operation.
3	ADJUST	Adjusts output voltage setpoint.
4	STATUS	Indicates output voltage is within ±5% of nominal. Active high referenced to -SENSE (pin 1).
5	Vaux	Low level dc auxiliary voltage supply referenced to input return (pin 10).
6	INHIBIT	Power supply disable. Active low and referenced to input return (pin 10).
7	SYNC	Clock synchronization input for multiple units; referenced to input return (pin 10).
8	Ishare	Current share pin which allows paralleled units to share current typically within ±5% at full load; referenced to input return (pin 10).
9	TEMP	Case temperature indicator and temperature shutdown override; referenced to input return (pin 10).
10	- Vin	Input return.
11	+ Vin	+270V nominal input bus.
12	+Vout	+12Vdc output (ADDC27012DA), +15Vdc output (ADDC27015DA)
13	+Vout	+12Vdc output (ADDC27012DA), +15Vdc output (ADDC27015DA)
14	Vcommon	Output return.
15	Vcommon	Output return.
16	-Vout	-12Vdc output (ADDC27012DA), -15Vdc output (ADDC27015DA)
17	-Vout	-12Vdc output (ADDC27012DA), -15Vdc output (ADDC27015DA)

Screening Levels for ADDC27012DA/ADDC27015DA

Screening Steps	Industrial (KV)	Ruggedized Industrial (TV)	MIL-STD-883B/SMD (TV/883B)
Pre-cap visual	100%	MIL-STD-883, TM2017	
Temp cycle	N/A	N/A	
Constant acceleration	N/A	N/A	
Fine leak	guaranteed to meet MIL-STD-883, TM1014	guaranteed to meet MIL-STD-883, TM1014	compliant to MIL-PRF-38534
Gross leak	guaranteed to meet MIL-STD-883, TM1014	guaranteed to meet MIL-STD-883, TM1014	
Burn-in	N/A	MIL-STD-883, TM1015, 96 hrs at 115°C case	
Final electrical test	at 25°C, per spec. table	at 25°C, per spec. table	

Nominal Case Dimensions In Inches

All tolerances ±.005” (±.13 mm) unless otherwise specified

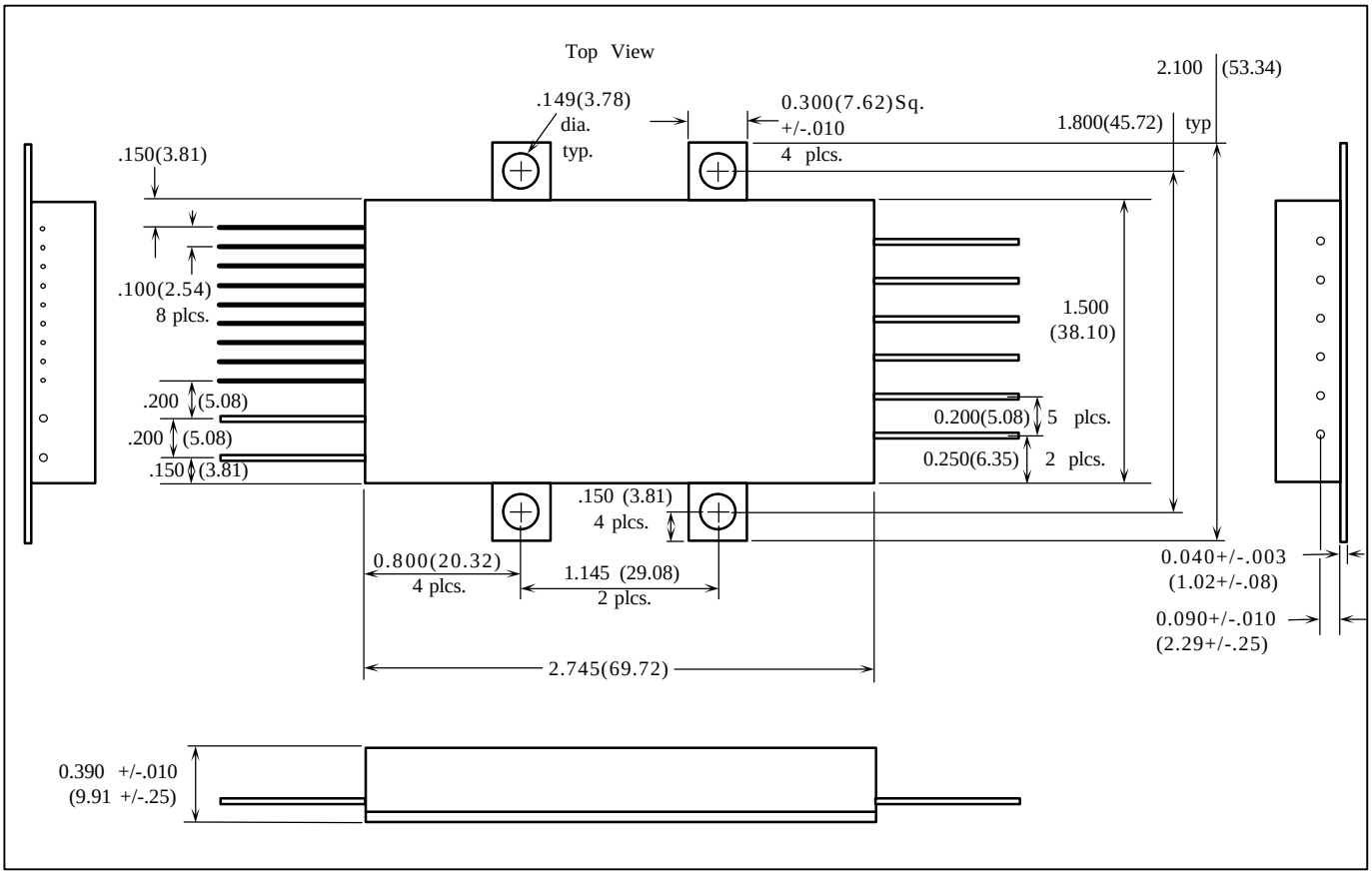

Notes

1. The final product weight is 85 grams maximum.
2. The package base material is made of molybdenum and is nominally 40 mils (1.02 mm) thick. The “runout” is less than 2 mils per inch (0.02 mm per cm).
3. The high current pins (10-17) are 40 mil (1.02 mm) diameter; are made of 99.8% copper; and are plated with gold over nickel.
4. The signal carrying pins (1-9) are 18 mil (0.46 mm) diameter; are Kovar; and are plated with gold over nickel.
5. All pins are a minimum length of 0.740 inches (18.80 mm) when the product is shipped. The pins are typically bent up or down and cut shorter for proper connection into the user’s system.
6. All pin-to-sidewall spacings are guaranteed for a minimum of 500Vdc breakdown at standard air pressure.