LD1117A SERIES

LOW DROP FIXED AND ADJUSTABLE POSITIVE VOLTAGE REGULATORS

- LOW DROPOUT VOLTAGE (1.15V TYP. @ I_{OUT} = 1A, 25°C)
- VERY LOW QUIESCENT CURRENT (5 mA TYP. @ 25°C)
- OUTPUT CURRENT UP TO 1A
- FIXED OUTPUT VOLTAGE OF: 1.2V, 1.8V, 2.5V, 2.85V, 3.3V, 5.0V
- ADJUSTABLE VERSION AVAILABILITY (V_{rel} = 1.25V)
- INTERNAL CURRENT AND THERMAL LIMIT
- ONLY 10 µF FOR STABILITY
- AVAILABLE IN ± 2% (AT 25°C) AND 4% IN FULL TEMPERATURE RANGE
- HIGH SUPPLY VOLTAGE REJECTION: (80dB TYP. AT 25°C)
- TEMPERATURE RANGE: 0°C TO 125°C

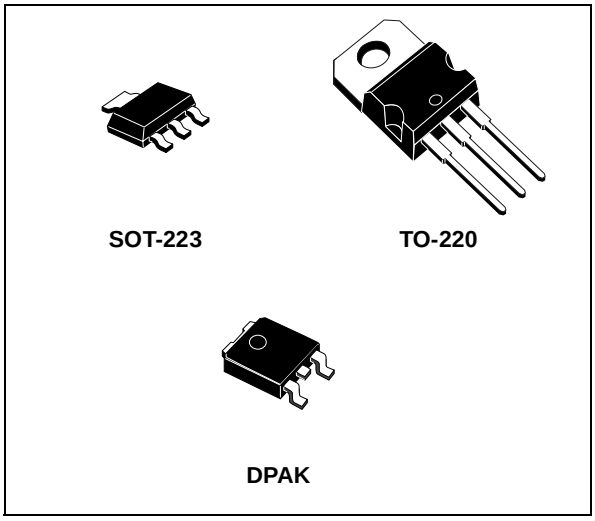

DESCRIPTION

The LD1117A is a LOW DROP Voltage Regulator able to provide up to 1A of Output Current, available even in adjustable version (Vref=1.25V). Concerning fixed versions, are offered the following Output Voltages: 1.2V, 1.8V, 2.5V, 2.85V, 3.3V and 5.0V. The 2.85V type is ideal for SCSI-2 lines active termination. The device is supplied in: SOT-223, DPAK and TO-220. The surface mount packages optimize the thermal characteristics even offering a relevant space saving effect. High efficiency is assured by NPN pass transistor. Only a very common 10µF minimum capacitor is needed for stability. Only chip trimming allows the regulator to reach a very tight output voltage tolerance, within ± 2% at 25°C.

Figure 1: Block Diagram

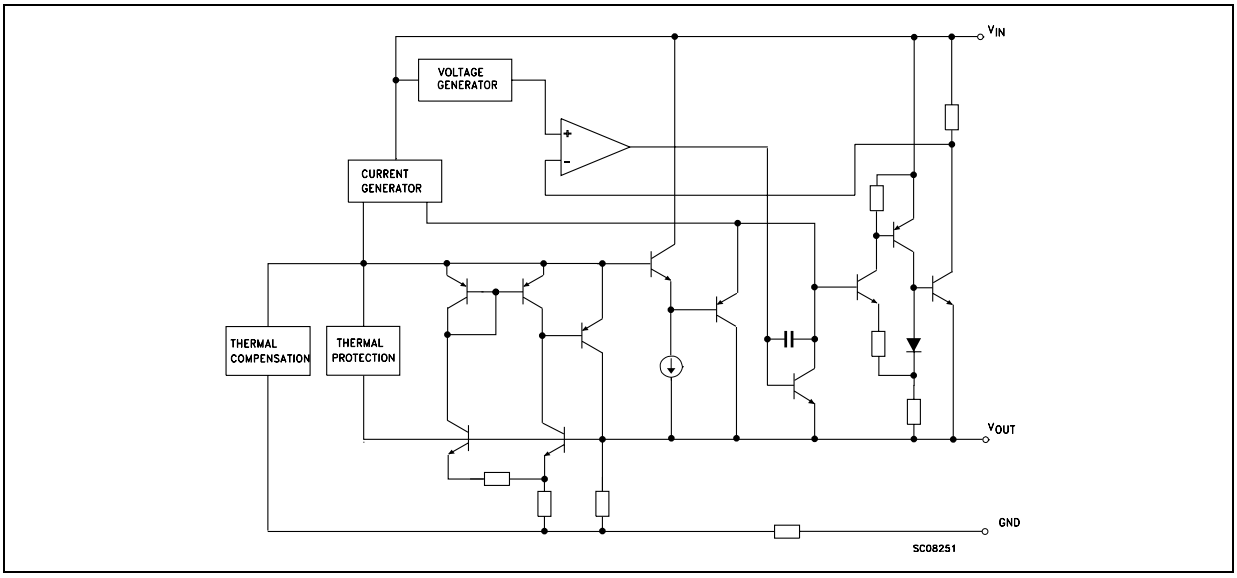

Table 1: Absolute Maximum Ratings

Symbol	Parameter	Value	Unit
V_{IN}	DC Input Voltage	10	V
P_{tot}	Power Dissipation	12	W
T_{stg}	Storage Temperature Range	-40 to +150	°C
T_{op}	Operating Junction Temperature Range	0 to +125	°C

Absolute Maximum Ratings are those values beyond which damage to the device may occur. Functional operation under these condition is not implied. Over the above suggested Max Power Dissipation a Short Circuit could definitively damage the device.

Table 2: Thermal Data

Symbol	Parameter	TO-220	SOT-223	DPAK	Unit
$R_{thj\text{-}case}$	Thermal Resistance Junction-case	3	15	8	°C/W
$R_{thj\text{-}amb}$	Thermal Resistance Junction-ambient	50			°C/W

Figure 2: Pin Connection (top view)

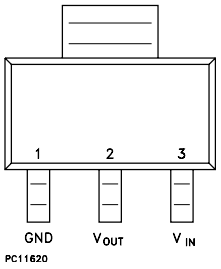

SOT-223

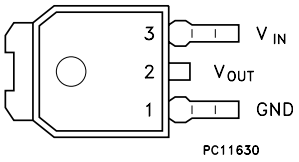

DPAK

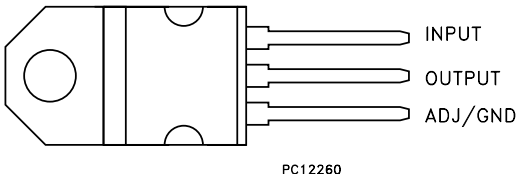

TO-220

NOTE: The TAB is connected to the V_{OUT}.

Table 3: Order Codes

SOT-223	DPAK	TO-220	OUTPUT VOLTAGE
LD1117AS12TR	LD1117ADT12TR	LD1117AV12	1.2 V
LD1117AS18TR	LD1117ADT18TR	LD1117AV18	1.8 V
LD1117AS25TR	LD1117ADT25TR	LD1117AV25	2.5 V
LD1117AS28TR	LD1117ADT28TR	LD1117AV28	2.85 V
LD1117AS33TR	LD1117ADT33TR	LD1117AV33	3.3 V
LD1117AS50TR	LD1117ADT50TR	LD1117AV50	5 V
LD1117AST-R	LD1117ADT-R	LD1117AV	ADJUSTABLE FROM 1.25 TO 15 V

Figure 3: Application Circuit (For Other Fixed Output Voltages)

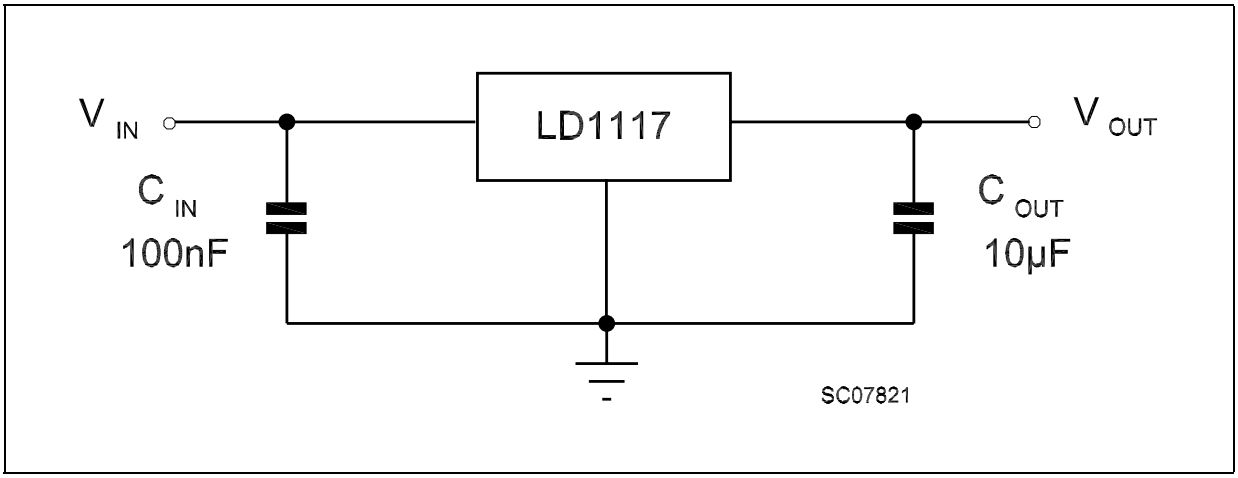

Table 4: Electrical Characteristics Of LD1117A#12 (refer to the test circuits, T_J = 0 to 125°C, C_O = 10 µF, C_I = 10 µF, R = 120 Ω between OUT-GND, unless otherwise specified)

Symbol	Parameter	Test Conditions	Min.	Typ.	Max.	Unit
V_O	Output Voltage	V_I = 5.3 V I_O = 10 mA T_J = 25°C	1.176	1.2	1.224	V
V_O	Output Voltage	I_O = 0 to 1 A V_I = 2.75 to 10 V	1.152	1.2	1.248	V
ΔV_O	Line Regulation	V_I = 2.75 to 8 V I_O = 0 mA		1	6	mV
ΔV_O	Load Regulation	V_I = 2.75 V I_O = 0 to 1 A		1	10	mV
ΔV_O	Temperature Stability			0.5		%
ΔV_O	Long Term Stability	1000 hrs, T_J = 125°C		0.3		%
V_I	Operating Input Voltage	I_O = 100 mA			10	V
I_d	Quiescent Current	$V_I \leq$ 8 V I_O = 0 mA		5	10	mA
I_O	Output Current	V_I - V_O = 5 VT_J = 25°C	1000	1200		mA
eN	Output Noise Voltage	B =10Hz to 10KHz T_J = 25°C		100		µV
SVR	Supply Voltage Rejection	I_O = 40 mA f = 120Hz V_I - V_O = 3 VV_{ripple} = 1 V_{PP}	60	80		dB
V_D	Dropout Voltage	I_O = 100 mA		1	1.10	V
		I_O = 500 mA		1.05	1.15	
		I_O = 1 A		1.15	1.30	
$\Delta V_{O(pwr)}$	Thermal Regulation	T_a = 25°C 30ms Pulse		0.08	0.2	%/W

Table 5: Electrical Characteristics Of LD1117A#18 (refer to the test circuits, T_J = 0 to 125°C, C_O = 10 µF, C_I = 10 µF unless otherwise specified)

Symbol	Parameter	Test Conditions	Min.	Typ.	Max.	Unit
V_O	Output Voltage	V_I = 3.8 V I_O = 10 mA T_J = 25°C	1.764	1.8	1.836	V
V_O	Output Voltage	I_O = 0 to 1 A V_I = 3.3 to 8 V	1.728		1.872	V
ΔV_O	Line Regulation	V_I = 3.3 to 8 V I_O = 0 mA		1	6	mV
ΔV_O	Load Regulation	V_I = 3.3 V I_O = 0 to 1 A		1	10	mV
ΔV_O	Temperature Stability			0.5		%
ΔV_O	Long Term Stability	1000 hrs, T_J = 125°C		0.3		%
V_I	Operating Input Voltage	I_O = 100 mA			10	V
I_d	Quiescent Current	$V_I \leq$ 8 V I_O = 0 mA		5	10	mA
I_O	Output Current	V_I - V_O = 5 VT_J = 25°C	1000			mA
eN	Output Noise Voltage	B =10Hz to 10KHz T_J = 25°C		100		µV
SVR	Supply Voltage Rejection	I_O = 40 mA f = 120Hz V_I - V_O = 3 VV_{ripple} = 1 V_{PP}	60	80		dB
V_D	Dropout Voltage	I_O = 100 mA		1	1.10	V
		I_O = 500 mA		1.05	1.15	
		I_O = 1 A		1.15	1.30	
$\Delta V_{O(pwr)}$	Thermal Regulation	T_a = 25°C 30ms Pulse		0.08	0.2	%/W

Table 6: Electrical Characteristics Of LD1117A#25 (refer to the test circuits, T_J = 0 to 125°C, C_O = 10 µF, C_I = 10 µF unless otherwise specified)

Symbol	Parameter	Test Conditions	Min.	Typ.	Max.	Unit
V_O	Output Voltage	V_I = 4.5 V I_O = 10 mA T_J = 25°C	2.45	2.5	2.55	V
V_O	Output Voltage	I_O = 0 to 1 A V_I = 3.9 to 8 V	2.4		2.6	V
ΔV_O	Line Regulation	V_I = 3.9 to 8 V I_O = 0 mA		1	6	mV
ΔV_O	Load Regulation	V_I = 3.9 V I_O = 0 to 1 A		1	10	mV
ΔV_O	Temperature Stability			0.5		%
ΔV_O	Long Term Stability	1000 hrs, T_J = 125°C		0.3		%
V_I	Operating Input Voltage	I_O = 100 mA			10	V
I_d	Quiescent Current	$V_I \leq$ 10 V I_O = 0 mA		5	10	mA
I_O	Output Current	V_I - V_O = 5 VT_J = 25°C	1000	1200		mA
eN	Output Noise Voltage	B =10Hz to 10KHz T_J = 25°C		100		µV
SVR	Supply Voltage Rejection	I_O = 40 mA f = 120Hz V_I - V_O = 3 VV_{ripple} = 1 V_{PP}	60	80		dB
V_D	Dropout Voltage	I_O = 100 mA		1	1.10	V
		I_O = 500 mA		1.05	1.15	
		I_O = 1 A		1.15	1.30	
$\Delta V_{O(pwr)}$	Thermal Regulation	T_a = 25°C 30ms Pulse		0.08	0.2	%/W

Table 7: Electrical Characteristics Of LD1117A#28 (refer to the test circuits, T_J = 0 to 125°C, C_O = 10 µF, C_I = 10 µF unless otherwise specified)

Symbol	Parameter	Test Conditions	Min.	Typ.	Max.	Unit
V_O	Output Voltage	V_I = 4.85 V I_O = 10 mA T_J = 25°C	2.793	2.85	2.907	V
V_O	Output Voltage	I_O = 0 to 1 A V_I = 4.25 to 10 V	2.736		2.964	V
ΔV_O	Line Regulation	V_I = 4.25 to 8 V I_O = 0 mA		1	6	mV
ΔV_O	Load Regulation	V_I = 4.25 V I_O = 0 to 1 A		1	10	mV
ΔV_O	Temperature Stability			0.5		%
ΔV_O	Long Term Stability	1000 hrs, T_J = 125°C		0.3		%
V_I	Operating Input Voltage	I_O = 100 mA			10	V
I_d	Quiescent Current	$V_I \leq$ 10 V I_O = 0 mA		4.5	10	mA
I_O	Output Current	V_I - V_O = 5 VT_J = 25°C	1000	1200		mA
eN	Output Noise Voltage	B =10Hz to 10KHz T_J = 25°C		100		µV
SVR	Supply Voltage Rejection	I_O = 40 mA f = 120Hz V_I - V_O = 3 VV_{ripple} = 1 V_{PP}	60	75		dB
V_D	Dropout Voltage	I_O = 100 mA		1	1.10	V
		I_O = 500 mA		1.05	1.15	
		I_O = 1 A		1.15	1.30	
$\Delta V_{O(pwr)}$	Thermal Regulation	T_a = 25°C 30ms Pulse		0.08	0.2	%/W

Table 8: Electrical Characteristics Of LD1117A#33 (refer to the test circuits, T_J = 0 to 125°C, C_O = 10 µF, C_I = 10 µF unless otherwise specified)

Symbol	Parameter	Test Conditions	Min.	Typ.	Max.	Unit
V_O	Output Voltage	V_I = 5.3 V I_O = 10 mA T_J = 25°C	3.234	3.3	3.366	V
V_O	Output Voltage	I_O = 0 to 1 A V_I = 4.75 to 10 V	3.168		3.432	V
ΔV_O	Line Regulation	V_I = 4.75 to 8 V I_O = 0 mA		1	6	mV
ΔV_O	Load Regulation	V_I = 4.75 V I_O = 0 to 1 A		1	10	mV
ΔV_O	Temperature Stability			0.5		%
ΔV_O	Long Term Stability	1000 hrs, T_J = 125°C		0.3		%
V_I	Operating Input Voltage	I_O = 100 mA			10	V
I_d	Quiescent Current	$V_I \leq$ 10 V I_O = 0 mA		5	10	mA
I_O	Output Current	V_I - V_O = 5 VT_J = 25°C	1000	1200		mA
eN	Output Noise Voltage	B =10Hz to 10KHz T_J = 25°C		100		µV
SVR	Supply Voltage Rejection	I_O = 40 mA f = 120Hz V_I - V_O = 3 VV_{ripple} = 1 V_{PP}	60	75		dB
V_D	Dropout Voltage	I_O = 100 mA		1	1.10	V
		I_O = 500 mA		1.05	1.15	
		I_O = 1 A		1.15	1.30	
$\Delta V_{O(pwr)}$	Thermal Regulation	T_a = 25°C 30ms Pulse		0.08	0.2	%/W

Table 9: Electrical Characteristics Of LD1117A#50 (refer to the test circuits, T_J = 0 to 125°C, C_O = 10 µF, C_I = 10 µF unless otherwise specified)

Symbol	Parameter	Test Conditions	Min.	Typ.	Max.	Unit
V_O	Output Voltage	V_I = 7 V I_O = 10 mA T_J = 25°C	4.9	5	5.1	V
V_O	Output Voltage	I_O = 0 to 1 A V_I = 6.4 to 10 V	4.8		5.2	V
ΔV_O	Line Regulation	V_I = 6.4 to 8 V I_O = 0 mA		1	6	mV
ΔV_O	Load Regulation	V_I = 6.4 V I_O = 0 to 1 A		1	10	mV
ΔV_O	Temperature Stability			0.5		%
ΔV_O	Long Term Stability	1000 hrs, T_J = 125°C		0.3		%
V_I	Operating Input Voltage	I_O = 100 mA			10	V
I_d	Quiescent Current	$V_I \leq$ 10 V I_O = 0 mA		5	10	mA
I_O	Output Current	V_I - V_O = 5 VT_J = 25°C	1000	1200		mA
eN	Output Noise Voltage	B =10Hz to 10KHz T_J = 25°C		100		µV
SVR	Supply Voltage Rejection	I_O = 40 mA f = 120Hz V_I - V_O = 3 VV_{ripple} = 1 V_{PP}	60	80		dB
V_D	Dropout Voltage	I_O = 100 mA		1	1.10	V
		I_O = 500 mA		1.05	1.15	
		I_O = 1 A		1.15	1.30	
$\Delta V_{O(pwr)}$	Thermal Regulation	T_a = 25°C 30ms Pulse		0.08	0.2	%/W

Table 10: Electrical Characteristics Of LD1117A (Adjustable) (refer to the test circuits, T_J = 0 to 125°C, C_O = 10 µF, C_I = 10 µF unless otherwise specified)

Symbol	Parameter	Test Conditions	Min.	Typ.	Max.	Unit
V_O	Output Voltage	V_I = 5.3 V I_O = 10 mA T_J = 25°C	1.225	1.25	1.275	V
V_O	Output Voltage	I_O = 0 to 1 A V_I = 2.75 to 10 V	1.2		1.3	V
ΔV_O	Line Regulation	V_I = 2.75 to 8 V I_O = 0 mA		1	6	mV
ΔV_O	Load Regulation	V_I = 2.75 V I_O = 0 to 1 A		1	10	mV
ΔV_O	Temperature Stability			0.5		%
ΔV_O	Long Term Stability	1000 hrs, T_J = 125°C		0.3		%
V_I	Operating Input Voltage	I_O = 100 mA			10	V
I_d	Quiescent Current	$V_I \leq$ 8 V I_O = 0 mA		5	10	mA
I_O	Output Current	V_I - V_O = 5 VT_J = 25°C	1000	1200		mA
eN	Output Noise Voltage	B =10Hz to 10KHz T_J = 25°C		100		µV
SVR	Supply Voltage Rejection	I_O = 40 mA f = 120Hz V_I - V_O = 3 VV_{ripple} = 1 V_{PP}	60	80		dB
V_D	Dropout Voltage	I_O = 100 mA		1	1.10	V
		I_O = 500 mA		1.05	1.15	
		I_O = 1 A		1.15	1.30	
$\Delta V_{O(pwr)}$	Thermal Regulation	T_a = 25°C 30ms Pulse		0.08	0.2	%/W

TYPICAL APPLICATIONS

Figure 4: Negative Supply

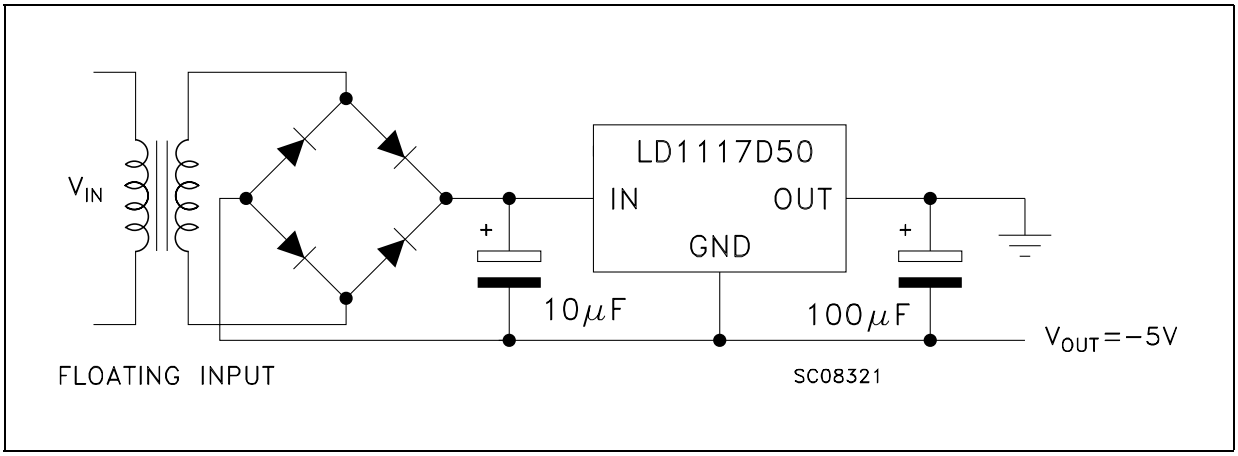

Figure 5: Active Terminator for SCSI-2 BUS

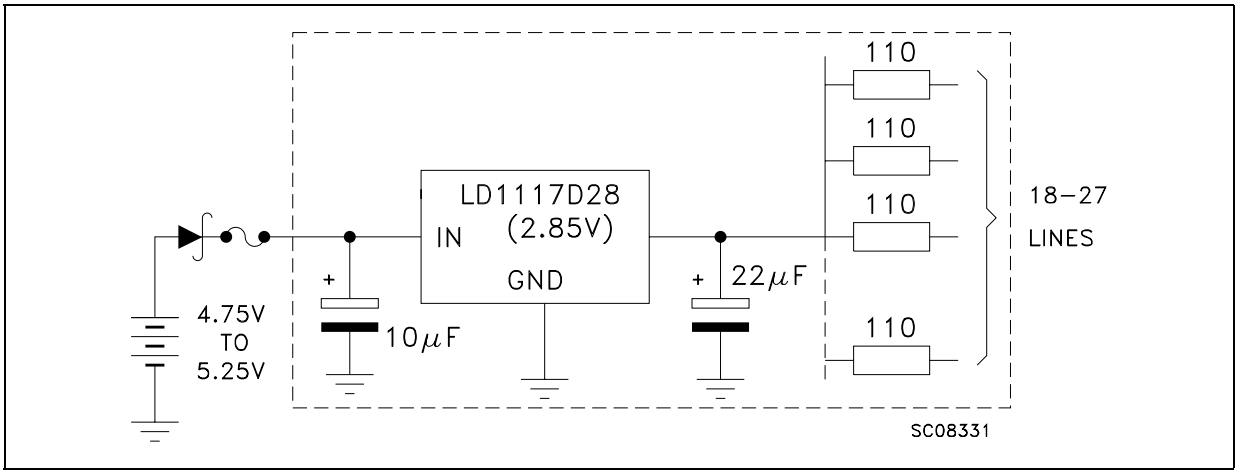

Figure 6: Circuit for Increasing Output Voltage

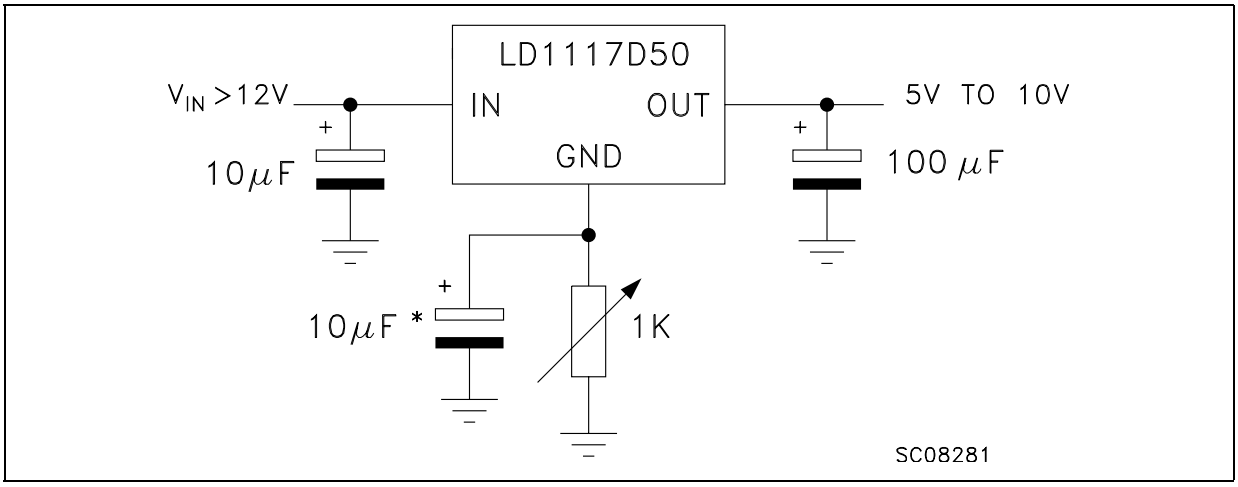

Figure 7: Voltage Regulator With Reference

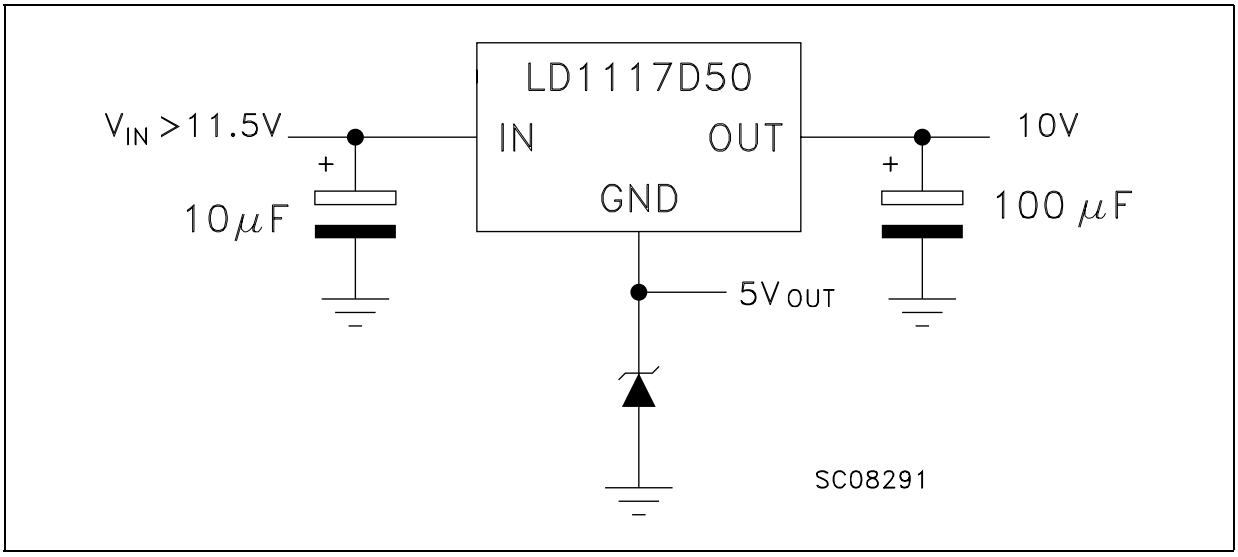

Figure 8: Battery Backed-up Regulated Supply

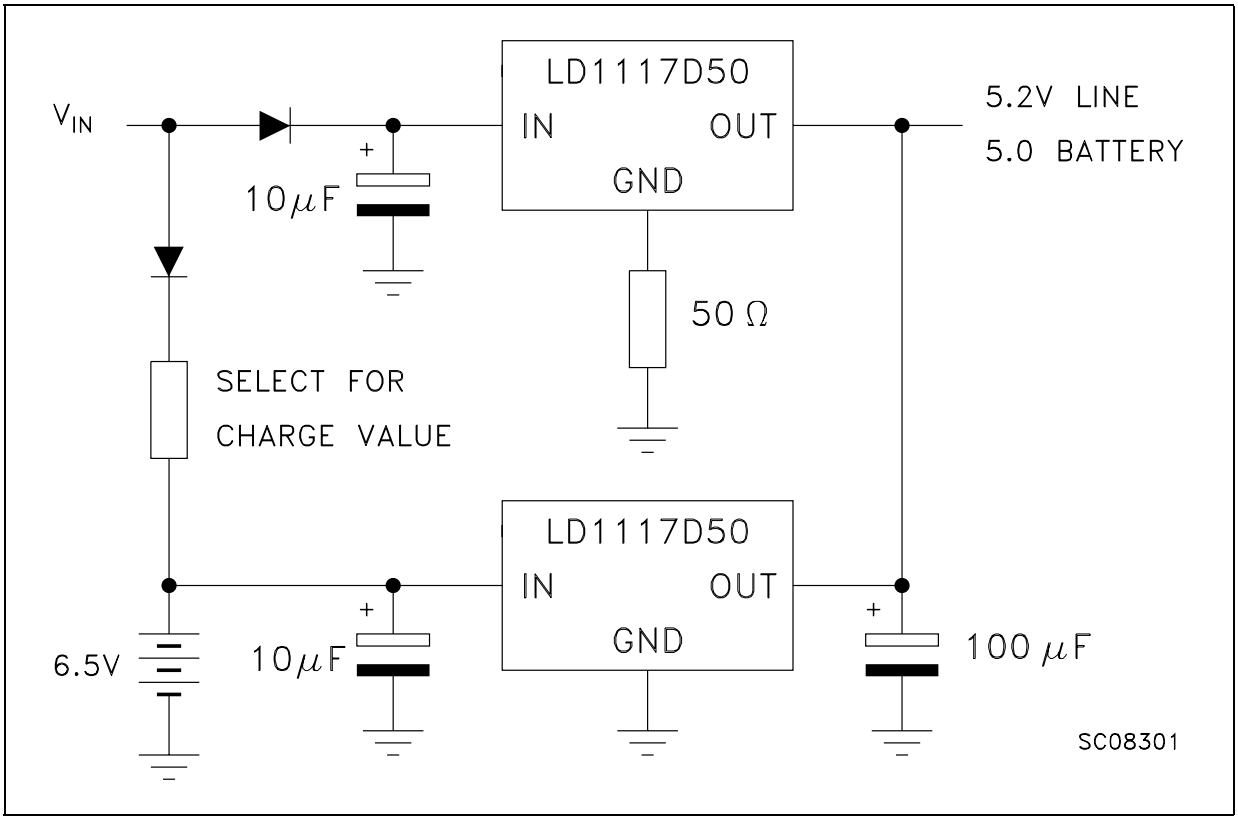

Figure 9: Post-Regulated Dual Supply

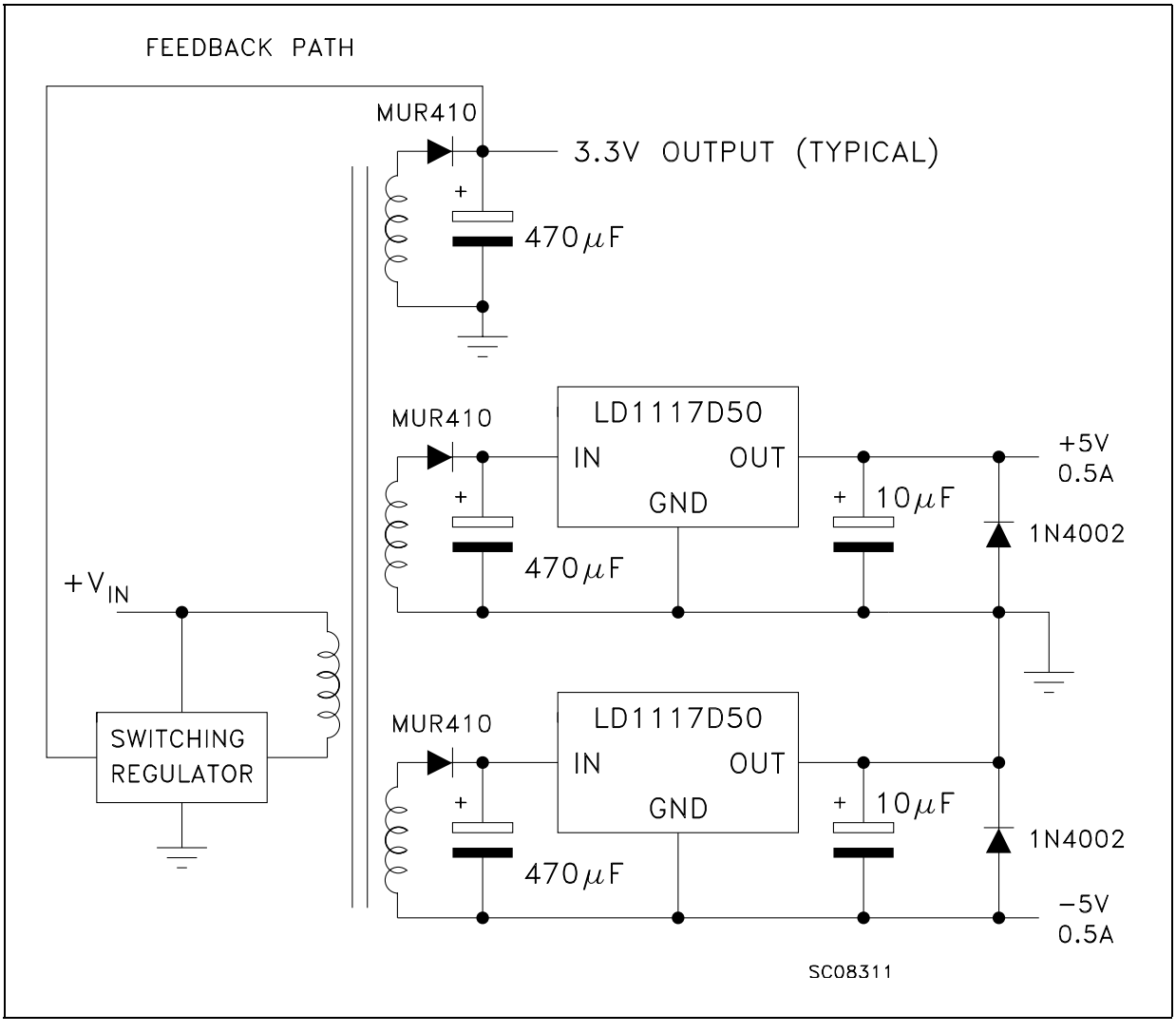

LD1117A ADJUSTABLE: APPLICATION NOTE

The LD1117A ADJUSTABLE has a thermal stabilized 1.25±0.012V reference voltage between the OUT and ADJ pins. I_{ADJ} is 60µA typ. (120µA max.) and ΔI_{ADJ} is 1µA typ. (5µA max.).

R1 is normally fixed to 120Ω. From figure 7 we obtain:

$V_{OUT} = V_{REF} + R2\ (I_{ADJ} + I_{R1}) = V_{REF} + R2\ (I_{ADJ} + V_{REF}/R1) = V_{REF}\ (1 + R2 / R1) + R2 \times I_{ADJ}$.

In normal application R2 value is in the range of few Kohm, so the R2 x I_{DJ} product could not be considered in the V_{OUT} calculation; then the above expression becomes:

$V_{OUT} = V_{REF}\ (1 + R2 / R1)$.

In order to have the better load regulation it is important to realize a good Kelvin connection of R1 and R2 resistors. In particular R1 connection must be realized very close to OUT and ADJ pin, while R2 ground connection must be placed as near as possible to the negative Load pin. Ripple rejection can be improved by introducing a 10µF electrolytic capacitor placed in parallel to the R2 resistor (see Fig. 10).

Figure 10: Adjustable Output Voltage Application

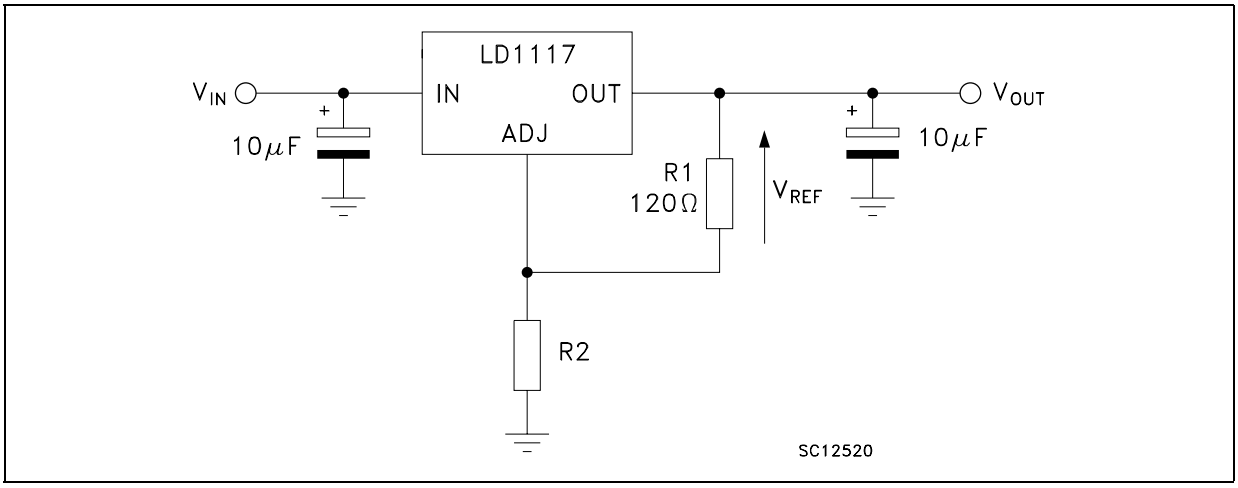

Figure 11: Adjustable Output Voltage Application with improved Ripple Rejection

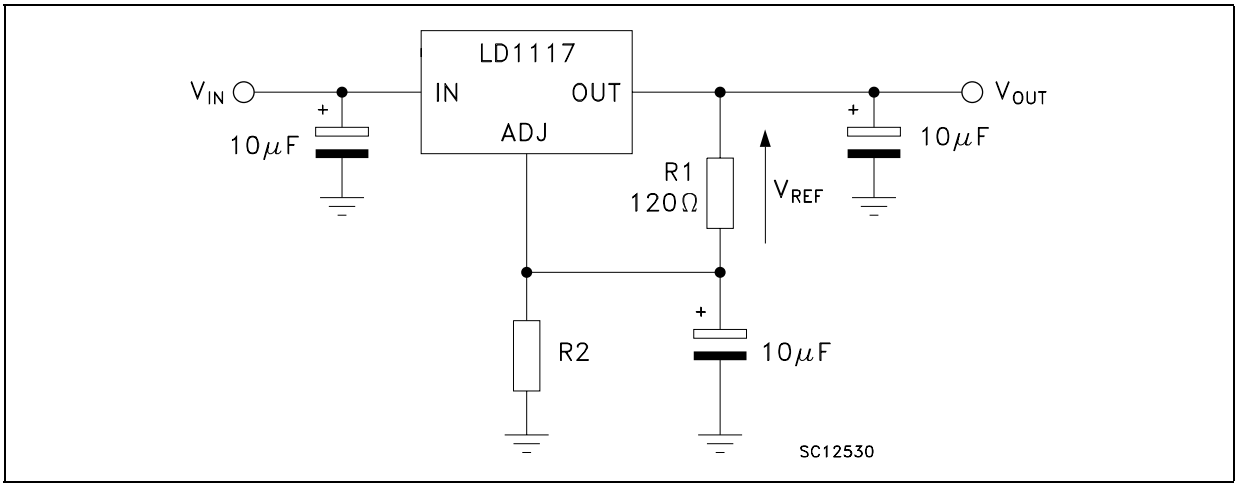

SOT-223 MECHANICAL DATA

DIM.	mm.			mils		
	MIN.	TYP	MAX.	MIN.	TYP.	MAX.
A			1.8			70.9
A1	0.02		0.1	0.8		3.9
B	0.6	0.7	0.85	23.6	27.6	33.5
B1	2.9	3	3.15	114.2	118.1	124.0
c	0.24	0.26	0.35	9.4	10.2	13.8
D	6.3	6.5	6.7	248.0	255.9	263.8
e		2.3			90.6	
e1		4.6			181.1	
E	3.3	3.5	3.7	129.9	137.8	145.7
H	6.7	7	7.3	129.9	137.8	145.7
V			10°			10°

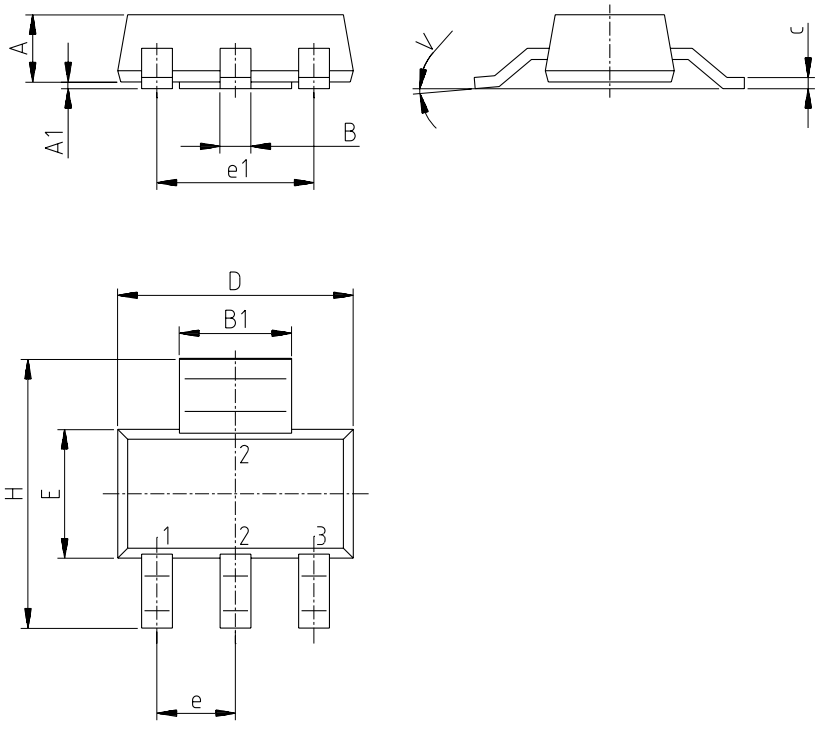

0046067/H

DPAK MECHANICAL DATA

DIM.	mm.			inch		
	MIN.	TYP	MAX.	MIN.	TYP.	MAX.
A	2.2		2.4	0.086		0.094
A1	0.9		1.1	0.035		0.043
A2	0.03		0.23	0.001		0.009
B	0.64		0.9	0.025		0.035
B2	5.2		5.4	0.204		0.212
C	0.45		0.6	0.017		0.023
C2	0.48		0.6	0.019		0.023
D	6		6.2	0.236		0.244
D1		5.1			0.200	
E	6.4		6.6	0.252		0.260
E1		4.7			0.185	
e		2.28			0.090	
e1	4.4		4.6	0.173		0.181
H	9.35		10.1	0.368		0.397
L	1			0.039		
(L1)		2.8			0.110	
L2		0.8			0.031	
L4	0.6		1	0.023		0.039

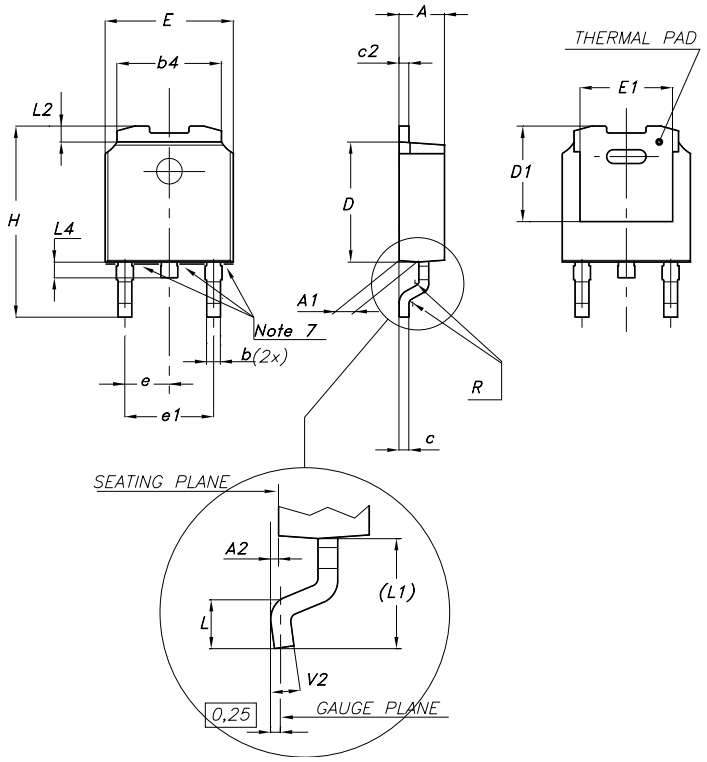

0068772-F

TO-220 MECHANICAL DATA

DIM.	mm.			inch		
	MIN.	TYP	MAX.	MIN.	TYP.	MAX.
A	4.40		4.60	0.173		0.181
C	1.23		1.32	0.048		0.051
D	2.40		2.72	0.094		0.107
D1		1.27			0.050	
E	0.49		0.70	0.019		0.027
F	0.61		0.88	0.024		0.034
F1	1.14		1.70	0.044		0.067
F2	1.14		1.70	0.044		0.067
G	4.95		5.15	0.194		0.203
G1	2.4		2.7	0.094		0.106
H2	10.0		10.40	0.393		0.409
L2		16.4			0.645	
L4	13.0		14.0	0.511		0.551
L5	2.65		2.95	0.104		0.116
L6	15.25		15.75	0.600		0.620
L7	6.2		6.6	0.244		0.260
L9	3.5		3.93	0.137		0.154
DIA.	3.75		3.85	0.147		0.151

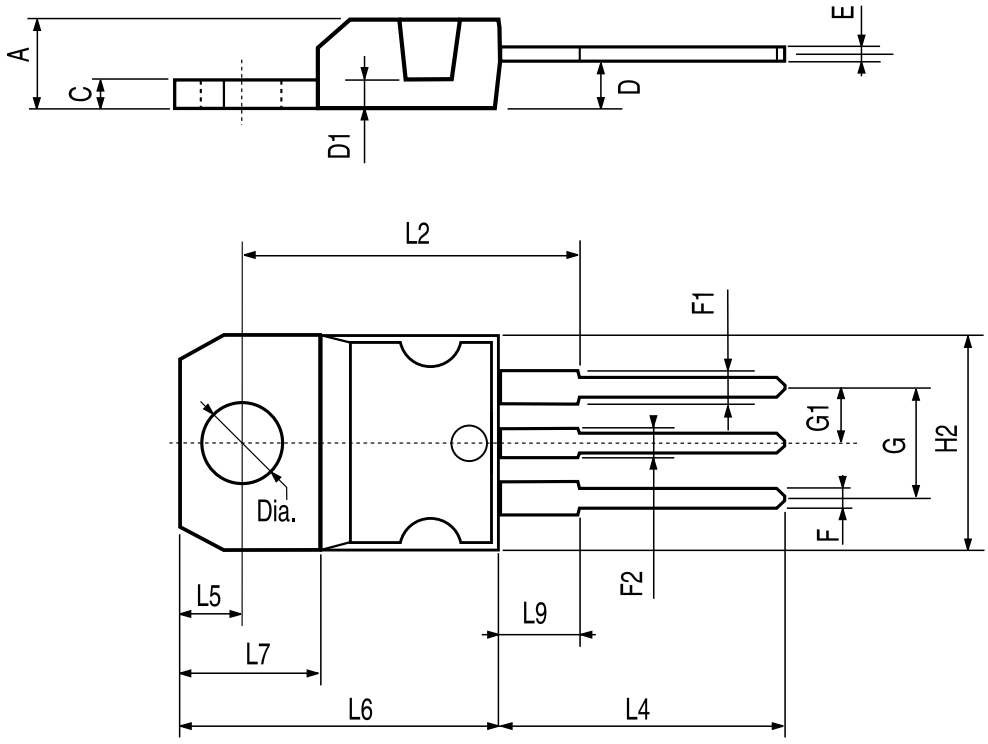

P011C

Tape & Reel SOT223 MECHANICAL DATA

DIM.	mm.			inch		
	MIN.	TYP	MAX.	MIN.	TYP.	MAX.
A			330			12.992
C	12.8	13.0	13.2	0.504	0.512	0.519
D	20.2			0.795		
N	60			2.362		
T			14.4			0.567
Ao	6.73	6.83	6.93	0.265	0.269	0.273
Bo	7.32	7.42	7.52	0.288	0.292	0.296
Ko	1.78		2	0.070		0.078
Po	3.9	4.0	4.1	0.153	0.157	0.161
P	7.9	8.0	8.1	0.311	0.315	0.319

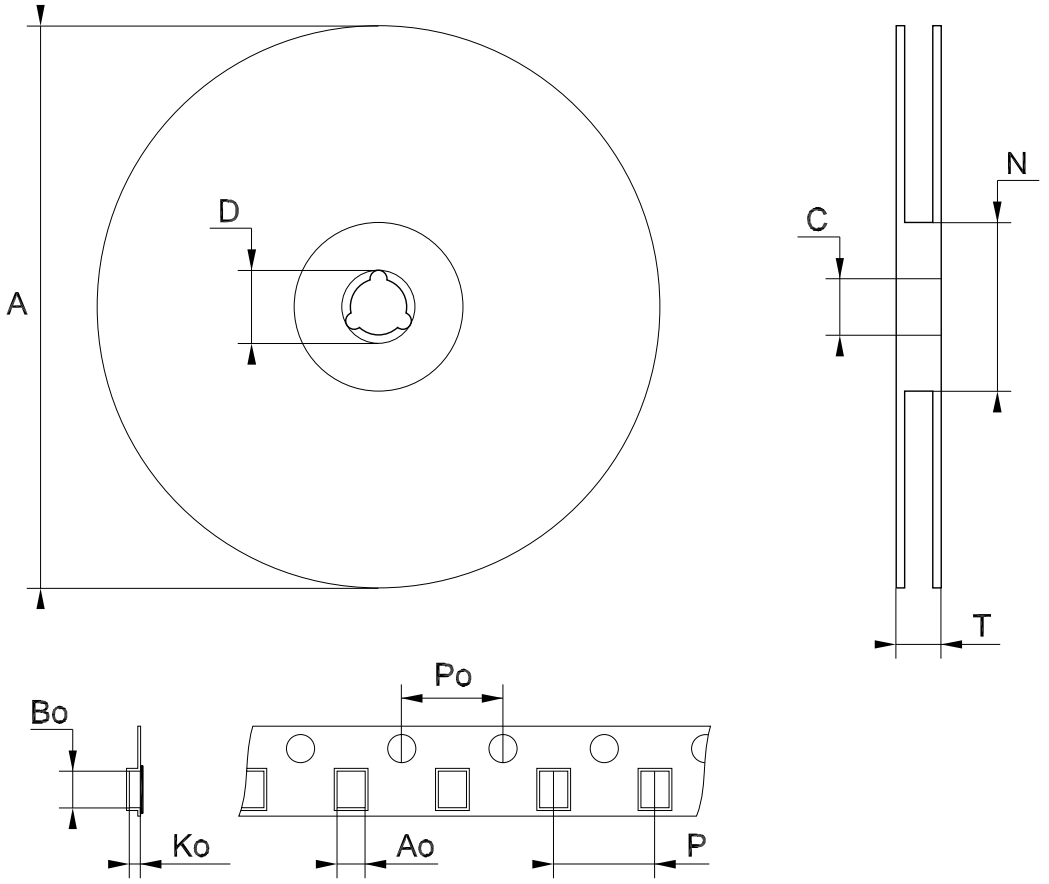

Note: Drawing not in scale

Tape & Reel DPAK-PPAK MECHANICAL DATA

DIM.	mm.			inch		
	MIN.	TYP	MAX.	MIN.	TYP.	MAX.
A			330			12.992
C	12.8	13.0	13.2	0.504	0.512	0.519
D	20.2			0.795		
N	60			2.362		
T			22.4			0.882
Ao	6.80	6.90	7.00	0.268	0.272	0.2.76
Bo	10.40	10.50	10.60	0.409	0.413	0.417
Ko	2.55	2.65	2.75	0.100	0.104	0.105
Po	3.9	4.0	4.1	0.153	0.157	0.161
P	7.9	8.0	8.1	0.311	0.315	0.319

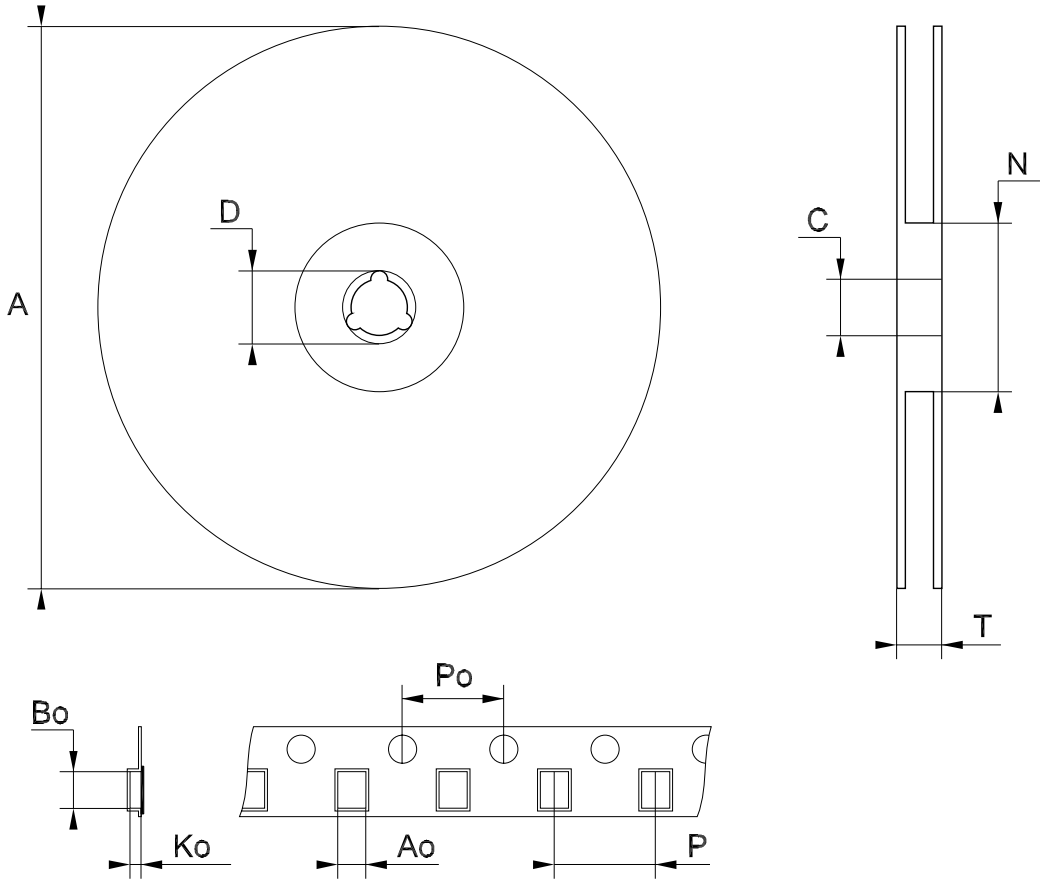

Note: Drawing not in scale

Table 11: Revision History

Date	Revision	Description of Changes
29-Sep-2004	11	Add new Part Number #12.
12-Oct-2004	12	Mistake V_O max. - Table 4.

Information furnished is believed to be accurate and reliable. However, STMicroelectronics assumes no responsibility for the consequences of use of such information nor for any infringement of patents or other rights of third parties which may result from its use. No license is granted by implication or otherwise under any patent or patent rights of STMicroelectronics. Specifications mentioned in this publication are subject to change without notice. This publication supersedes and replaces all information previously supplied. STMicroelectronics products are not authorized for use as critical components in life support devices or systems without express written approval of STMicroelectronics.

The ST logo is a registered trademark of STMicroelectronics

All other names are the property of their respective owners

© 2004 STMicroelectronics - All Rights Reserved

STMicroelectronics group of companies

Australia - Belgium - Brazil - Canada - China - Czech Republic - Finland - France - Germany - Hong Kong - India - Israel - Italy - Japan - Malaysia - Malta - Morocco - Singapore - Spain - Sweden - Switzerland - United Kingdom - United States of America

www.st.com