Positive Adjustable Regulator

FEATURES

- *Guaranteed* 1% Output Voltage Tolerance
- *Guaranteed* max. 0.01%/V Line Regulation
- *Guaranteed* max. 0.3% Load Regulation
- Min. 1.5A Output Current
- 100% Burn-in in Thermal Overload

APPLICATIONS

- Wide Range Power Supplies
- Constant Current Supplies
- Voltage Programmable Supplies

DESCRIPTION

The LT117A Series are 3-terminal positive adjustable voltage regulators which offer improved performance over earlier devices. A major feature of the LT117A is the output voltage tolerance is guaranteed at a maximum of ± 1%, allowing an overall power supply tolerance to be better than 3% using inexpensive 1% resistors. Line and load regulation performance has been improved as well. Additionally, the LT117A reference voltage is guaranteed not to exceed 2% when operating over the full load, line and power dissipation conditions. The LT117A adjustable regulators offer an improved solution for all positive voltage regulator requirements with load currents up to 1.5 amps.

4

Regulator with Reference

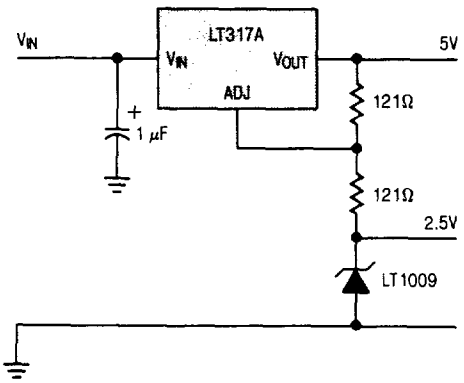

Output Voltage Error

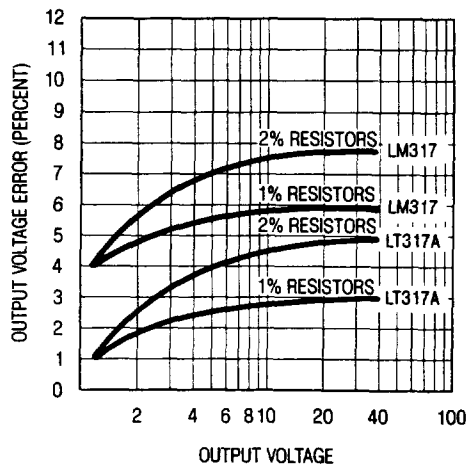

ABSOLUTE MAXIMUM RATINGS

Power Dissipation ..... Internally Limited
Input to Output Voltage Differential 40V
Operating Junction Temperature Range
LT117A/LM117 ..... −55°C to 150°C
LT317A/LM317 ..... 0°C to 125°C
Storage Temperature Range
LT117A/LM117 ..... −65°C to 150°C
LT317A/LM317 ..... −65°C to 150°C
Lead Temperature (Soldering, 10 sec.)..... 300°C

PRECONDITIONING:

100% THERMAL LIMIT BURN-IN

PACKAGE/ORDER INFORMATION

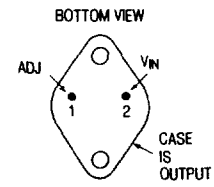

K PACKAGE
TO-3 METAL CAN
(STEEL)

ORDER PART NO.
LT117AK
LT317AK
LM117K
LM317K

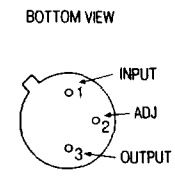

H PACKAGE
TO-39 METAL CAN

ORDER PART NO.
LT117AH
LT317AH
LM117H
LM317H

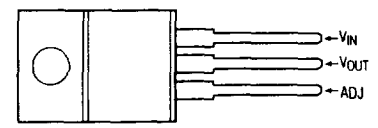

T PACKAGE
TO-220 PLASTIC

ORDER PART NO.
LT317AT
LM317T

ELECTRICAL CHARACTERISTICS (See Note 1) LT117A/LM117

SYMBOL	PARAMETER	CONDITIONS		LT117A MIN	LT117A TYP	LT117A MAX	LM117 MIN	LM117 TYP	LM117 MAX	UNITS
V_{REF}	Reference Voltage	I_{OUT} = 10mA T_J = 25°C		1.238	1.250	1.262				V
		3V ≤ (V_{IN} − V_{OUT}) ≤ 40V 10mA ≤ I_{OUT} ≤ I_{max}, P ≤ P_{max}	●	1.225	1.250	1.270	1.20	1.25	1.30	V
$\frac{\Delta V_{OUT}}{\Delta V_{IN}}$	Line Regulation	3V ≤ (V_{IN} − V_{OUT}) ≤ 40V, (See Note 2)			0.005	0.01		0.01	0.02	%/V
			●		0.01	0.02		0.02	0.05	%/V
$\frac{\Delta V_{OUT}}{\Delta I_{OUT}}$	Load Regulation	10mA ≤ I_{OUT} ≤ I_{max}, (See Note 2) V_{OUT} ≤ 5V V_{OUT} ≥ 5V			5 0.1	15 0.3		5 0.1	15 0.3	mV %
		V_{OUT} ≤ 5V V_{OUT} ≥ 5V	● ●		20 0.3	50 1		20 0.3	50 1	mV %
	Thermal Regulation	T_A = 25°C, 20msec Pulse			0.002	0.02		0.03	0.07	%/W
	Ripple Rejection	V_{OUT} = 10V, f = 120Hz C_{ADJ} = 0	●		65			65		dB
		C_{ADJ} = 10μF	●	66	80		66	80		dB
I_{ADJ}	Adjust Pin Current		●		50	100		50	100	μA
ΔI_{ADJ}	Adjust Pin Current Change	10mA ≤ I_{OUT} ≤ I_{max} 2.5V ≤ (V_{IN} − V_{OUT}) ≤ 40V	●		0.2	5		0.2	5	μA
I_{min}	Minimum Load Current	(V_{IN} − V_{OUT}) = 40V	●		3.5	5		3.5	5	mA
	Current Limit	(V_{IN} − V_{OUT}) ≤ 15V K Package H Package	 ● ●	 1.5 0.5	 2.2 0.8		 1.5 0.5	 2.2 0.8		 A A
		(V_{IN} − V_{OUT}) = 40V, T_j = 25°C K Package H Package		 0.3 0.15	 0.5 0.2		 0.3 0.15	 0.4 0.2		 A A
$\frac{\Delta V_{OUT}}{\Delta Temp}$	Temperature Stability	−55°C ≤ T_j ≤ +150°C			1	2		1		%
$\frac{\Delta V_{OUT}}{\Delta Time}$	Long Term Stability	T_A = 125°C			0.3	1		0.3	1	%
e_n	RMS Output Noise (% of V_{OUT})	T_A = 25°C, 10Hz ≤ f ≤ 10kHz			0.001			0.001		%
Θ_{jc}	Thermal Resistance Junction to Case	H Package K Package			12 2.3	15 3		12 2.3	15 3	°C/W °C/W

LINEAR TECHNOLOGY

ELECTRICAL CHARACTERISTICS (See Note 1) LT317A/LM317

SYMBOL	PARAMETER	CONDITIONS		LT317A MIN	LT317A TYP	LT317A MAX	LM317 MIN	LM317 TYP	LM317 MAX	UNITS
V_{REF}	Reference Voltage	I_{OUT} = 10mA T_j = 25°C		1.238	1.250	1.262				V
		3V ≤ (V_{IN} − V_O) ≤ 40V 10mA ≤ I_{OUT} ≤ I_{max}, P ≤ P_{max}	●	1.225	1.250	1.270	1.20	1.25	1.30	V
$\frac{\Delta V_{OUT}}{\Delta V_{IN}}$	Line Regulation	3V ≤ (V_{IN} − V_{OUT}) ≤ 40V, (See Note 2)			0.005	0.01		0.01	0.04	%/V
			●		0.01	0.02		0.02	0.07	%/V
$\frac{\Delta V_{OUT}}{\Delta I_{OUT}}$	Load Regulation	10mA ≤ I_{OUT} ≤ I_{max}, (See Note 2) V_O ≤ 5V V_O ≥ 5V			5 0.1	25 0.5		5 0.1	25 0.5	mV %
		V_O ≤ 5V V_O ≥ 5V	● ●		20 0.3	50 1		20 0.3	70 1.5	mV %
	Thermal Regulation	T_A = 25°C, 20msec Pulse	●		0.002	0.02		0.04	0.07	%/W
	Ripple Rejection	V_O = 10V, f = 120Hz C_{ADJ} = 0			65			65		dB
		C_{ADJ} = 10μF		66	80		66	80		dB
I_{ADJ}	Adjust Pin Current				50	100		50	100	μA
ΔI_{ADJ}	Adjust Pin Current Change	10mA ≤ I_{OUT} ≤ I_{max} 2.5V ≤ (V_{IN} − V_{OUT}) ≤ 40V	●		0.2	5		0.2	5	μA
I_{min}	Minimum Load Current	(V_{IN} − V_{OUT}) = 40V	●		3.5	10		3.5	10	mA
	Current Limit	(V_{IN} − V_{OUT}) ≤ 15V K and T Package H Package	● ●	1.5 0.5	2.2 0.8		1.5 0.5	2.2 0.8		A A
		(V_{IN} − V_{OUT}) = 40V, T_j = 25°C K and T Package H Package		0.15 0.075	0.4 0.2		0.15 0.075	0.4 0.2		A A
$\frac{\Delta V_{OUT}}{\Delta Temp}$	Temperature Stability	0°C ≤ T_j ≤ 125°C			1	2		1		%
$\frac{\Delta V_{OUT}}{\Delta Time}$	Long Term Stability	T_A = 125°C			0.3	1		0.3	1	%
e_n	RMS Output Noise (% of V_{OUT})	T_A = 25°C, 10Hz ≤ f ≤ 10kHz			0.001			0.001		%
Θ_{jc}	Thermal Resistance Junction to Case	H Package K Package T Package			12 2.3 4	15 3 5		12 2.3 4	15 3	°C/W °C/W °C/W

The ● denotes the specifications which apply over the full operating temperature range.

Note 1: Unless otherwise specified, these specifications apply for V_{IN} − V_{OUT} = 5V; and I_{OUT} = 0.1A for the TO-39 and I_{OUT} = 0.5A for the TO-3 and TO-220 packages. Although power dissipation is internally limited, these specifications are applicable for power dissipations of 2W for the TO-39, and 20W for the TO-3 and TO-220. I_{MAX} is 1.5A for the TO-3 and TO-220 packages and 0.5A for the TO-39.

Note 2: Regulation is measured at constant junction temperature, using pulse testing with a low duty cycle. Changes in output voltage due to heating effects are covered under the specification for thermal regulation. Load regulation is measured on the output pin at a point 1/8" below the base of the K and H package and at the junction of the wide and narrow portion of the lead on the T package.

4

TYPICAL PERFORMANCE CHARACTERISTICS

Load Regulation

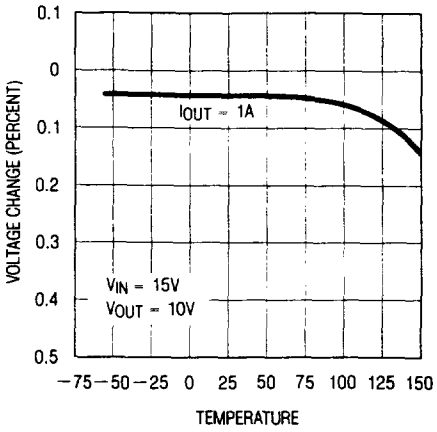

Current Limit (TO-3 and TO-220 Package)

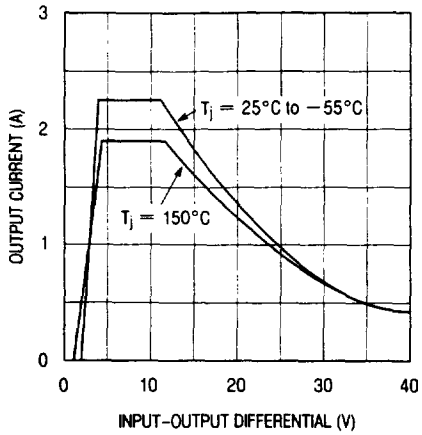

Adjustment Current

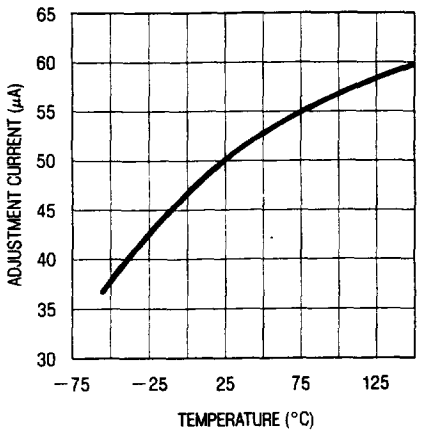

Dropout Voltage

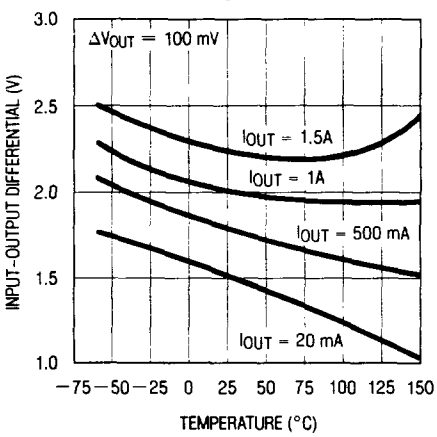

Temperature Stability

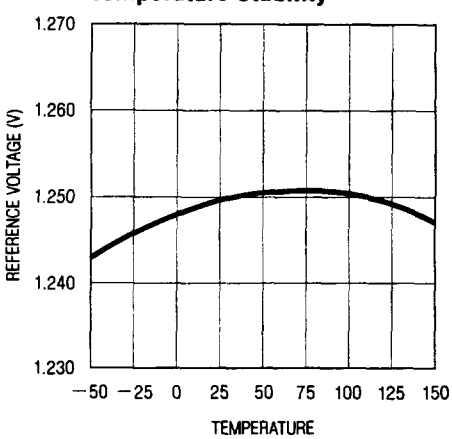

Minimum Operating Current

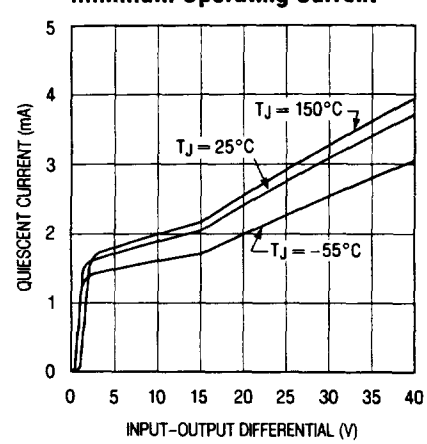

Ripple Rejection

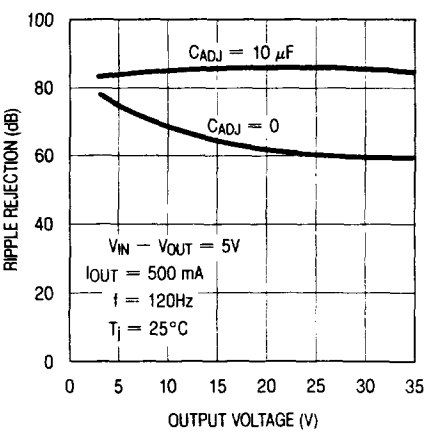

Ripple Rejection (dB)

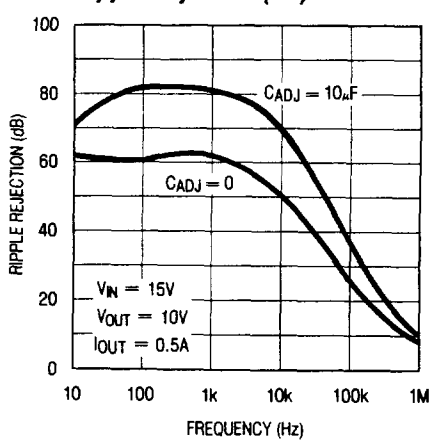

Ripple Rejection

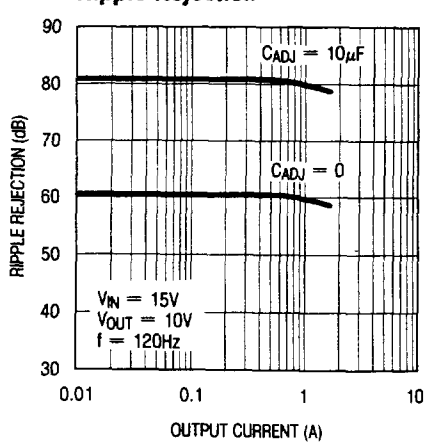

LINEAR TECHNOLOGY

TYPICAL PERFORMANCE CHARACTERISTICS

Output Impedance

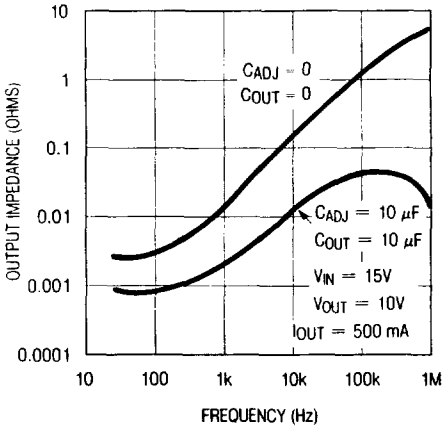

Line Transient Response

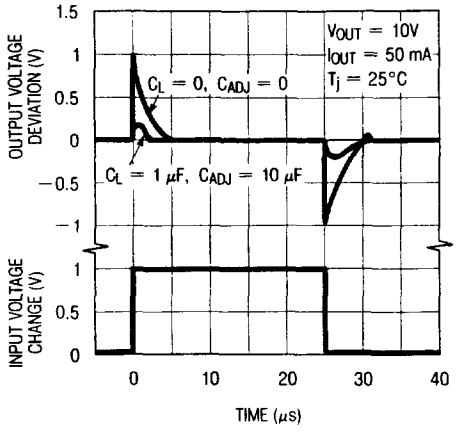

Load Transient Response

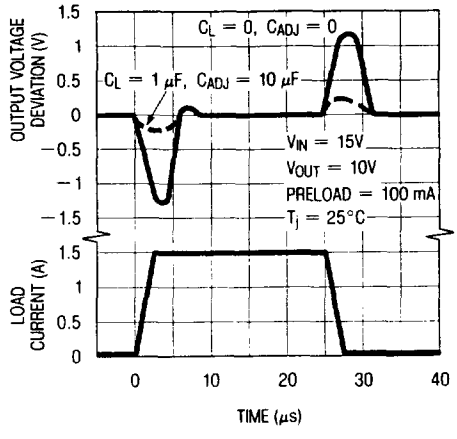

APPLICATIONS INFORMATION

General: The LT117A develops a 1.25V reference voltage between the output and the adjustable terminal (see Figure 1). By placing a resistor, R1, between these two terminals, a constant current is caused to flow through R1 and down through R2 to set the overall output voltage. Normally this current is the specified minimum load current of 5mA or 10mA.

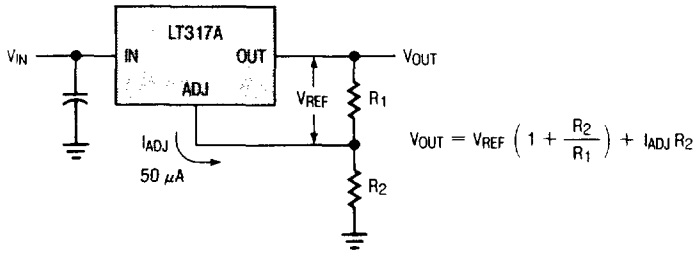

Figure 1

Because I_{ADJ} is very small and constant when compared with the current through R1, it represents a small error and can usually be ignored.

It is easily seen from the above equation, that even if the resistors were of exact value, the accuracy of the output is limited by the accuracy of V_{REF}. Earlier adjustable regulators had a reference tolerance of ±4%. This tolerance is dangerously close to the ±5% supply tolerance required in many logic and analog systems. Further, many 1% resistors can drift 0.01%/°C adding another 1% to the output voltage tolerance.

For example, using 2% resistors and ±4% tolerance for V_{REF}, calculations will show that the expected range of a 5V regulator design would be $4.66V \leq V_{OUT} \leq 5.36V$ or approximately ±7%. If the same example were used for a 15V regulator, the expected tolerance would be ±8%. With these results most applications require some method of trimming, usually a trim pot. This solution is both expensive and not conducive to volume production.

One of the enhancements of Linear Technology's adjustable regulators over existing devices is tightened initial tolerance. This allows relatively inexpensive 1% or 2% film resistors to be used for R1 and R2 while setting output voltage within an acceptable tolerance range.

With a guaranteed 1% reference, a 5V power supply design, using ±2% resistors, would have a worst case manufacturing tolerance of ±4%. If 1% resistors were used, the tolerance would drop to ±2.5%. A plot of the worst case output voltage tolerance as a function of resistor tolerance is shown on the front page.

4

For convenience, a table of standard 1% resistor values is shown below.

Table of ½% and 1% Standard Resistance Values

1.00	1.47	2.15	3.16	4.64	6.81
1.02	1.50	2.21	3.24	4.75	6.98
1.05	1.54	2.26	3.32	4.87	7.15
1.07	1.58	2.32	3.40	4.99	7.32
1.10	1.62	2.37	3.48	5.11	7.50
1.13	1.65	2.43	3.57	5.23	7.68
1.15	1.69	2.49	3.65	5.36	7.87
1.18	1.74	2.55	3.74	5.49	8.06
1.21	1.78	2.61	3.83	5.62	8.25
1.24	1.82	2.67	3.92	5.76	8.45
1.27	1.87	2.74	4.02	5.90	8.66
1.30	1.91	2.80	4.12	6.04	8.87
1.33	1.96	2.87	4.22	6.19	9.09
1.37	2.00	2.94	4.32	6.34	9.31
1.40	2.05	3.01	4.42	6.49	9.53
1.43	2.10	3.09	4.53	6.65	9.76

Standard Resistance Values are obtained from the Decade Table by multiplying by multiples of 10. As an example, 1.21 can represent 1.21Ω, 12.1Ω, 121Ω, 1.21KΩ etc.

Bypass Capacitors: Input bypassing using a 1μF tantalum or 25μF electrolytic is recommended when the input filter capacitors are more than 5 inches from the device. Improved ripple rejection (80 dB) can be accomplished by adding a 10μF capacitor from the adjust pin to ground. Increasing the size of the capacitor to 20μF will help ripple rejection at low output voltage since the reactance of this capacitor should be small compared to the voltage setting resistor, R2. For improved AC transient response and to prevent the possibility of oscillation due to unknown reactive load, a 1μF capacitor is also recommended at the output. Because of their low impedance at high frequencies, the best type of capacitor to use is solid tantalum.

Protection Diodes: The LT117A/317A do not require a protection diode from the adjustment terminal to the output (see Figure 2). Improved internal circuitry eliminates the need for this diode when the adjustment pin is bypassed with a capacitor to improve ripple rejection.

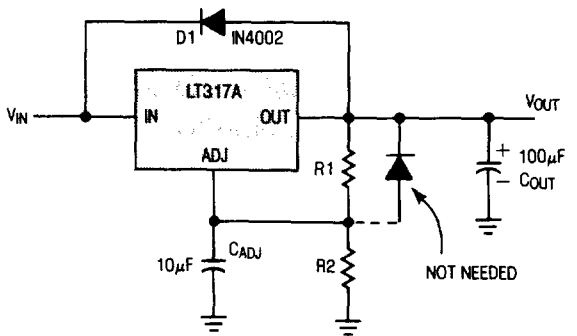

Figure 2

If a very large output capacitor is used, such as a 100μF shown in Figure 2, the regulator could be damaged or destroyed if the input is accidentally shorted to ground or crowbarred. This is due to the output capacitor discharging into the output terminal of the regulator. To prevent damage a diode D1 is recommended to safely discharge the capacitor.

Load Regulation: Because the LT117A is a three-terminal device, it is not possible to provide true remote load sensing. Load regulation will be limited by the resistance of the wire connecting the regulator to the load. For the data sheet specification, regulation is measured at the bottom of the package. Negative side sensing is a true Kelvin connection, with the bottom of the output divider returned to the negative side of the load. Although it may not be immediately obvious, best load regulation is obtained when the top of the divider is connected *directly* to the case *not to the load.* This is illustrated in *Figure 3.* If R1 were connected to the load, the effective resistance between the regulator and the load would be

$$R_p \times \left(\frac{R2 + R1}{R1}\right), R_p = \text{Parasitic Line Resistance.}$$

Connected as shown, R_p is not multiplied by the divider ratio. R_p is about 0.004Ω per foot using 16 guage wire. This translates to 4mV/ft at 1A load current, so it important to keep the positive lead between regulator and load as short as possible.

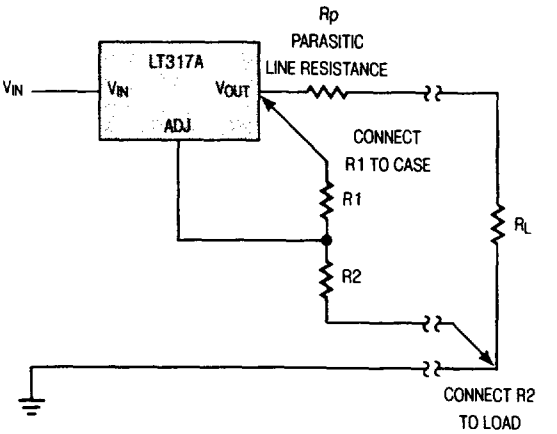

Connections for Best Load Regulation

Figure 3

LINEAR TECHNOLOGY

TYPICAL APPLICATIONS

1.2V–25V Adjustable Regulator

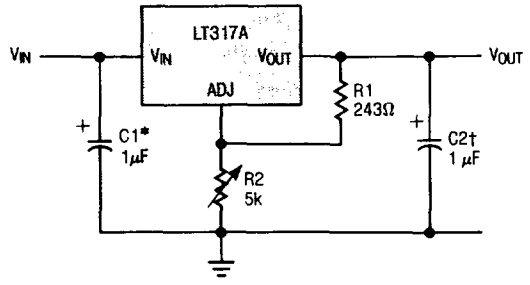

† Optional — improves transient response

* Needed if device is far from filter capactiors

$$V_{OUT} = 1.25V\left(1 + \frac{R2}{R1}\right)$$

Improving Ripple Rejection

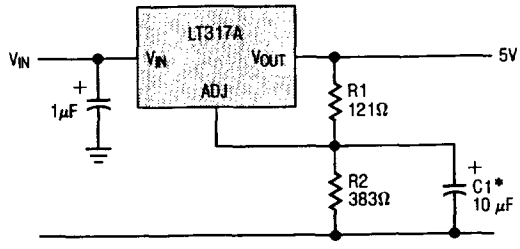

*C1 IMPROVES RIPPLE REJECTION
X_C SHOULD BE SMALL
COMPARED TO R2

Remote Sensing

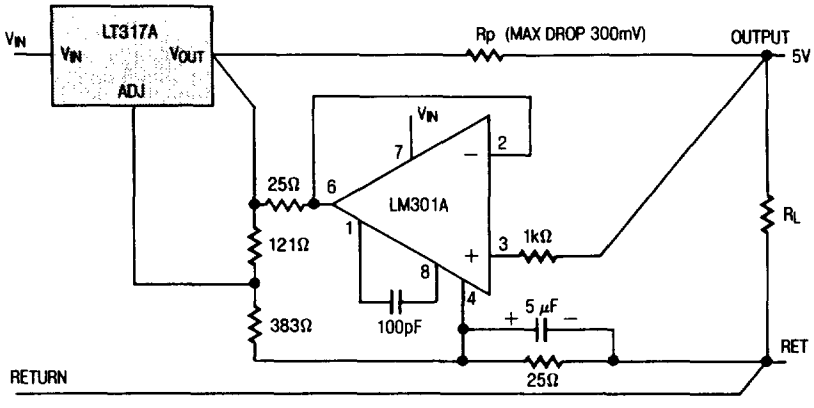

5V Regulator with Shut Down

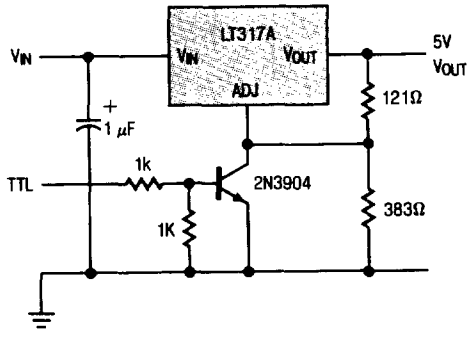

21V Programming Supply for UV PROM/EEROM

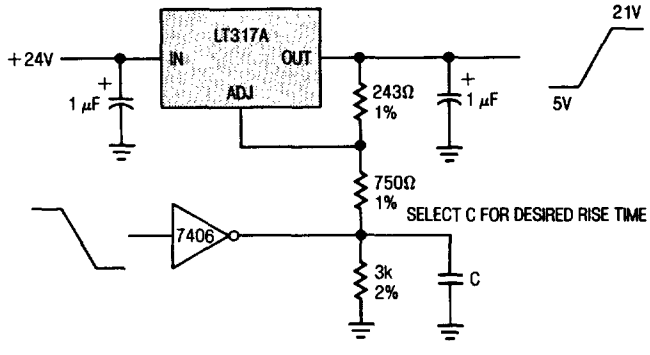

2816 EEPROM Supply Programmer for Read/Write Control

	$\overline{OE}$	Vpp
READ	0V	5V
WRITE		
BYTE	5V	21V
CHIP ERASE	12V	21V

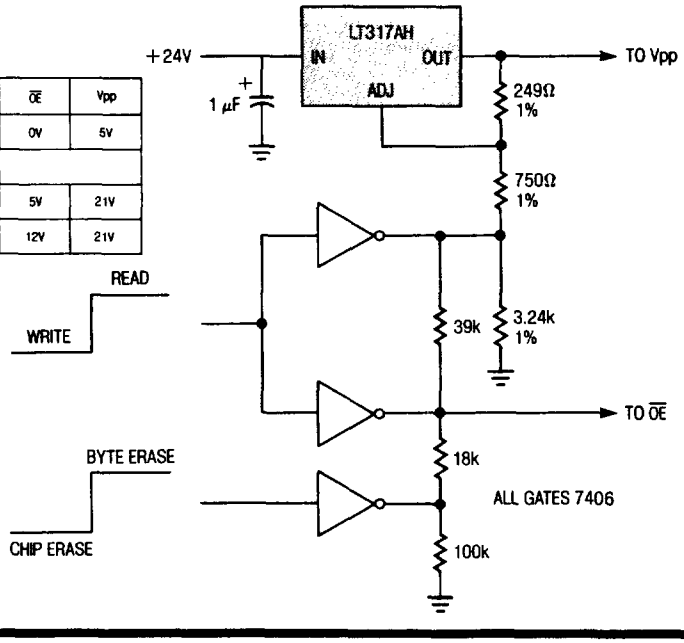

Temperature Compensated Lead Acid Battery Charger

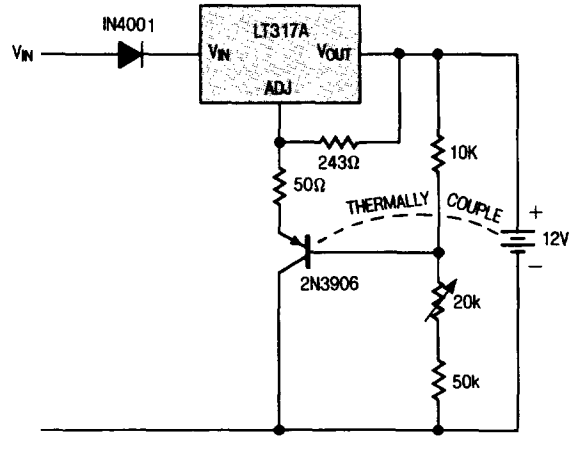

SCHEMATIC DIAGRAM

LT117A/LT317A

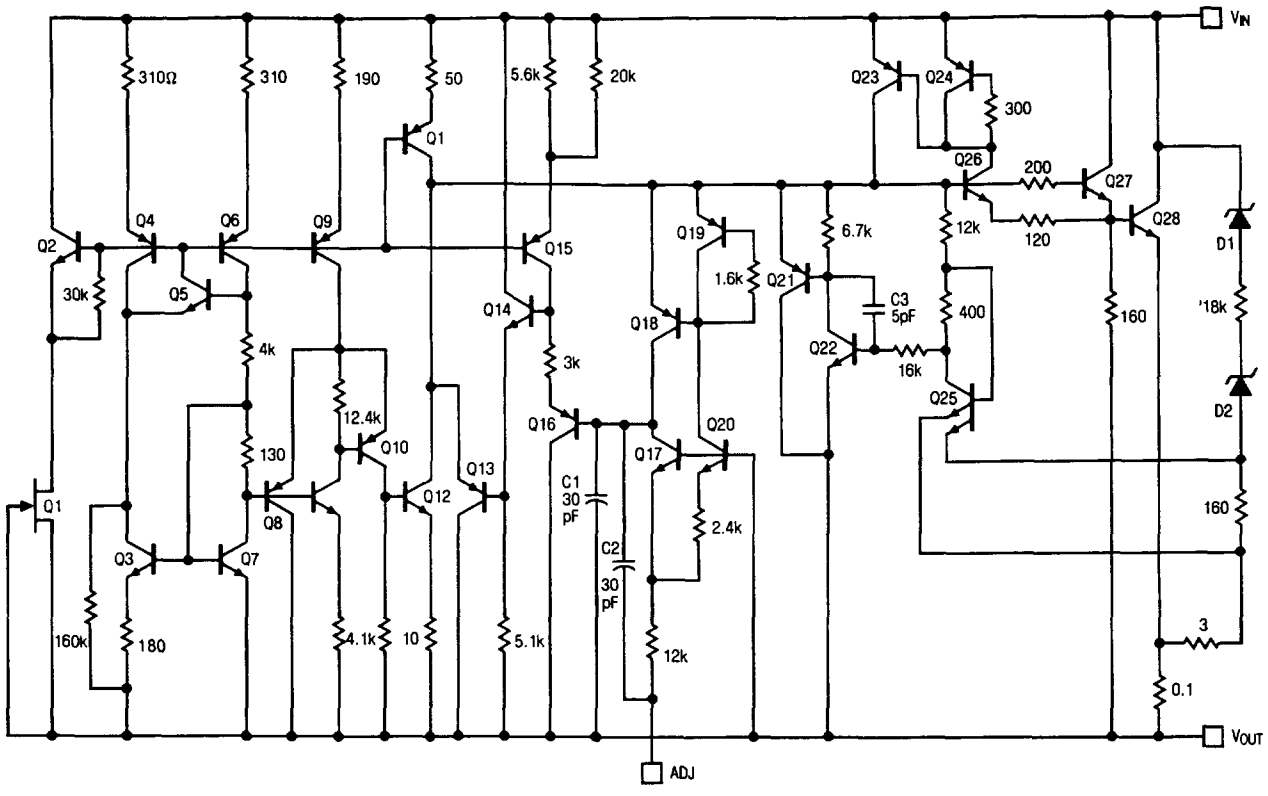

PACKAGE DESCRIPTION

K Package TO-3 STEEL Metal Can

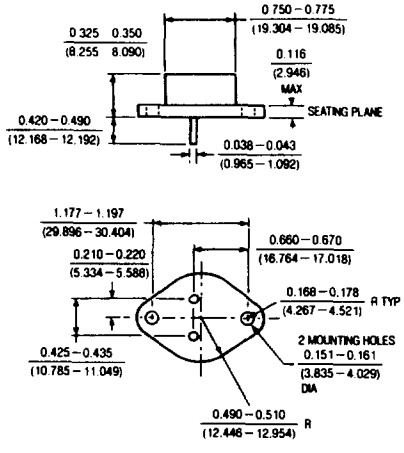

	T_j max.	θ_{ja}	θ_{jc}
117A 117	150°C	35°C/W	3°C/W
317A 317	125°C	35°C/W	3°C/W

T Package TO-220 Plastic

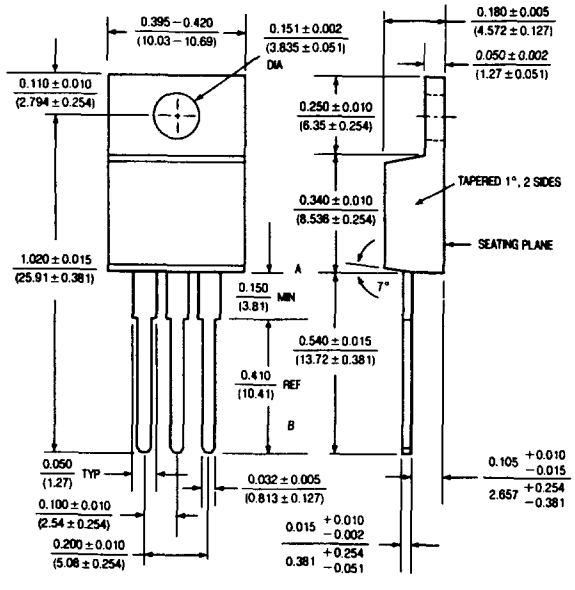

	T_j max.	θ_{ja}	θ_{jc}
317A 317	125°C	50°C/W	5°C/W

H Package 3-Lead Metal Can

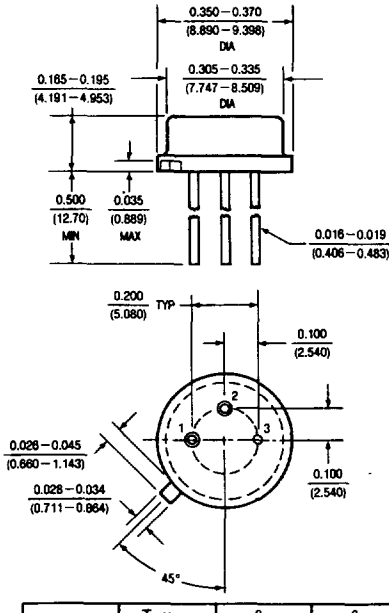

	T_j max.	θ_{ja}	θ_{jc}
117A 117	150°C	150°C/W	15°C/W
317A 317	125°C	150°C/W	15°C/W

LINEAR TECHNOLOGY