MC10EL05, MC100EL05

5V ECL 2-Input Differential AND/NAND

The MC10EL/100EL05 is a 2-input differential AND/NAND gate. The device is functionally equivalent to the E404 device with higher performance capabilities. With propagation delays and output transition times significantly faster than the E404, the EL05 is ideally suited for those applications which require the ultimate in AC performance.

Because a negative 2-input NAND is equivalent to a 2-input OR function, the differential inputs and outputs of the device allows the EL05 to also be used as a 2-input differential OR/NOR gate.

The differential inputs employ clamp circuitry so that under open input conditions (pulled down to V_{EE}) the input to the AND gate will be HIGH. In this way, if one set of inputs is open, the gate will remain active to the other input.

The 100 Series contains temperature compensation.

- 275 ps Propagation Delay
- ESD Protection: > 1 KV HBM, > 100 V MM
- PECL Mode Operating Range: V_{CC}= 4.2 V to 5.7 V with V_{EE}= 0 V
- NECL Mode Operating Range: V_{CC}= 0 V with V_{EE}= –4.2 V to –5.7 V
- Internal Input Pulldown Resistors
- Meets or Exceeds JEDEC Spec EIA/JESD78 IC Latchup Test
- Moisture Sensitivity Level 1
  For Additional Information, see Application Note AND8003/D
- Flammability Rating: UL–94 code V–0 @ 1/8”,
  Oxygen Index 28 to 34
- Transistor Count = 44 devices

LOGIC DIAGRAM AND PINOUT ASSIGNMENT

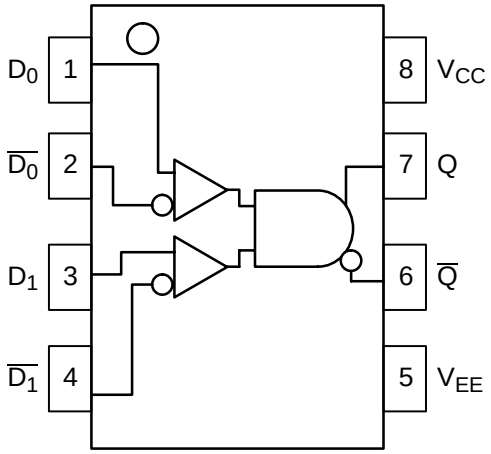

PIN DESCRIPTION

PIN	FUNCTION
D0, $\overline{D0}$; D1, $\overline{D1}$	ECL Data Inputs
Q, $\overline{Q}$	ECL Data Outputs
V_{CC}	Positive Supply
V_{EE}	Negative Supply

ON Semiconductor™

http://onsemi.com

MARKING DIAGRAMS*

SO–8
D SUFFIX
CASE 751

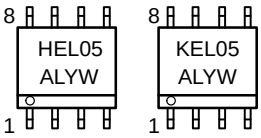

TSSOP–8
DT SUFFIX
CASE 948R

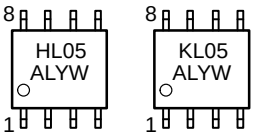

H = MC10
K = MC100
A = Assembly Location
L = Wafer Lot
Y = Year
W = Work Week

*For additional information, see Application Note AND8002/D

TRUTH TABLE

D0	D1	$\overline{D0}$	$\overline{D1}$	Q	$\overline{Q}$
L	L	H	H	L	H
L	H	H	L	L	H
H	L	L	H	L	H
H	H	L	L	H	L

ORDERING INFORMATION

Device	Package	Shipping
MC10EL05D	SO–8	98 Units/Rail
MC10EL05DR2	SO–8	2500 Tape & Reel
MC100EL05D	SO–8	98 Units/Rail
MC100EL05DR2	SO–8	2500 Tape & Reel
MC10EL05DT	TSSOP–8	98 Units/Rail
MC10EL05DTR2	TSSOP–8	2500 Tape & Reel
MC100EL05DT	TSSOP–8	98 Units/Rail
MC100EL05DTR2	TSSOP–8	2500 Tape & Reel

© Semiconductor Components Industries, LLC, 2000

October, 2000 – Rev. 3
Publication Order Number:
MC10EL05/D

MAXIMUM RATINGS (Note 1.)

Symbol	Parameter	Condition 1	Condition 2	Rating	Units
V_{CC}	PECL Mode Power Supply	V_{EE} = 0 V		8	V
V_{EE}	NECL Mode Power Supply	V_{CC} = 0 V		–8	V
V_I	PECL Mode Input Voltage NECL Mode Input Voltage	V_{EE} = 0 V V_{CC} = 0 V	$V_I \leq V_{CC}$ $V_I \geq V_{EE}$	6 –6	V V
I_{out}	Output Current	Continuous Surge		50 100	mA mA
TA	Operating Temperature Range			–40 to +85	°C
T_{stg}	Storage Temperature Range			–65 to +150	°C
θ_{JA}	Thermal Resistance (Junction to Ambient)	0 LFPM 500 LFPM	8 SOIC 8 SOIC	190 130	°C/W °C/W
θ_{JC}	Thermal Resistance (Junction to Case)	std bd	8 SOIC	41 to 44	°C/W
θ_{JA}	Thermal Resistance (Junction to Ambient)	0 LFPM 500 LFPM	8 TSSOP 8 TSSOP	185 140	°C/W °C/W
θ_{JC}	Thermal Resistance (Junction to Case)	std bd	8 TSSOP	41 to 44 ± 5%	°C/W
T_{sol}	Wave Solder	<2 to 3 sec @ 248°C		265	°C

1. Maximum Ratings are those values beyond which device damage may occur.

10EL SERIES PECL DC CHARACTERISTICS V_{CC}= 5.0 V; V_{EE}= 0.0 V (Note 1.)

Symbol	Characteristic	–40°C			25°C			85°C			Unit
		Min	Typ	Max	Min	Typ	Max	Min	Typ	Max	
I_{EE}	Power Supply Current		18	22		18	22		18	22	mA
V_{OH}	Output HIGH Voltage (Note 2.)	3920	4010	4110	4020	4105	4190	4090	4185	4280	mV
V_{OL}	Output LOW Voltage (Note 2.)	3050	3200	3350	3050	3210	3370	3050	3227	3405	mV
V_{IH}	Input HIGH Voltage (Single Ended)	3770		4110	3870		4190	3940		4280	mV
V_{IL}	Input LOW Voltage (Single Ended)	3050		3500	3050		3520	3050		3555	mV
V_{IHCMR}	Input HIGH Voltage Common Mode Range (Differential) (Note 3.)	3.0		4.6	3.0		4.6	3.0		4.6	V
I_{IH}	Input HIGH Current			150			150			150	μA
I_{IL}	Input LOW Current	0.5			0.5			0.3			μA

NOTE: Devices are designed to meet the DC specifications shown in the above table, after thermal equilibrium has been established. The circuit is in a test socket or mounted on a printed circuit board and transverse air flow greater than 500 lfpm is maintained.

1. Input and output parameters vary 1:1 with V_{CC}. V_{EE} can vary +0.25 V / –0.5 V.
2. Outputs are terminated through a 50 ohm resistor to V_{CC}–2 volts.
3. V_{IHCMR} min varies 1:1 with V_{EE}, V_{IHCMR} max varies 1:1 with V_{CC}. The V_{IHCMR} range is referenced to the most positive side of the differential input signal. Normal operation is obtained if the HIGH level falls within the specified range and the peak-to-peak voltage lies between V_{PP}min and 1 V.

10EL SERIES NECL DC CHARACTERISTICS V_{CC}= 0.0 V; V_{EE}= –5.0 V (Note 1.)

Symbol	Characteristic	–40°C			25°C			85°C			Unit
		Min	Typ	Max	Min	Typ	Max	Min	Typ	Max	
I_{EE}	Power Supply Current		18	22		18	22		18	22	mA
V_{OH}	Output HIGH Voltage (Note 2.)	–1080	–990	–890	–980	–895	–810	–910	–815	–720	mV
V_{OL}	Output LOW Voltage (Note 2.)	–1950	–1800	–1650	–1950	–1790	–1630	–1950	–1773	–1595	mV
V_{IH}	Input HIGH Voltage (Single Ended)	–1230		–890	–1130		–810	–1060		–720	mV
V_{IL}	Input LOW Voltage (Single Ended)	–1950		–1500	–1950		–1480	–1950		–1445	mV
V_{IHCMR}	Input HIGH Voltage Common Mode Range (Differential) (Note 3.)	–2.0		–0.4	–2.0		–0.4	–2.0		–0.4	V
I_{IH}	Input HIGH Current			150			150			150	μA
I_{IL}	Input LOW Current	0.5			0.5			0.3			μA

NOTE: Devices are designed to meet the DC specifications shown in the above table, after thermal equilibrium has been established. The circuit is in a test socket or mounted on a printed circuit board and transverse air flow greater than 500 lfpm is maintained.

1. Input and output parameters vary 1:1 with V_{CC}. V_{EE} can vary +0.25 V / –0.5 V.
2. Outputs are terminated through a 50 ohm resistor to V_{CC}–2 volts.
3. V_{IHCMR} min varies 1:1 with V_{EE}, V_{IHCMR} max varies 1:1 with V_{CC}. The V_{IHCMR} range is referenced to the most positive side of the differential input signal. Normal operation is obtained if the HIGH level falls within the specified range and the peak-to-peak voltage lies between V_{PP}min and 1 V.

100EL SERIES PECL DC CHARACTERISTICS V_{CC}= 5.0 V; V_{EE}= 0.0 V (Note 1.)

Symbol	Characteristic	–40°C			25°C			85°C			Unit
		Min	Typ	Max	Min	Typ	Max	Min	Typ	Max	
I_{EE}	Power Supply Current		18	22		18	22		21	25	mA
V_{OH}	Output HIGH Voltage (Note 2.)	3915	3995	4120	3975	4045	4120	3975	4050	4120	mV
V_{OL}	Output LOW Voltage (Note 2.)	3170	3305	3445	3190	3295	3380	3190	3295	3380	mV
V_{IH}	Input HIGH Voltage (Single Ended)	3835		4120	3835		4120	3835		4120	mV
V_{IL}	Input LOW Voltage (Single Ended)	3190		3525	3190		3525	3190		3525	mV
V_{IHCMR}	Input HIGH Voltage Common Mode Range (Differential) (Note 3.)	3.0		4.6	3.0		4.6	3.0		4.6	V
I_{IH}	Input HIGH Current			150			150			150	μA
I_{IL}	Input LOW Current	0.5			0.5			0.5			μA

NOTE: Devices are designed to meet the DC specifications shown in the above table, after thermal equilibrium has been established. The circuit is in a test socket or mounted on a printed circuit board and transverse air flow greater than 500 lfpm is maintained.

1. Input and output parameters vary 1:1 with V_{CC}. V_{EE} can vary +0.8 V / –0.5 V.
2. Outputs are terminated through a 50 ohm resistor to V_{CC}–2 volts.
3. V_{IHCMR} min varies 1:1 with V_{EE}, V_{IHCMR} max varies 1:1 with V_{CC}. The V_{IHCMR} range is referenced to the most positive side of the differential input signal. Normal operation is obtained if the HIGH level falls within the specified range and the peak-to-peak voltage lies between V_{PP}min and 1 V.

100EL SERIES NECL DC CHARACTERISTICS V_{CC}= 0.0 V; V_{EE}= –5.0 V (Note 1.)

Symbol	Characteristic	–40°C			25°C			85°C			Unit
		Min	Typ	Max	Min	Typ	Max	Min	Typ	Max	
I_{EE}	Power Supply Current		18	22		18	22		21	25	mA
V_{OH}	Output HIGH Voltage (Note 2.)	–1085	–1005	–880	–1025	–955	–880	–1025	–955	–880	mV
V_{OL}	Output LOW Voltage (Note 2.)	–1830	–1695	–1555	–1810	–1705	–1620	–1810	–1705	–1620	mV
V_{IH}	Input HIGH Voltage (Single Ended)	–1165		–880	–1165		–880	–1165		–880	mV
V_{IL}	Input LOW Voltage (Single Ended)	–1810		–1475	–1810		–1475	–1810		–1475	mV
V_{IHCMR}	Input HIGH Voltage Common Mode Range (Differential) (Note 3.)	–2.0		–0.4	–2.0		–0.4	–2.0		–0.4	V
I_{IH}	Input HIGH Current			150			150			150	μA
I_{IL}	Input LOW Current	0.5			0.5			0.5			μA

NOTE: Devices are designed to meet the DC specifications shown in the above table, after thermal equilibrium has been established. The circuit is in a test socket or mounted on a printed circuit board and transverse air flow greater than 500 lfpm is maintained.

1. Input and output parameters vary 1:1 with V_{CC}. V_{EE} can vary +0.8 V / –0.5 V.
2. Outputs are terminated through a 50 ohm resistor to V_{CC}–2 volts.
3. V_{IHCMR} min varies 1:1 with V_{EE}, V_{IHCMR} max varies 1:1 with V_{CC}. The V_{IHCMR} range is referenced to the most positive side of the differential input signal. Normal operation is obtained if the HIGH level falls within the specified range and the peak-to-peak voltage lies between V_{PP}min and 1 V.

AC CHARACTERISTICS V_{CC}= 5.0 V; V_{EE}= 0.0 V or V_{CC}= 0.0 V; V_{EE}= –5.0 V (Note 1.)

Symbol	Characteristic	–40°C			25°C			85°C			Unit
		Min	Typ	Max	Min	Typ	Max	Min	Typ	Max	
f_{max}	Maximum Toggle Frequency		TBD			TBD			TBD		GHz
t_{PLH} t_{PHL}	Propagation Delay to Output	135	260	440	185	275	390	215	305	420	ps
V_{PP}	Input Swing (Note 2.)	150		1000	150		1000	150		1000	mV
t_{JITTER}	Cycle–to–Cycle Jitter		TBD			TBD			TBD		ps
t_r t_f	Output Rise/Fall Times Q (20% – 80%)	100	225	350	100	225	350	100	225	350	ps

1. 10 Series: V_{EE} can vary +0.25 V / –0.5 V.
   100 Series: V_{EE} can vary +0.8 V / –0.5 V.
2. $V_{PP(}$min) is minimum input swing for which AC parameters guaranteed. The device has a DC gain of ≈40.

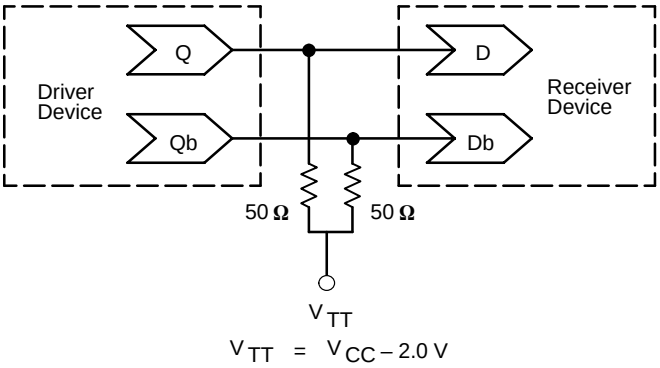

Figure 1. Typical Termination for Output Driver and Device Evaluation (See Application Note AND8020 – Termination of ECL Logic Devices.)

Resource Reference of Application Notes

AN1404	–	ECLinPS Circuit Performance at Non–Standard V_{IH} Levels
AN1405	–	ECL Clock Distribution Techniques
AN1406	–	Designing with PECL (ECL at +5.0 V)
AN1503	–	ECLinPS I/O SPICE Modeling Kit
AN1504	–	Metastability and the ECLinPS Family
AN1560	–	Low Voltage ECLinPS SPICE Modeling Kit
AN1568	–	Interfacing Between LVDS and ECL
AN1596	–	ECLinPS Lite Translator ELT Family SPICE I/O Model Kit
AN1650	–	Using Wire–OR Ties in ECLinPS Designs
AN1672	–	The ECL Translator Guide
AND8001	–	Odd Number Counters Design
AND8002	–	Marking and Date Codes
AND8020	–	Termination of ECL Logic Devices

PACKAGE DIMENSIONS

SO–8
D SUFFIX
PLASTIC SOIC PACKAGE
CASE 751–07
ISSUE V

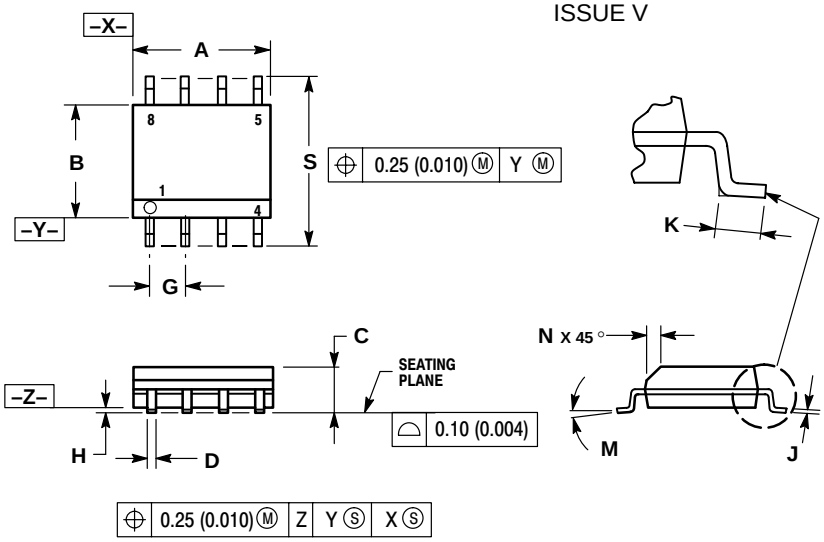

NOTES:
1. DIMENSIONING AND TOLERANCING PER ANSI Y14.5M, 1982.
2. CONTROLLING DIMENSION: MILLIMETER.
3. DIMENSION A AND B DO NOT INCLUDE MOLD PROTRUSION.
4. MAXIMUM MOLD PROTRUSION 0.15 (0.006) PER SIDE.
5. DIMENSION D DOES NOT INCLUDE DAMBAR PROTRUSION. ALLOWABLE DAMBAR PROTRUSION SHALL BE 0.127 (0.005) TOTAL IN EXCESS OF THE D DIMENSION AT MAXIMUM MATERIAL CONDITION.

	MILLIMETERS		INCHES	
DIM	MIN	MAX	MIN	MAX
A	4.80	5.00	0.189	0.197
B	3.80	4.00	0.150	0.157
C	1.35	1.75	0.053	0.069
D	0.33	0.51	0.013	0.020
G	1.27 BSC		0.050 BSC	
H	0.10	0.25	0.004	0.010
J	0.19	0.25	0.007	0.010
K	0.40	1.27	0.016	0.050
M	0 °	8 °	0 °	8 °
N	0.25	0.50	0.010	0.020
S	5.80	6.20	0.228	0.244

PACKAGE DIMENSIONS

TSSOP–8
DT SUFFIX
PLASTIC TSSOP PACKAGE
CASE 948R–02
ISSUE A

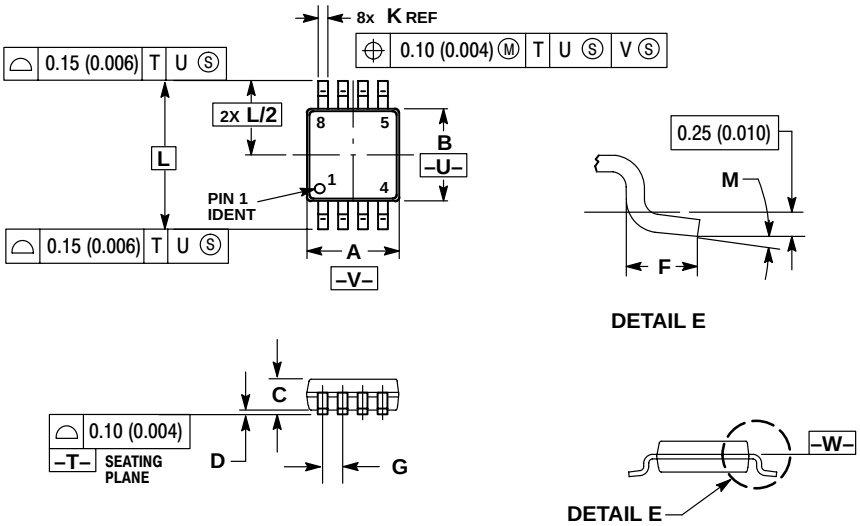

NOTES:
1. DIMENSIONING AND TOLERANCING PER ANSI Y14.5M, 1982.
2. CONTROLLING DIMENSION: MILLIMETER.
3. DIMENSION A DOES NOT INCLUDE MOLD FLASH. PROTRUSIONS OR GATE BURRS. MOLD FLASH OR GATE BURRS SHALL NOT EXCEED 0.15 (0.006) PER SIDE.
4. DIMENSION B DOES NOT INCLUDE INTERLEAD FLASH OR PROTRUSION. INTERLEAD FLASH OR PROTRUSION SHALL NOT EXCEED 0.25 (0.010) PER SIDE.
5. TERMINAL NUMBERS ARE SHOWN FOR REFERENCE ONLY.
6. DIMENSION A AND B ARE TO BE DETERMINED AT DATUM PLANE –W–.

	MILLIMETERS		INCHES	
DIM	MIN	MAX	MIN	MAX
A	2.90	3.10	0.114	0.122
B	2.90	3.10	0.114	0.122
C	0.80	1.10	0.031	0.043
D	0.05	0.15	0.002	0.006
F	0.40	0.70	0.016	0.028
G	0.65 BSC		0.026 BSC	
K	0.25	0.40	0.010	0.016
L	4.90 BSC		0.193 BSC	
M	0°	6°	0°	6°

Notes

ON Semiconductor and are trademarks of Semiconductor Components Industries, LLC (SCILLC). SCILLC reserves the right to make changes without further notice to any products herein. SCILLC makes no warranty, representation or guarantee regarding the suitability of its products for any particular purpose, nor does SCILLC assume any liability arising out of the application or use of any product or circuit, and specifically disclaims any and all liability, including without limitation special, consequential or incidental damages. "Typical" parameters which may be provided in SCILLC data sheets and/or specifications can and do vary in different applications and actual performance may vary over time. All operating parameters, including "Typicals" must be validated for each customer application by customer's technical experts. SCILLC does not convey any license under its patent rights nor the rights of others. SCILLC products are not designed, intended, or authorized for use as components in systems intended for surgical implant into the body, or other applications intended to support or sustain life, or for any other application in which the failure of the SCILLC product could create a situation where personal injury or death may occur. Should Buyer purchase or use SCILLC products for any such unintended or unauthorized application, Buyer shall indemnify and hold SCILLC and its officers, employees, subsidiaries, affiliates, and distributors harmless against all claims, costs, damages, and expenses, and reasonable attorney fees arising out of, directly or indirectly, any claim of personal injury or death associated with such unintended or unauthorized use, even if such claim alleges that SCILLC was negligent regarding the design or manufacture of the part. SCILLC is an Equal Opportunity/Affirmative Action Employer.

PUBLICATION ORDERING INFORMATION

NORTH AMERICA Literature Fulfillment:
Literature Distribution Center for ON Semiconductor
P.O. Box 5163, Denver, Colorado 80217 USA
Phone: 303–675–2175 or 800–344–3860 Toll Free USA/Canada
Fax: 303–675–2176 or 800–344–3867 Toll Free USA/Canada
Email: ONlit@hibbertco.com
Fax Response Line: 303–675–2167 or 800–344–3810 Toll Free USA/Canada

N. American Technical Support: 800–282–9855 Toll Free USA/Canada

EUROPE: LDC for ON Semiconductor – European Support
German Phone: (+1) 303–308–7140 (Mon–Fri 2:30pm to 7:00pm CET)
Email: ONlit–german@hibbertco.com
French Phone: (+1) 303–308–7141 (Mon–Fri 2:00pm to 7:00pm CET)
Email: ONlit–french@hibbertco.com
English Phone: (+1) 303–308–7142 (Mon–Fri 12:00pm to 5:00pm GMT)
Email: ONlit@hibbertco.com

EUROPEAN TOLL–FREE ACCESS*: 00–800–4422–3781
*Available from Germany, France, Italy, UK, Ireland

CENTRAL/SOUTH AMERICA:
Spanish Phone: 303–308–7143 (Mon–Fri 8:00am to 5:00pm MST)
Email: ONlit–spanish@hibbertco.com
Toll–Free from Mexico: Dial 01–800–288–2872 for Access – then Dial 866–297–9322

ASIA/PACIFIC: LDC for ON Semiconductor – Asia Support
Phone: 303–675–2121 (Tue–Fri 9:00am to 1:00pm, Hong Kong Time)
Toll Free from Hong Kong & Singapore:
001–800–4422–3781
Email: ONlit–asia@hibbertco.com

JAPAN: ON Semiconductor, Japan Customer Focus Center
4–32–1 Nishi–Gotanda, Shinagawa–ku, Tokyo, Japan 141–0031
Phone: 81–3–5740–2700
Email: r14525@onsemi.com

ON Semiconductor Website: http://onsemi.com

For additional information, please contact your local Sales Representative.