MC10EP16, MC100EP16

3.3V / 5V ECL Differential Receiver/Driver

The EP16 is a world–class differential receiver/driver. The device is functionally equivalent to the EL16 and LVEL16 devices with higher performance capabilities. With output transition times significantly faster than the EL16 and LVEL16, the EP16 is ideally suited for interfacing with high frequency sources.

The V_{BB} pin, an internally generated voltage supply, is available to this device only. For single-ended input conditions, the unused differential input is connected to V_{BB} as a switching reference voltage. V_{BB} may also rebias AC coupled inputs. When used, decouple V_{BB} and V_{CC} via a 0.01 μF capacitor and limit current sourcing or sinking to 0.5 mA. When not used, V_{BB} should be left open.

Under open input conditions (pulled to V_{EE}) internal input clamps will force the Q output LOW.

The 100 Series contains temperature compensation.

- 220 ps Typical Propagation Delay
- Maximum Frequency > 4 GHz Typical
- PECL Mode Operating Range: V_{CC} = 3.0 V to 5.5 V with V_{EE} = 0 V
- NECL Mode Operating Range: V_{CC} = 0 V with V_{EE} = –3.0 V to –5.5 V
- Open Input Default State
- Safety Clamp on Inputs
- Q Output Will Default LOW with Inputs Open or at V_{EE}
- V_{BB} Output

ON Semiconductor™

http://onsemi.com

MARKING DIAGRAMS*

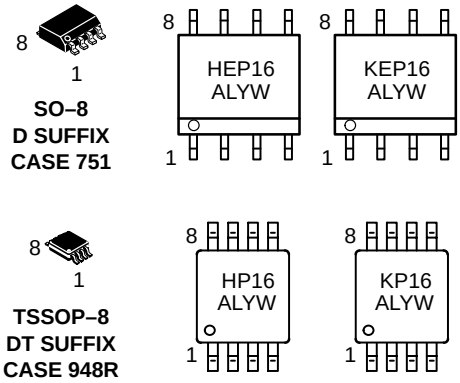

H = MC10
K = MC100
A = Assembly Location
L = Wafer Lot
Y = Year
W = Work Week

*For additional information, see Application Note AND8002/D

ORDERING INFORMATION

Device	Package	Shipping
MC10EP16D	SO–8	98 Units/Rail
MC10EP16DR2	SO–8	2500 Tape & Reel
MC100EP16D	SO–8	98 Units/Rail
MC100EP16DR2	SO–8	2500 Tape & Reel
MC10EP16DT	TSSOP–8	100 Units/Rail
MC10EP16DTR2	TSSOP–8	2500 Tape & Reel
MC100EP16DT	TSSOP–8	100 Units/Rail
MC100EP16DTR2	TSSOP–8	2500 Tape & Reel

© Semiconductor Components Industries, LLC, 2001

April, 2001 – Rev. 3
Publication Order Number:
MC10EP16/D

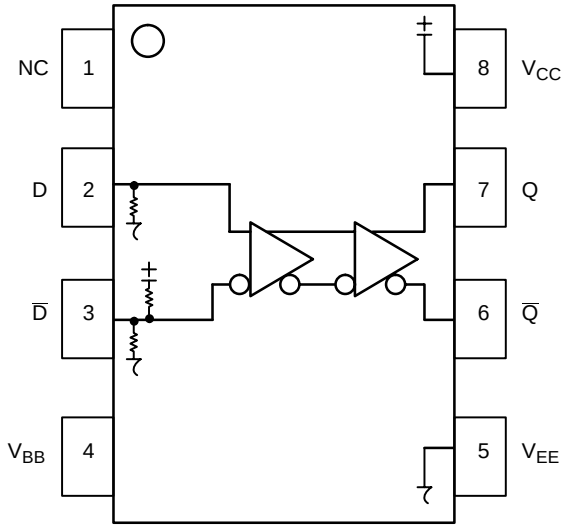

PIN DESCRIPTION

PIN	FUNCTION
D*, $\overline{D}$**	ECL Data Inputs
Q, $\overline{Q}$	ECL Data Outputs
V_{BB}	Reference Voltage Output
V_{CC}	Positive Supply
V_{EE}	Negative Supply
NC	No Connect

* Pins will default LOW when left open.
** Pins will default to $V_{CC}/2$ when left open.

Figure 1. 8–Lead Pinout (Top View) **and Logic Diagram**

ATTRIBUTES

Characteristics		Value
Internal Input Pulldown Resistor		75 kΩ
Internal Input Pullup Resistor		37.5 kΩ
ESD Protection	Human Body Model Machine Model Charged Device Model	> 4 kV > 200 V > 2 kV
Moisture Sensitivity, Indefinite Time Out of Drypack (Note 1.)		Level 1
Flammability Rating Oxygen Index		UL–94 code V–0 A 1/8” 28 to 34
Transistor Count		167
Meets or exceeds JEDEC Spec EIA/JESD78 IC Latchup Test		

1. For additional information, see Application Note AND8003/D.

MAXIMUM RATINGS (Note 2.)

Symbol	Parameter	Condition 1	Condition 2	Rating	Units
V_{CC}	PECL Mode Power Supply	V_{EE} = 0 V		6	V
V_{EE}	NECL Mode Power Supply	V_{CC} = 0 V		–6	V
V_I	PECL Mode Input Voltage NECL Mode Input Voltage	V_{EE} = 0 V V_{CC} = 0 V	$V_I \leq V_{CC}$ $V_I \geq V_{EE}$	6 –6	V V
I_{out}	Output Current	Continuous Surge		50 100	mA mA
I_{BB}	V_{BB} Sink/Source			± 0.5	mA
TA	Operating Temperature Range			–40 to +85	°C
T_{stg}	Storage Temperature Range			–65 to +150	°C
θ_{JA}	Thermal Resistance (Junction to Ambient)	0 LFPM 500 LFPM	8 SOIC 8 SOIC	190 130	°C/W °C/W
θ_{JC}	Thermal Resistance (Junction to Case)	std bd	8 SOIC	41 to 44	°C/W
θ_{JA}	Thermal Resistance (Junction to Ambient)	0 LFPM 500 LFPM	8 TSSOP 8 TSSOP	185 140	°C/W °C/W
θ_{JC}	Thermal Resistance (Junction to Case)	std bd	8 TSSOP	41 to 44	°C/W
T_{sol}	Wave Solder	<2 to 3 sec @ 248°C		265	°C

2. Maximum Ratings are those values beyond which device damage may occur.

10EP DC CHARACTERISTICS, PECL V_{CC} = 3.3 V, V_{EE} = 0 V (Note 3.)

Symbol	Characteristic	–40°C			25°C			85°C			Unit
		Min	Typ	Max	Min	Typ	Max	Min	Typ	Max	
I_{EE}	Power Supply Current	20	24	31	20	24	31	20	24	32	mA
V_{OH}	Output HIGH Voltage (Note 4.)	2165	2290	2415	2230	2355	2480	2290	2415	2540	mV
V_{OL}	Output LOW Voltage (Note 4.)	1365	1490	1615	1430	1555	1680	1490	1615	1740	mV
V_{IH}	Input HIGH Voltage (Single Ended)	2090		2415	2155		2480	2215		2540	mV
V_{IL}	Input LOW Voltage (Single Ended)	1365		1690	1430		1755	1490		1815	mV
V_{BB}	Output Voltage Reference	1790	1890	1990	1855	1955	2055	1915	2015	2115	mV
V_{IHCMR}	Input HIGH Voltage Common Mode Range (Differential) (Note 5.)	2.0		3.3	2.0		3.3	2.0		3.3	V
I_{IH}	Input HIGH Current			150			150			150	μA
I_{IL}	Input LOW Current D $\overline{D}$	0.5 –150			0.5 –150			0.5 –150			μA

NOTE: EP circuits are designed to meet the DC specifications shown in the above table after thermal equilibrium has been established. The circuit is in a test socket or mounted on a printed circuit board and transverse airflow greater than 500 lfpm is maintained.

3. Input and output parameters vary 1:1 with V_{CC}. V_{EE} can vary +0.3 V to –2.2 V.
4. All loading with 50 ohms to V_{CC}–2.0 volts.
5. V_{IHCMR} min varies 1:1 with V_{EE}, V_{IHCMR} max varies 1:1 with V_{CC}. The V_{IHCMR} range is referenced to the most positive side of the differential input signal.

10EP DC CHARACTERISTICS, PECL V_{CC} = 5.0 V, V_{EE} = 0 V (Note 6.)

Symbol	Characteristic	–40°C			25°C			85°C			Unit
		Min	Typ	Max	Min	Typ	Max	Min	Typ	Max	
I_{EE}	Power Supply Current	20	24	31	20	24	31	20	24	32	mA
V_{OH}	Output HIGH Voltage (Note 7.)	3865	3990	4115	3930	4055	4180	3990	4115	4240	mV
V_{OL}	Output LOW Voltage (Note 7.)	3065	3190	3315	3130	3255	3380	3190	3315	3440	mV
V_{IH}	Input HIGH Voltage (Single Ended)	3790		4115	3855		4180	3915		4240	mV
V_{IL}	Input LOW Voltage (Single Ended)	3065		3390	3130		3455	3190		3515	mV
V_{BB}	Output Voltage Reference	3490	3590	3690	3555	3655	3755	3615	3715	3815	mV
V_{IHCMR}	Input HIGH Voltage Common Mode Range (Differential) (Note 8.)	2.0		5.0	2.0		5.0	2.0		5.0	V
I_{IH}	Input HIGH Current			150			150			150	μA
I_{IL}	Input LOW Current D $\overline{D}$	0.5 –150			0.5 –150			0.5 –150			μA

NOTE: EP circuits are designed to meet the DC specifications shown in the above table after thermal equilibrium has been established. The circuit is in a test socket or mounted on a printed circuit board and transverse airflow greater than 500 lfpm is maintained.

6. Input and output parameters vary 1:1 with V_{CC}. V_{EE} can vary +2.0 V to –0.5 V.
7. All loading with 50 ohms to V_{CC}–2.0 volts.
8. V_{IHCMR} min varies 1:1 with V_{EE}, V_{IHCMR} max varies 1:1 with V_{CC}. The V_{IHCMR} range is referenced to the most positive side of the differential input signal.

10EP DC CHARACTERISTICS, NECL V_{CC} = 0 V; V_{EE} = –5.5 V to –3.0 V (Note 9.)

Symbol	Characteristic	–40°C			25°C			85°C			Unit
		Min	Typ	Max	Min	Typ	Max	Min	Typ	Max	
I_{EE}	Power Supply Current	20	24	31	20	24	31	20	24	32	mA
V_{OH}	Output HIGH Voltage (Note 10.)	–1135	–1010	–885	–1070	–945	–820	–1010	–885	–760	mV
V_{OL}	Output LOW Voltage (Note 10.)	–1935	–1810	–1685	–1870	–1745	–1620	–1810	–1685	–1560	mV
V_{IH}	Input HIGH Voltage (Single Ended)	–1210		–885	–1145		–820	–1085		–760	mV
V_{IL}	Input LOW Voltage (Single Ended)	–1935		–1610	–1870		–1545	–1810		–1485	mV
V_{BB}	Output Voltage Reference	–1510	–1410	–1310	–1445	–1345	–1245	–1385	–1285	–1185	mV
V_{IHCMR}	Input HIGH Voltage Common Mode Range (Differential) (Note 11.)	V_{EE}+2.0		0.0	V_{EE}+2.0		0.0	V_{EE}+2.0		0.0	V
I_{IH}	Input HIGH Current			150			150			150	μA
I_{IL}	Input LOW Current D $\overline{D}$	0.5 –150			0.5 –150			0.5 –150			μA

NOTE: EP circuits are designed to meet the DC specifications shown in the above table after thermal equilibrium has been established. The circuit is in a test socket or mounted on a printed circuit board and transverse airflow greater than 500 lfpm is maintained.

9. Input and output parameters vary 1:1 with V_{CC}.
10. All loading with 50 ohms to V_{CC}–2.0 volts.
11. V_{IHCMR} min varies 1:1 with V_{EE}, V_{IHCMR} max varies 1:1 with V_{CC}. The V_{IHCMR} range is referenced to the most positive side of the differential input signal.

100EP DC CHARACTERISTICS, PECL V_{CC} = 3.3 V, V_{EE} = 0 V (Note 12.)

Symbol	Characteristic	–40°C			25°C			85°C			Unit
		Min	Typ	Max	Min	Typ	Max	Min	Typ	Max	
I_{EE}	Power Supply Current	17	25	36	17	25	36	22	26	38	mA
V_{OH}	Output HIGH Voltage (Note 13.)	2155	2280	2405	2155	2280	2405	2155	2280	2405	mV
V_{OL}	Output LOW Voltage (Note 13.)	1355	1480	1605	1355	1480	1605	1355	1480	1605	mV
V_{IH}	Input HIGH Voltage (Single Ended)	2075		2420	2075		2420	2075		2420	mV
V_{IL}	Input LOW Voltage (Single Ended)	1355		1675	1355		1675	1355		1675	mV
V_{BB}	Output Voltage Reference	1775	1875	1975	1775	1875	1975	1775	1875	1975	mV
V_{IHCMR}	Input HIGH Voltage Common Mode Range (Differential) (Note 14.)	2.0		3.3	2.0		3.3	2.0		3.3	V
I_{IH}	Input HIGH Current			150			150			150	μA
I_{IL}	Input LOW Current D $\overline{D}$	0.5 –150			0.5 –150			0.5 –150			μA

NOTE: EP circuits are designed to meet the DC specifications shown in the above table after thermal equilibrium has been established. The circuit is in a test socket or mounted on a printed circuit board and transverse airflow greater than 500 lfpm is maintained.

12. Input and output parameters vary 1:1 with V_{CC}. V_{EE} can vary +0.3 V to –2.2 V.
13. All loading with 50 ohms to V_{CC}–2.0 volts.
14. V_{IHCMR} min varies 1:1 with V_{EE}, V_{IHCMR} max varies 1:1 with V_{CC}. The V_{IHCMR} range is referenced to the most positive side of the differential input signal.

100EP DC CHARACTERISTICS, PECL V_{CC} = 5.0 V, V_{EE} = 0 V (Note 15.)

Symbol	Characteristic	–40°C			25°C			85°C			Unit
		Min	Typ	Max	Min	Typ	Max	Min	Typ	Max	
I_{EE}	Power Supply Current	17	25	36	17	25	36	22	26	38	mA
V_{OH}	Output HIGH Voltage (Note 16.)	3855	3980	4105	3855	3980	4105	3855	3980	4105	mV
V_{OL}	Output LOW Voltage (Note 16.)	3055	3180	3305	3055	3180	3305	3055	3180	3305	mV
V_{IH}	Input HIGH Voltage (Single Ended)	3775		4120	3775		4120	3775		4120	mV
V_{IL}	Input LOW Voltage (Single Ended)	3055		3375	3055		3375	3055		3375	mV
V_{BB}	Output Voltage Reference	3475	3575	3675	3475	3575	3675	3475	3575	3675	mV
V_{IHCMR}	Input HIGH Voltage Common Mode Range (Differential) (Note 17.)	2.0		5.0	2.0		5.0	2.0		5.0	V
I_{IH}	Input HIGH Current			150			150			150	μA
I_{IL}	Input LOW Current D $\overline{D}$	0.5 –150			0.5 –150			0.5 –150			μA

NOTE: EP circuits are designed to meet the DC specifications shown in the above table after thermal equilibrium has been established. The circuit is in a test socket or mounted on a printed circuit board and transverse airflow greater than 500 lfpm is maintained.

15. Input and output parameters vary 1:1 with V_{CC}. V_{EE} can vary +2.0 V to –0.5 V.
16. All loading with 50 ohms to V_{CC}–2.0 volts.
17. V_{IHCMR} min varies 1:1 with V_{EE}, V_{IHCMR} max varies 1:1 with V_{CC}. The V_{IHCMR} range is referenced to the most positive side of the differential input signal.

100EP DC CHARACTERISTICS, NECL V_{CC} = 0 V; V_{EE} = –5.5 V to –3.0 V (Note 18.)

Symbol	Characteristic	–40°C			25°C			85°C			Unit
		Min	Typ	Max	Min	Typ	Max	Min	Typ	Max	
I_{EE}	Power Supply Current	17	25	36	17	25	36	22	26	38	mA
V_{OH}	Output HIGH Voltage (Note 19.)	–1145	–1020	–895	–1145	–1020	–895	–1145	–1020	–895	mV
V_{OL}	Output LOW Voltage (Note 19.)	–1945	–1820	–1695	–1945	–1820	–1695	–1945	–1820	–1695	mV
V_{IH}	Input HIGH Voltage (Single Ended)	–1225		–880	–1225		–880	–1225		–880	mV
V_{IL}	Input LOW Voltage (Single Ended)	–1945		–1625	–1945		–1625	–1945		–1625	mV
V_{BB}	Output Voltage Reference	–1525	–1425	–1325	–1525	–1425	–1325	–1525	–1425	–1325	mV
V_{IHCMR}	Input HIGH Voltage Common Mode Range (Differential) (Note 20.)	V_{EE}+2.0		0.0	V_{EE}+2.0		0.0	V_{EE}+2.0		0.0	V
I_{IH}	Input HIGH Current			150			150			150	μA
I_{IL}	Input LOW Current D $\overline{D}$	0.5 –150			0.5 –150			0.5 –150			μA

NOTE: EP circuits are designed to meet the DC specifications shown in the above table after thermal equilibrium has been established. The circuit is in a test socket or mounted on a printed circuit board and transverse airflow greater than 500 lfpm is maintained.

18. Input and output parameters vary 1:1 with V_{CC}.
19. All loading with 50 ohms to V_{CC}–2.0 volts.
20. V_{IHCMR} min varies 1:1 with V_{EE}, V_{IHCMR} max varies 1:1 with V_{CC}. The V_{IHCMR} range is referenced to the most positive side of the differential input signal.

AC CHARACTERISTICS V_{CC} = 0 V; V_{EE} = –3.0 V to –5.5 V or V_{CC} = 3.0 V to 5.5 V; V_{EE} = 0 V (Note 21.)

Symbol	Characteristic	–40°C			25°C			85°C			Unit
		Min	Typ	Max	Min	Typ	Max	Min	Typ	Max	
f_{max}	Maximum Frequency (See Figure 2. F_{max}/JITTER)		> 4			> 4			> 4		GHz
t_{PLH}, t_{PHL}	Propagation Delay to Output Differential	150	220	280	150	220	280	160	240	300	ps
t_{SKEW}	Duty Cycle Skew (Note 22.)		5.0	20		5.0	20		5.0	20	ps
t_{JITTER}	Cycle–to–Cycle Jitter (See Figure 2. F_{max}/JITTER)		0.2	< 1		0.2	< 1		0.2	< 1	ps
V_{PP}	Input Voltage Swing (Differential)	150	800	1200	150	800	1200	150	800	1200	mV
t_r t_f	Output Rise/Fall Times Q, $\overline{Q}$ (20% – 80%)	70	120	170	80	130	180	100	150	200	ps

21. Measured using a 750 mV source, 50% duty cycle clock source. All loading with 50 ohms to V_{CC}–2.0 V.
22. Skew is measured between outputs under identical transitions. Duty cycle skew is defined only for differential operation when the delays are measured from the cross point of the inputs to the cross point of the outputs.

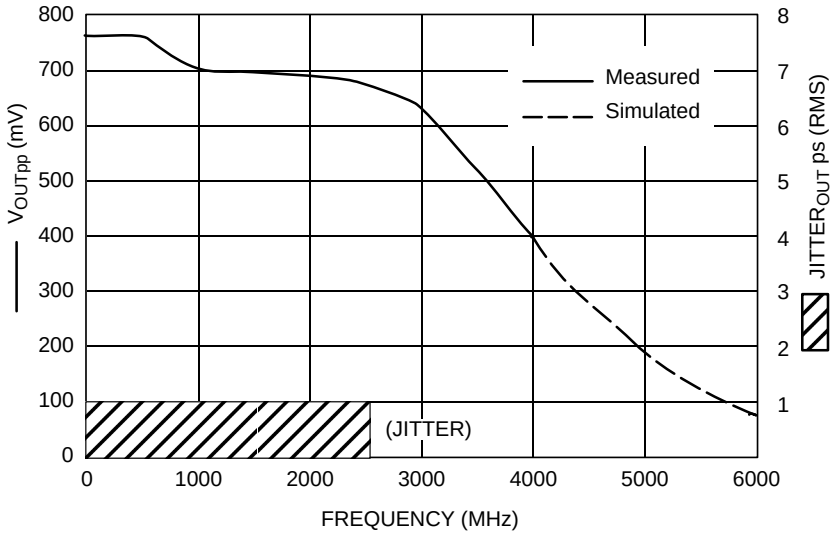

Figure 2. F_{max}/Jitter

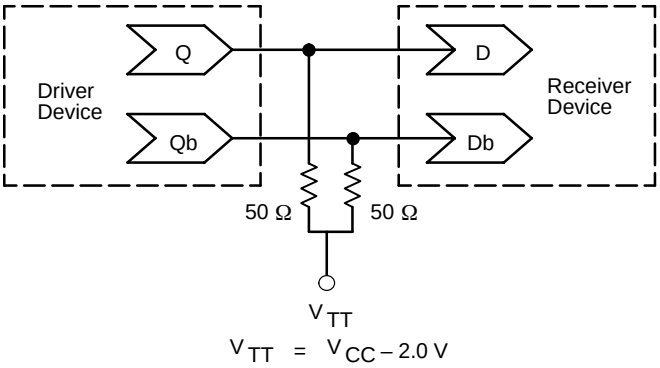

Figure 3. Typical Termination for Output Driver and Device Evaluation (See Application Note AND8020 – Termination of ECL Logic Devices.)

Resource Reference of Application Notes

AN1404	–	ECLinPS Circuit Performance at Non–Standard V_{IH} Levels
AN1405	–	ECL Clock Distribution Techniques
AN1406	–	Designing with PECL (ECL at +5.0 V)
AN1504	–	Metastability and the ECLinPS Family
AN1568	–	Interfacing Between LVDS and ECL
AN1650	–	Using Wire–OR Ties in ECLinPS Designs
AN1672	–	The ECL Translator Guide
AND8001	–	Odd Number Counters Design
AND8002	–	Marking and Date Codes
AND8009	–	ECLinPS Plus Spice I/O Model Kit
AND8020	–	Termination of ECL Logic Devices

For an updated list of Application Notes, please see our website at http://onsemi.com.

PACKAGE DIMENSIONS

SO–8
D SUFFIX
PLASTIC SOIC PACKAGE
CASE 751–07
ISSUE W

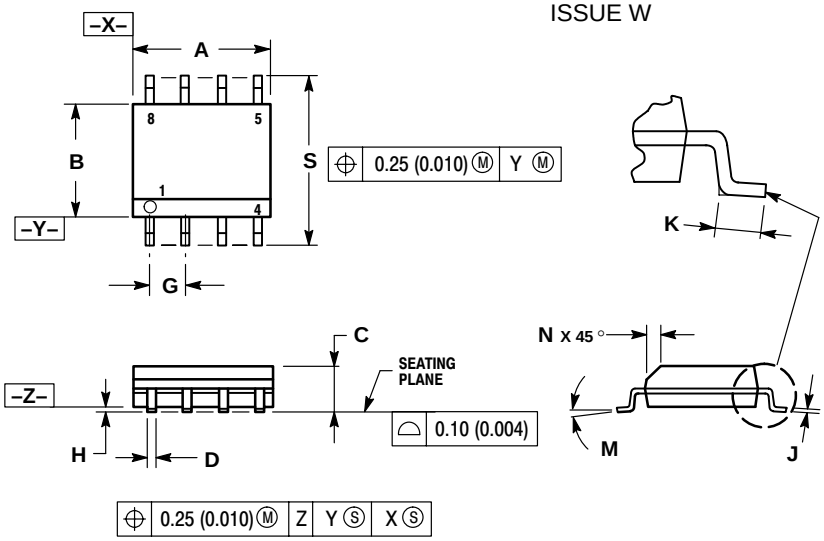

NOTES:
1. DIMENSIONING AND TOLERANCING PER ANSI Y14.5M, 1982.
2. CONTROLLING DIMENSION: MILLIMETER.
3. DIMENSION A AND B DO NOT INCLUDE MOLD PROTRUSION.
4. MAXIMUM MOLD PROTRUSION 0.15 (0.006) PER SIDE.
5. DIMENSION D DOES NOT INCLUDE DAMBAR PROTRUSION. ALLOWABLE DAMBAR PROTRUSION SHALL BE 0.127 (0.005) TOTAL IN EXCESS OF THE D DIMENSION AT MAXIMUM MATERIAL CONDITION.

	MILLIMETERS		INCHES	
DIM	MIN	MAX	MIN	MAX
A	4.80	5.00	0.189	0.197
B	3.80	4.00	0.150	0.157
C	1.35	1.75	0.053	0.069
D	0.33	0.51	0.013	0.020
G	1.27 BSC		0.050 BSC	
H	0.10	0.25	0.004	0.010
J	0.19	0.25	0.007	0.010
K	0.40	1.27	0.016	0.050
M	0 °	8 °	0 °	8 °
N	0.25	0.50	0.010	0.020
S	5.80	6.20	0.228	0.244

TSSOP–8
DT SUFFIX
PLASTIC TSSOP PACKAGE
CASE 948R–02
ISSUE A

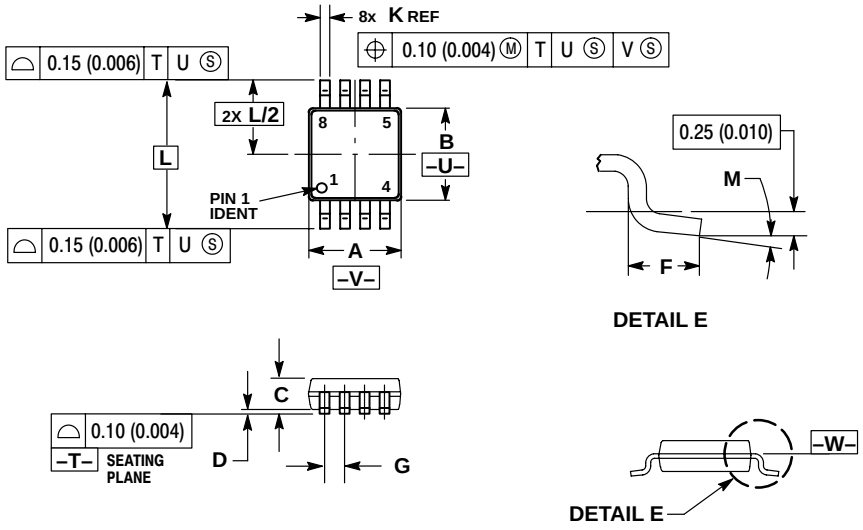

NOTES:
1. DIMENSIONING AND TOLERANCING PER ANSI Y14.5M, 1982.
2. CONTROLLING DIMENSION: MILLIMETER.
3. DIMENSION A DOES NOT INCLUDE MOLD FLASH. PROTRUSIONS OR GATE BURRS. MOLD FLASH OR GATE BURRS SHALL NOT EXCEED 0.15 (0.006) PER SIDE.
4. DIMENSION B DOES NOT INCLUDE INTERLEAD FLASH OR PROTRUSION. INTERLEAD FLASH OR PROTRUSION SHALL NOT EXCEED 0.25 (0.010) PER SIDE.
5. TERMINAL NUMBERS ARE SHOWN FOR REFERENCE ONLY.
6. DIMENSION A AND B ARE TO BE DETERMINED AT DATUM PLANE –W–.

	MILLIMETERS		INCHES	
DIM	MIN	MAX	MIN	MAX
A	2.90	3.10	0.114	0.122
B	2.90	3.10	0.114	0.122
C	0.80	1.10	0.031	0.043
D	0.05	0.15	0.002	0.006
F	0.40	0.70	0.016	0.028
G	0.65 BSC		0.026 BSC	
K	0.25	0.40	0.010	0.016
L	4.90 BSC		0.193 BSC	
M	0 °	6 °	0 °	6 °

ON Semiconductor and are trademarks of Semiconductor Components Industries, LLC (SCILLC). SCILLC reserves the right to make changes without further notice to any products herein. SCILLC makes no warranty, representation or guarantee regarding the suitability of its products for any particular purpose, nor does SCILLC assume any liability arising out of the application or use of any product or circuit, and specifically disclaims any and all liability, including without limitation special, consequential or incidental damages. "Typical" parameters which may be provided in SCILLC data sheets and/or specifications can and do vary in different applications and actual performance may vary over time. All operating parameters, including "Typicals" must be validated for each customer application by customer's technical experts. SCILLC does not convey any license under its patent rights nor the rights of others. SCILLC products are not designed, intended, or authorized for use as components in systems intended for surgical implant into the body, or other applications intended to support or sustain life, or for any other application in which the failure of the SCILLC product could create a situation where personal injury or death may occur. Should Buyer purchase or use SCILLC products for any such unintended or unauthorized application, Buyer shall indemnify and hold SCILLC and its officers, employees, subsidiaries, affiliates, and distributors harmless against all claims, costs, damages, and expenses, and reasonable attorney fees arising out of, directly or indirectly, any claim of personal injury or death associated with such unintended or unauthorized use, even if such claim alleges that SCILLC was negligent regarding the design or manufacture of the part. SCILLC is an Equal Opportunity/Affirmative Action Employer.

PUBLICATION ORDERING INFORMATION

NORTH AMERICA Literature Fulfillment:
Literature Distribution Center for ON Semiconductor
P.O. Box 5163, Denver, Colorado 80217 USA
Phone: 303–675–2175 or 800–344–3860 Toll Free USA/Canada
Fax: 303–675–2176 or 800–344–3867 Toll Free USA/Canada
Email: ONlit@hibbertco.com
Fax Response Line: 303–675–2167 or 800–344–3810 Toll Free USA/Canada

N. American Technical Support: 800–282–9855 Toll Free USA/Canada

EUROPE: LDC for ON Semiconductor – European Support
German Phone: (+1) 303–308–7140 (Mon–Fri 2:30pm to 7:00pm CET)
Email: ONlit–german@hibbertco.com
French Phone: (+1) 303–308–7141 (Mon–Fri 2:00pm to 7:00pm CET)
Email: ONlit–french@hibbertco.com
English Phone: (+1) 303–308–7142 (Mon–Fri 12:00pm to 5:00pm GMT)
Email: ONlit@hibbertco.com

EUROPEAN TOLL–FREE ACCESS*: 00–800–4422–3781
*Available from Germany, France, Italy, UK, Ireland

CENTRAL/SOUTH AMERICA:
Spanish Phone: 303–308–7143 (Mon–Fri 8:00am to 5:00pm MST)
Email: ONlit–spanish@hibbertco.com
Toll–Free from Mexico: Dial 01–800–288–2872 for Access – then Dial 866–297–9322

ASIA/PACIFIC: LDC for ON Semiconductor – Asia Support
Phone: 303–675–2121 (Tue–Fri 9:00am to 1:00pm, Hong Kong Time)
Toll Free from Hong Kong & Singapore:
001–800–4422–3781
Email: ONlit–asia@hibbertco.com

JAPAN: ON Semiconductor, Japan Customer Focus Center
4–32–1 Nishi–Gotanda, Shinagawa–ku, Tokyo, Japan 141–0031
Phone: 81–3–5740–2700
Email: r14525@onsemi.com

ON Semiconductor Website: http://onsemi.com

For additional information, please contact your local Sales Representative.