MC74LCX16373

Low-Voltage CMOS 16-Bit Transparent Latch

With 5 V–Tolerant Inputs and Outputs (3–State, Non–Inverting)

ON Semiconductor™

http://onsemi.com

The MC74LCX16373 is a high performance, non–inverting 16–bit transparent latch operating from a 2.3 to 3.6 V supply. The device is byte controlled. Each byte has separate Output Enable and Latch Enable inputs. These control pins can be tied together for full 16–bit operation. High impedance TTL compatible inputs significantly reduce current loading to input drivers while TTL compatible outputs offer improved switching noise performance. A V_I specification of 5.5 V allows MC74LCX16373 inputs to be safely driven from 5 V devices.

The MC74LCX16373 contains 16 D–type latches with 3–state 5 V–tolerant outputs. When the Latch Enable (LEn) inputs are HIGH, data on the Dn inputs enters the latches. In this condition, the latches are transparent, i.e., a latch output will change state each time its D input changes. When LE is LOW, the latches store the information that was present on the D inputs a setup time preceding the HIGH–to–LOW transition of LE. The 3–state outputs are controlled by the Output Enable (OEn) inputs. When OE is LOW, the outputs are enabled. When OE is HIGH, the standard outputs are in the high impedance state, but this does not interfere with new data entering into the latches.

- Designed for 2.3 to 3.6 V V_{CC} Operation
- 5.4 ns Maximum t_{pd}
- 5 V Tolerant — Interface Capability With 5 V TTL Logic
- Supports Live Insertion and Withdrawal
- I_{OFF} Specification Guarantees High Impedance When V_{CC} = 0 V
- LVTTL Compatible
- LVCMOS Compatible
- 24 mA Balanced Output Sink and Source Capability
- Near Zero Static Supply Current in All Three Logic States (20 μA) Substantially Reduces System Power Requirements
- Latchup Performance Exceeds 500 mA
- ESD Performance: Human Body Model >2000 V; Machine Model >200 V

MARKING DIAGRAM

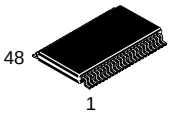

TSSOP–48
DT SUFFIX
CASE 1201–01

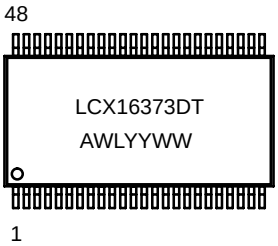

A = Assembly Location
WL = Wafer Lot
YY = Year
WW = Work Week

ORDERING INFORMATION

Device	Package	Shipping
MC74LCX16373DT	TSSOP–48	39 Units/Rail
MC74LCX16373DTR2	TSSOP–48	2500 Units/Reel

December, 2000 – Rev. 2
Publication Order Number:
MC74LCX16373/D

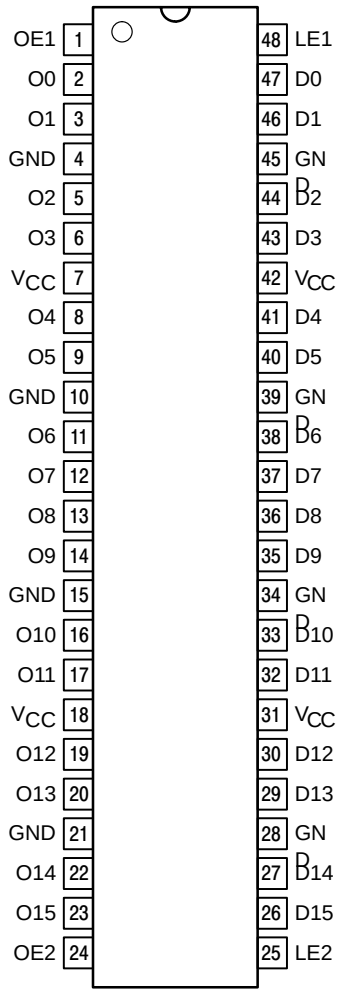

Figure 1. Pinout: 48–Lead
(Top View)

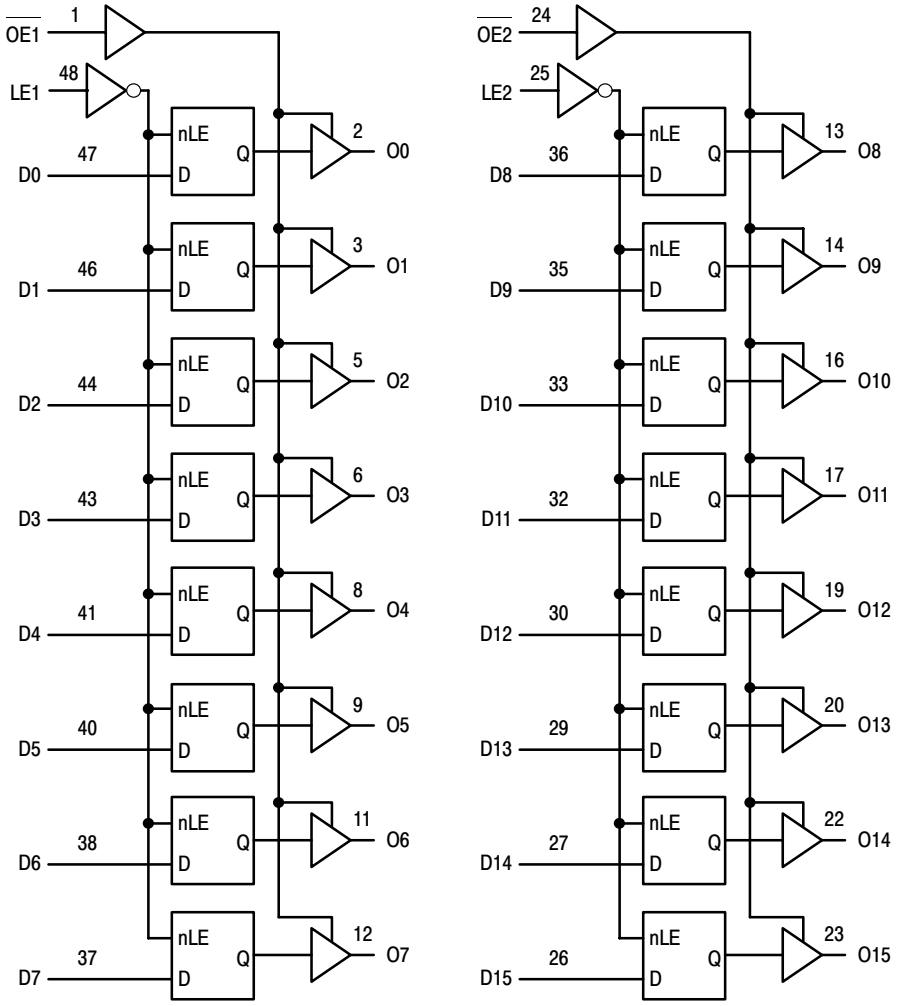

Figure 2. Logic Diagram

PIN NAMES

PINS	FUNCTION
$\overline{\text{OEn}}$	Output Enable Inputs
LEn	Latch Enable Inputs
D0–D15	Inputs
O0–O15	Outputs

TRUTH TABLE

Inputs			Outputs	Inputs			Outputs
LE1	**$\overline{\text{OE1}}$**	**D0:7**	**O0:7**	**LE2**	**$\overline{\text{OE2}}$**	**D8:15**	**O8:15**
X	H	X	Z	X	H	X	Z
H	L	L	L	H	L	L	L
H	L	H	H	H	L	H	H
L	L	X	O0	L	L	X	O0

H = High Voltage Level; L = Low Voltage Level; Z = High Impedance State; X = High or Low Voltage Level and Transitions Are Acceptable, for I_{CC} reasons, DO NOT FLOAT Inputs

ABSOLUTE MAXIMUM RATINGS*

Symbol	Parameter	Value	Condition	Unit
V_{CC}	DC Supply Voltage	–0.5 to +7.0		V
V_I	DC Input Voltage	$-0.5 \le V_I \le +7.0$		V
V_O	DC Output Voltage	$-0.5 \le V_O \le +7.0$	Output in 3–State	V
		$-0.5 \le V_O \le V_{CC} + 0.5$	Output in HIGH or LOW State. (Note 1.)	V
I_{IK}	DC Input Diode Current	–50	V_I < GND	mA
I_{OK}	DC Output Diode Current	–50	V_O < GND	mA
		+50	$V_O > V_{CC}$	mA
I_O	DC Output Source/Sink Current	±50		mA
I_{CC}	DC Supply Current Per Supply Pin	±100		mA
I_{GND}	DC Ground Current Per Ground Pin	±100		mA
T_{STG}	Storage Temperature Range	–65 to +150		°C

* Absolute maximum continuous ratings are those values beyond which damage to the device may occur. Exposure to these conditions or conditions beyond those indicated may adversely affect device reliability. Functional operation under absolute–maximum–rated conditions is not implied.

1. I_O absolute maximum rating must be observed.

RECOMMENDED OPERATING CONDITIONS

Symbol	Parameter		Min	Typ	Max	Unit
V_{CC}	Supply Voltage	Operating Data Retention Only	2.0 1.5	2.5, 3.3 2.5, 3.3	3.6 3.6	V
V_I	Input Voltage		0		5.5	V
V_O	Output Voltage	(HIGH or LOW State) (3–State)	0 0		V_{CC} 5.5	V
I_{OH}	HIGH Level Output Current	V_{CC} = 3.0 V – 3.6 V V_{CC} = 2.7 V – 3.0 V V_{CC} = 2.3 V – 2.7 V			– 24 – 12 – 8	mA
I_{OL}	LOW Level Output Current	V_{CC} = 3.0 V – 3.6 V V_{CC} = 2.7 V – 3.0 V V_{CC} = 2.3 V – 2.7 V			+ 24 + 12 + 8	mA
T_A	Operating Free–Air Temperature		–40		+85	°C
$\Delta t/\Delta V$	Input Transition Rise or Fall Rate, V_{IN} from 0.8 V to 2.0 V, V_{CC} = 3.0 V		0		10	ns/V

DC ELECTRICAL CHARACTERISTICS

Symbol	Characteristic	Condition	T_A = –40°C to +85°C Min	Max	Unit
V_{IH}	HIGH Level Input Voltage (Note 2.)	2.3 V ≤ V_{CC} ≤ 2.7 V	1.7		V
		2.7 V ≤ V_{CC} ≤ 3.6 V	2.0		
V_{IL}	LOW Level Input Voltage (Note 2.)	2.3 V ≤ V_{CC} ≤ 2.7 V		0.7	V
		2.7 V ≤ V_{CC} ≤ 3.6 V		0.8	
V_{OH}	HIGH Level Output Voltage	2.3 V ≤ V_{CC} ≤ 3.6 V; I_{OL} = 100 μA	V_{CC} – 0.2		V
		V_{CC} = 2.3 V; I_{OH} = –8 mA	1.8		
		V_{CC} = 2.7 V; I_{OH} = –12 mA	2.2		
		V_{CC} = 3.0 V; I_{OH} = –18 mA	2.4		
		V_{CC} = 3.0 V; I_{OH} = –24 mA	2.2		
V_{OL}	LOW Level Output Voltage	2.3 V ≤ V_{CC} ≤ 3.6 V; I_{OL} = 100 μA		0.2	V
		V_{CC} = 2.3 V; I_{OL}= 8 mA		0.6	
		V_{CC} = 2.7 V; I_{OL}= 12 mA		0.4	
		V_{CC} = 3.0 V; I_{OL} = 16 mA		0.4	
		V_{CC} = 3.0 V; I_{OL} = 24 mA		0.55	
I_I	Input Leakage Current	2.3 V ≤ V_{CC} ≤ 3.6 V; 0 V ≤ V_I ≤ 5.5 V		±5.0	μA
I_{OZ}	3–State Output Current	2.3 ≤ V_{CC} ≤ 3.6 V; 0V ≤ V_O ≤ 5.5 V; V_I = V_{IH} or V_{IL}		±5.0	μA
I_{OFF}	Power–Off Leakage Current	V_{CC} = 0 V; V_I or V_O = 5.5 V		10	μA
I_{CC}	Quiescent Supply Current	2.3 ≤ V_{CC} ≤ 3.6 V; V_I = GND or V_{CC}		20	μA
I_{CC}	Quiescent Supply Current	2.3 ≤ V_{CC} ≤ 3.6 V; 3.6 ≤ V_I or V_O ≤ 5.5 V		±20	μA
ΔI_{CC}	Increase in I_{CC} per Input	2.3 ≤ V_{CC} ≤ 3.6 V; V_{IH} = V_{CC} – 0.6 V		500	μA

2. These values of V_I are used to test DC electrical characteristics only.

AC CHARACTERISTICS t_R = t_F = 2.5 ns; C_L = 50 pF; R_L = 500 Ω

Symbol	Parameter	Waveform	Limits: T_A = –40°C to +85°C, V_{CC} = 3.3 V ± 0.3 V, C_L = 50 pF Min	Max	V_{CC} = 2.7 V, C_L = 50 pF Min	Max	V_{CC} = 2.5 V ± 0.2 V, C_L = 30 pF Min	Max	Unit
t_{PLH} t_{PHL}	Propagation Delay D_n to O_n	1	1.5 1.5	5.4 5.4	1.5 1.5	5.9 5.9	1.5 1.5	6.5 6.5	ns
t_{PLH} t_{PHL}	Propagation Delay LE to O_n	3	1.5 1.5	5.5 5.5	1.5 1.5	6.4 6.4	1.5 1.5	6.6 6.6	ns
t_{PZH} t_{PZL}	Output Enable Time to High and Low Level	2	1.5 1.5	6.1 6.1	1.5 1.5	6.5 6.5	1.5 1.5	7.9 7.9	ns
t_{PHZ} t_{PLZ}	Output Disable Time From High and Low Level	2	1.5 1.5	6.0 6.0	1.5 1.5	6.3 6.3	1.5 1.5	7.2 7.2	ns
t_s	Setup Time, HIGH or LOW D^n to LE	3	2.5		2.5		3.0		ns
t_h	Hold Time, HIGH or LOW D^n to LE	3	1.5		1.5		2.0		ns
t_w	LE Pulse Width, HIGH	3	3.0		3.0		3.5		ns
t_{OSHL} t_{OSLH}	Output–to–Output Skew (Note 3.)			1.0 1.0					ns

3. Skew is defined as the absolute value of the difference between the actual propagation delay for any two separate outputs of the same device. The specification applies to any outputs switching in the same direction, either HIGH–to–LOW (t_{OSHL}) or LOW–to–HIGH (t_{OSLH}); parameter guaranteed by design.

DYNAMIC SWITCHING CHARACTERISTICS

Symbol	Characteristic	Condition	T_A = +25°C Min	Typ	Max	Unit
V_{OLP}	Dynamic LOW Peak Voltage (Note 4.)	V_{CC} = 3.3 V, C_L = 50 pF, V_{IH} = 3.3 V, V_{IL} = 0 V V_{CC} =2.5 V, C_L = 30 pF, V_{IH} = 2.5 V, V_{IL} = 0 V		0.8 0.6		V V
V_{OLV}	Dynamic LOW Valley Voltage (Note 4.)	V_{CC} = 3.3 V, C_L = 50 pF, V_{IH} = 3.3 V, V_{IL} = 0 V V_{CC} =2.5 V, C_L = 30 pF, V_{IH} = 2.5 V, V_{IL} = 0 V		–0.8 –0.6		V V

4. Number of outputs defined as “n”. Measured with “n–1” outputs switching from HIGH–to–LOW or LOW–to–HIGH. The remaining output is measured in the LOW state.

CAPACITIVE CHARACTERISTICS

Symbol	Parameter	Condition	Typical	Unit
C_{IN}	Input Capacitance	V_{CC} = 3.3 V, V_I = 0 V or V_{CC}	7	pF
C_{OUT}	Output Capacitance	V_{CC} = 3.3 V, V_I = 0 V or V_{CC}	8	pF
C_{PD}	Power Dissipation Capacitance	10 MHz, V_{CC} = 3.3 V, V_I = 0 V or V_{CC}	20	pF

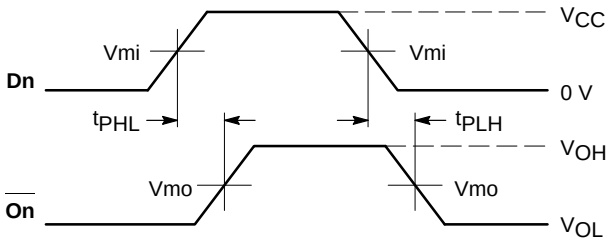

WAVEFORM 1 – PROPAGATION DELAYS
$t_R = t_F$ = 2.5 ns, 10% to 90%; f = 1 MHz; t_W = 500 ns

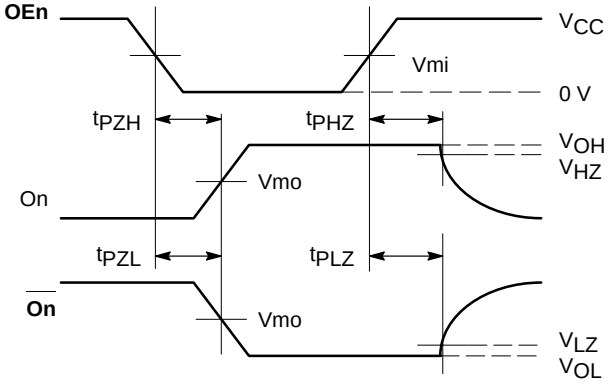

WAVEFORM 2 – OUTPUT ENABLE AND DISABLE TIMES
$t_R = t_F$ = 2.5 ns, 10% to 90%; f = 1 MHz; t_W = 500 ns

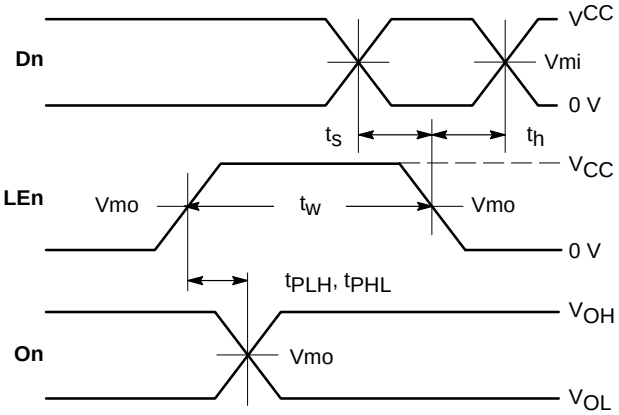

WAVEFORM 3 – LE to On PROPAGATION DELAYS, LE MINIMUM PULSE WIDTH, Dn to LE SETUP AND HOLD TIMES
$t_R = t_F$ = 2.5ns, 10% to 90%; f = 1MHz; t_W = 500ns except when noted

Symbol	V_{CC} 3.3 V ± 0.3 V	2.7 V	2.5 V ± 0.2 V
Vmi	1.5 V	1.5 V	$V_{CC}/2$
Vmo	1.5 V	1.5 V	$V_{CC}/2$
V_{HZ}	V_{OL} + 0.3 V	V_{OL} + 0.3 V	V_{OL} + 0.15 V
V_{LZ}	V_{OL} – 0.3 V	V_{OL} – 0.3 V	V_{OL} – 0.15 V

Figure 3. AC Waveforms

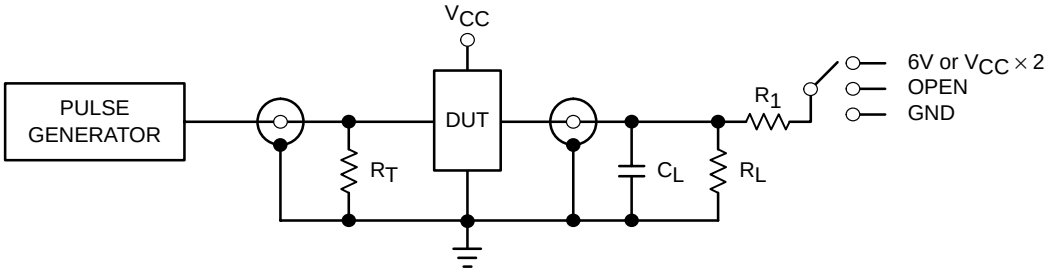

TEST	SWITCH
t_{PLH}, t_{PHL}	Open
t_{PZL}, t_{PLZ}	6V at V_{CC} = 3.3 ±0.3 V 6V at V_{CC} = 2.5 ±0.2 V
Open Collector/Drain t_{PLH} and t_{PHL}	6V
t_{PZH}, t_{PHZ}	GND

C_L = 50 pF at V_{CC} = 3.3 ±0.3 V or equivalent (includes jig and probe capacitance)
C_L = 30 pF at V_{CC} = 2.5 ±0.2 V or equivalent (includes jig and probe capacitance)
R_L = R_1 = 500 Ω or equivalent
R_T = Z_{OUT} of pulse generator (typically 50 Ω)

Figure 4. Test Circuit

PACKAGE DIMENSIONS

TSSOP–48
DT SUFFIX
CASE 1201–01
ISSUE A

SCALE 2:1

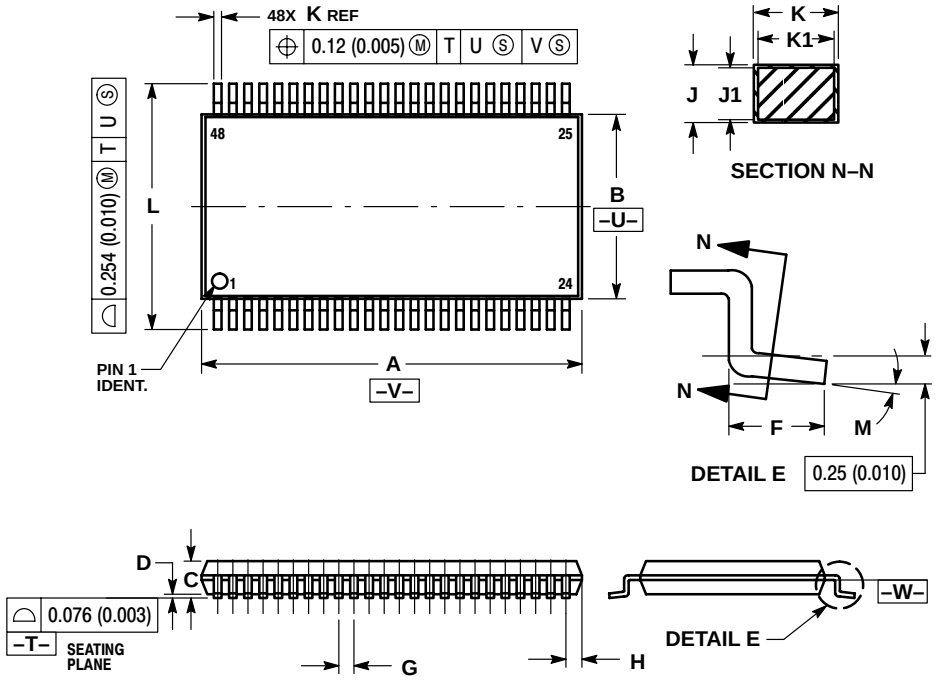

NOTES:
1. DIMENSIONING AND TOLERANCING PER ANSI Y14.5M, 1982.
2. CONTROLLING DIMENSION: MILLIMETER.
3. DIMENSIONS A AND B DO NOT INCLUDE MOLD FLASH, PROTRUSIONS OR GATE BURRS. MOLD FLASH OR GATE BURRS SHALL NOT EXCEED 0.15 (0.006) PER SIDE.
4. DIMENSION K DOES NOT INCLUDE DAMBAR PROTRUSION. ALLOWABLE DAMBAR PROTRUSION SHALL BE 0.08 (0.003) TOTAL IN EXCESS OF THE K DIMENSION AT MAXIMUM MATERIAL CONDITION.
5. TERMINAL NUMBERS ARE SHOWN FOR REFERENCE ONLY.
6. DIMENSIONS A AND B ARE TO BE DETERMINED AT DATUM PLANE –W–.

	MILLIMETERS		INCHES	
DIM	MIN	MAX	MIN	MAX
A	12.40	12.60	0.488	0.496
B	6.00	6.20	0.236	0.244
C	---	1.10	---	0.043
D	0.05	0.15	0.002	0.006
F	0.50	0.75	0.020	0.030
G	0.50 BSC		0.0197 BSC	
H	0.37	---	0.015	---
J	0.09	0.20	0.004	0.008
J1	0.09	0.16	0.004	0.006
K	0.17	0.27	0.007	0.011
K1	0.17	0.23	0.007	0.009
L	7.95	8.25	0.313	0.325
M	0 °	8 °	0 °	8 °

PUBLICATION ORDERING INFORMATION

NORTH AMERICA Literature Fulfillment:
Literature Distribution Center for ON Semiconductor
P.O. Box 5163, Denver, Colorado 80217 USA
Phone: 303–675–2175 or 800–344–3860 Toll Free USA/Canada
Fax: 303–675–2176 or 800–344–3867 Toll Free USA/Canada
Email: ONlit@hibbertco.com
Fax Response Line: 303–675–2167 or 800–344–3810 Toll Free USA/Canada

N. American Technical Support: 800–282–9855 Toll Free USA/Canada

EUROPE: LDC for ON Semiconductor – European Support
German Phone: (+1) 303–308–7140 (Mon–Fri 2:30pm to 7:00pm CET)
Email: ONlit–german@hibbertco.com
French Phone: (+1) 303–308–7141 (Mon–Fri 2:00pm to 7:00pm CET)
Email: ONlit–french@hibbertco.com
English Phone: (+1) 303–308–7142 (Mon–Fri 12:00pm to 5:00pm GMT)
Email: ONlit@hibbertco.com

EUROPEAN TOLL–FREE ACCESS*: 00–800–4422–3781
*Available from Germany, France, Italy, UK, Ireland

CENTRAL/SOUTH AMERICA:
Spanish Phone: 303–308–7143 (Mon–Fri 8:00am to 5:00pm MST)
Email: ONlit–spanish@hibbertco.com
Toll–Free from Mexico: Dial 01–800–288–2872 for Access – then Dial 866–297–9322

ASIA/PACIFIC: LDC for ON Semiconductor – Asia Support
Phone: 303–675–2121 (Tue–Fri 9:00am to 1:00pm, Hong Kong Time)
Toll Free from Hong Kong & Singapore:
001–800–4422–3781
Email: ONlit–asia@hibbertco.com

JAPAN: ON Semiconductor, Japan Customer Focus Center
4–32–1 Nishi–Gotanda, Shinagawa–ku, Tokyo, Japan 141–0031
Phone: 81–3–5740–2700
Email: r14525@onsemi.com

ON Semiconductor Website: http://onsemi.com

For additional information, please contact your local Sales Representative.