BUT11AF

FULL PAK™
High Voltage NPN Power Transistor
For Isolated Package Applications

POWER TRANSISTOR
5.0 AMPERES
450 VOLTS
40 WATTS

The BUT11AF was designed for use in line operated switching power supplies in a wide range of end use applications. This device combines the latest state of the art bipolar fabrication techniques to provide excellent switching, high voltage capability and low saturation voltage.

- 1000 Volt V_{CES} Rating
- Low Base Drive Requirements
- Isolated Overmold Package
- Improved System Efficiency
- No Isolating Washers Required
- Reduced System Cost
- High Isolation Voltage Capability (4500 V_{RMS})

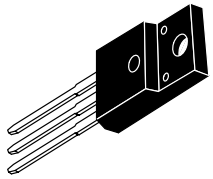

CASE 221D–02
TO–220 TYPE

MAXIMUM RATINGS

Rating		Symbol	Value	Unit
Collector–Emitter Sustaining Voltage		$V_{CEO(sus)}$	450	Vdc
Collector–Emitter Breakdown Voltage		V_{CES}	1000	Vdc
Emitter–Base Voltage		V_{EBO}	9.0	Vdc
RMS Isolation Voltage (For 1 sec, T_A = 25°C, Rel. Humidity < 30%)	Per Figure 7	V_{ISOL1}	4500	V
	Per Figure 8	V_{ISOL2}	3500	
	Per Figure 9	V_{ISOL3}	2500	
Collector Current — Continuous — Pulsed (1)		I_C I_{CM}	5.0 10	Adc
Base Current — Continuous — Pulsed (1)		I_B I_{BM}	2.0 4.0	Adc
Total Power Dissipation @ T_C = 25°C* Derated above 25°C		P_D	40 0.32	Watts W/°C
Operating and Storage Temperature Range		T_J, T_{stg}	– 65 to +150	°C

THERMAL CHARACTERISTICS

Thermal Resistance — Junction to Case*	$R_{\theta JC}$	3.125	°C/W
Maximum Lead Temperature for soldering purposes 1/8″ from case for 5 sec.	T_L	260	°C

(1) Pulse Test: Pulse Width = 5.0 ms, Duty Cycle ≤ 10%.

*Measurement made with thermocouple contacting the bottom insulated mounting surface of the package (in a location beneath the die), the device mounted on a heatsink, thermal grease applied, and a mounting torque of 6 to 8 in · lbs.

March, 2001 – Rev. 4
Publication Order Number:
BUT11AF/D

ELECTRICAL CHARACTERISTICS (T_C = 25°C unless otherwise noted)

Characteristic	Symbol	Min	Typ	Max	Unit
OFF CHARACTERISTICS (1)					
Collector-Emitter Sustaining Voltage (Figures 1 & 2) (I_C = 100 mAdc, I_B = 0, L = 25 μH)	$V_{CEO(sus)}$	450	–	–	Vdc
Collector Cutoff Current (V_{CE} = 1000 Vdc, V_{BE} = 0) (V_{CE} = 1000 Vdc, V_{BE} = 0, T_J = 125°C)	I_{CES}	 – –	 – –	 1.0 2.0	mAdc
Emitter-Base Leakage (V_{EB} = 9.0 Vdc, I_C = 0)	I_{EBO}	–	–	10	mAdc
ON CHARACTERISTICS (1)					
Collector-Emitter Saturation Voltage (I_C = 2.5 Adc, I_B = 0.5 Adc)	$V_{CE(sat)}$	–	–	1.5	Vdc
Base-Emitter Saturation Voltage (I_C = 2.5 Adc, I_B = 0.5 Adc)	$V_{BE(sat)}$	–	–	1.5	Vdc
DC Current Gain (I_C = 5.0 mAdc, V_{CE} = 5.0 Vdc)	h_{FE}	10	– –	– –	–
DYNAMIC CHARACTERISTICS					
Insulation Capacitance (Collector to External Heatsink)	Cc-hs	–	15	–	pF

SWITCHING CHARACTERISTICS

Inductive Load (Figures 3 & 4)							
Storage	I_C = 2.5 Adc, I_{B1} = 0.5 Adc	T_J = 25°C	t_s	–	1100	1400	ns
Fall Time			t_{fi}	–	80	150	
Storage		T_J = 100°C	t_s	–	1200	1500	
Fall Time			t_{fi}	–	140	300	
Resistive Load (Figures 5 & 6)							
Turn-On Time	I_C = 2.5 Adc, I_{B1} = I_{B2} = 0.5 Adc		t_{on}	–	–	1000	ns
Storage Time			t_s	–	–	4000	
Fall Time			t_f	–	–	800	

(1) Pulse Test: Pulse Width = 300 μs, Duty Cycle ≤ 2.0%.

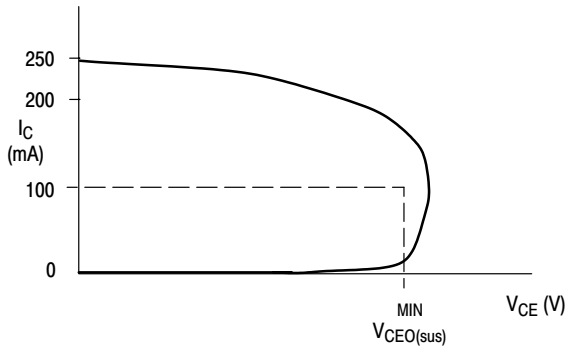

Figure 1. Oscilloscope Display for Sustaining Voltage

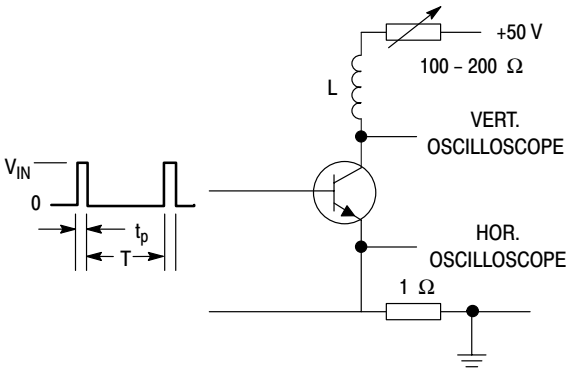

Figure 2. Test Circuit for $V_{CEO(sus)}$

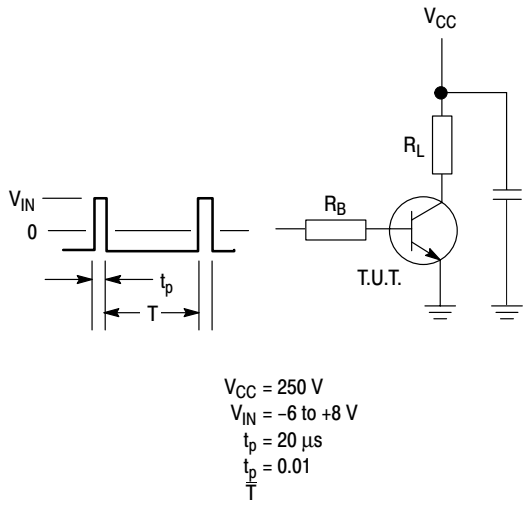

Figure 3. Test Circuit Resistive Load

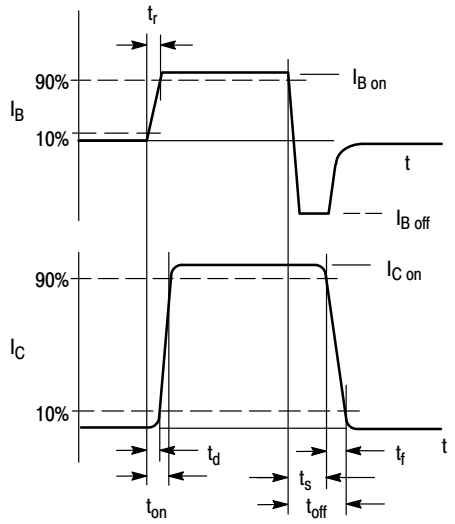

Figure 4. Switching Times Waveforms with Resistive Load

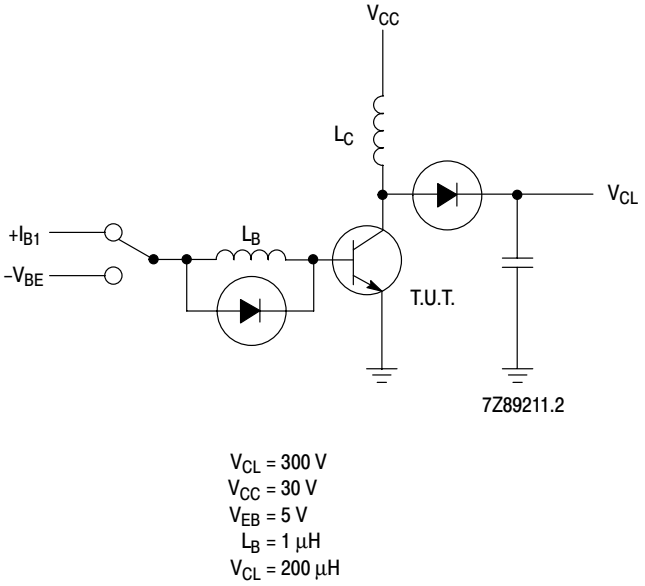

Figure 5. Test Circuit Inductive Load

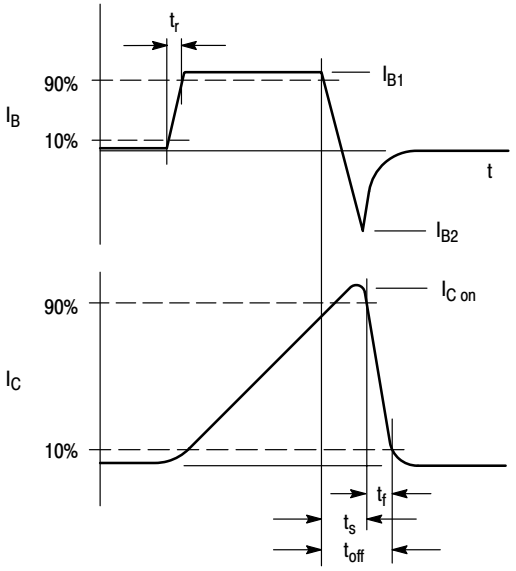

Figure 6. Switching Times Waveforms with Inductive Load

TEST CONDITIONS FOR ISOLATION TESTS*

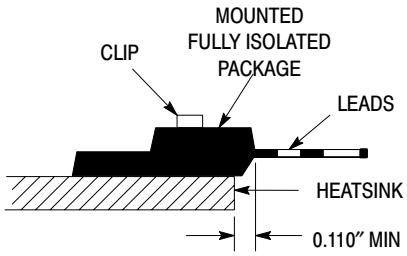

Figure 7. Screw or Clip Mounting Position for Isolation Test Number 1

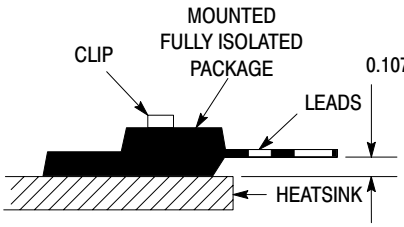

Figure 8. Clip Mounting Position for Isolation Test Number 2

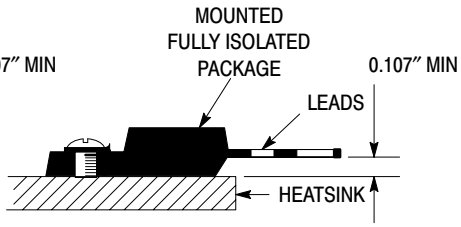

Figure 9. Screw Mounting Position for Isolation Test Number 3

*Measurement made between leads and heatsink with all leads shorted together.

MOUNTING INFORMATION

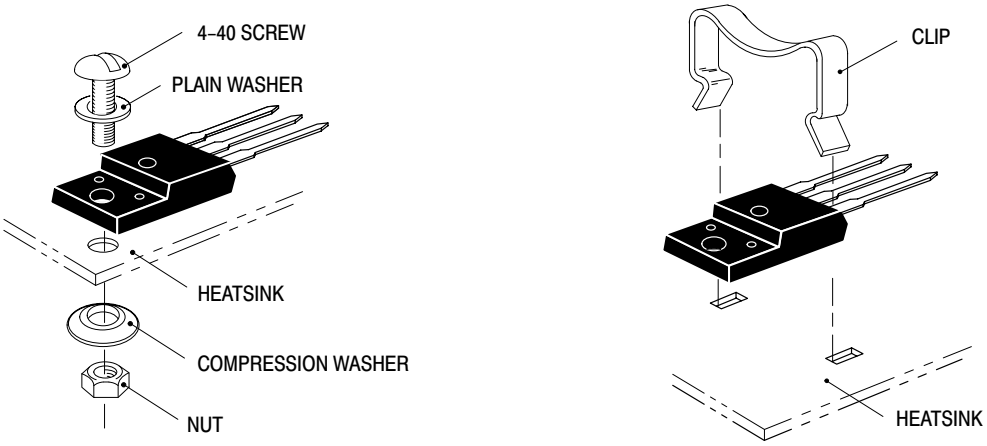

Figure 10. Typical Mounting Techniques for Isolated Package

Laboratory tests on a limited number of samples indicate, when using the screw and compression washer mounting technique, a screw torque of 6 to 8 in · lbs is sufficient to provide maximum power dissipation capability. The compression washer helps to maintain a constant pressure on the package over time and during large temperature excursions.

Destructive laboratory tests show that using a hex head 4–40 screw, without washers, and applying a torque in excess of 20 in · lbs will cause the plastic to crack around the mounting hole, resulting in a loss of isolation capability.

Additional tests on slotted 4–40 screws indicate that the screw slot fails between 15 to 20 in · lbs without adversely affecting the package. However, in order to positively ensure the package integrity of the fully isolated device, ON Semiconductor does not recommend exceeding 10 in · lbs of mounting torque under any mounting conditions.

PACKAGE DIMENSIONS

TO−220 FULLPAK
CASE 221D−02
ISSUE D

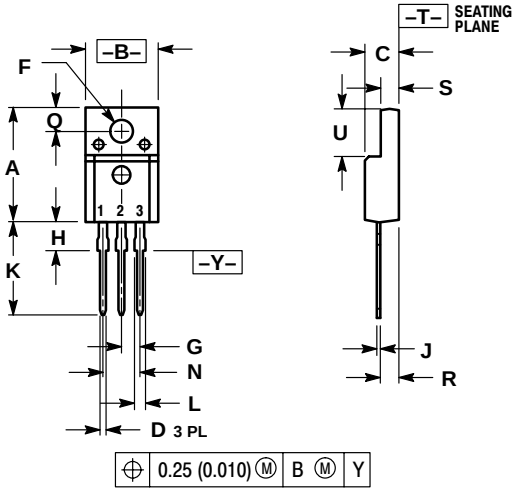

NOTES:
1. DIMENSIONING AND TOLERANCING PER ANSI Y14.5M, 1982.
2. CONTROLLING DIMENSION: INCH.

	INCHES		MILLIMETERS	
DIM	MIN	MAX	MIN	MAX
A	0.621	0.629	15.78	15.97
B	0.394	0.402	10.01	10.21
C	0.181	0.189	4.60	4.80
D	0.026	0.034	0.67	0.86
F	0.121	0.129	3.08	3.27
G	0.100 BSC		2.54 BSC	
H	0.123	0.129	3.13	3.27
J	0.018	0.025	0.46	0.64
K	0.500	0.562	12.70	14.27
L	0.045	0.060	1.14	1.52
N	0.200 BSC		5.08 BSC	
Q	0.126	0.134	3.21	3.40
R	0.107	0.111	2.72	2.81
S	0.096	0.104	2.44	2.64
U	0.259	0.267	6.58	6.78

Notes

Notes

PUBLICATION ORDERING INFORMATION

NORTH AMERICA Literature Fulfillment:
Literature Distribution Center for ON Semiconductor
P.O. Box 5163, Denver, Colorado 80217 USA
Phone: 303–675–2175 or 800–344–3860 Toll Free USA/Canada
Fax: 303–675–2176 or 800–344–3867 Toll Free USA/Canada
Email: ONlit@hibbertco.com
Fax Response Line: 303–675–2167 or 800–344–3810 Toll Free USA/Canada

N. American Technical Support: 800–282–9855 Toll Free USA/Canada

EUROPE: LDC for ON Semiconductor – European Support
German Phone: (+1) 303–308–7140 (Mon–Fri 2:30pm to 7:00pm CET)
Email: ONlit–german@hibbertco.com
French Phone: (+1) 303–308–7141 (Mon–Fri 2:00pm to 7:00pm CET)
Email: ONlit–french@hibbertco.com
English Phone: (+1) 303–308–7142 (Mon–Fri 12:00pm to 5:00pm GMT)
Email: ONlit@hibbertco.com

EUROPEAN TOLL–FREE ACCESS*: 00–800–4422–3781
*Available from Germany, France, Italy, UK, Ireland

CENTRAL/SOUTH AMERICA:
Spanish Phone: 303–308–7143 (Mon–Fri 8:00am to 5:00pm MST)
Email: ONlit–spanish@hibbertco.com
Toll–Free from Mexico: Dial 01–800–288–2872 for Access – then Dial 866–297–9322

ASIA/PACIFIC: LDC for ON Semiconductor – Asia Support
Phone: 1–303–675–2121 (Tue–Fri 9:00am to 1:00pm, Hong Kong Time)
Toll Free from Hong Kong & Singapore:
001–800–4422–3781
Email: ONlit–asia@hibbertco.com

JAPAN: ON Semiconductor, Japan Customer Focus Center
4–32–1 Nishi–Gotanda, Shinagawa–ku, Tokyo, Japan 141–0031
Phone: 81–3–5740–2700
Email: r14525@onsemi.com

ON Semiconductor Website: http://onsemi.com

For additional information, please contact your local Sales Representative.