SN74LS195A

Universal 4-Bit Shift Register

The SN74LS195A is a high speed 4-Bit Shift Register offering typical shift frequencies of 39 MHz. It is useful for a wide variety of register and counting applications. It utilizes the Schottky diode clamped process to achieve high speeds and is fully compatible with all ON Semiconductor TTL products.

- Typical Shift Right Frequency of 39 MHz
- Asynchronous Master Reset
- J, $\overline{K}$ Inputs to First Stage
- Fully Synchronous Serial or Parallel Data Transfers
- Input Clamp Diodes Limit High Speed Termination Effects

GUARANTEED OPERATING RANGES

Symbol	Parameter	Min	Typ	Max	Unit
V_{CC}	Supply Voltage	4.75	5.0	5.25	V
T_A	Operating Ambient Temperature Range	0	25	70	°C
I_{OH}	Output Current – High			–0.4	mA
I_{OL}	Output Current – Low			8.0	mA

ON Semiconductor™

http://onsemi.com

LOW POWER SCHOTTKY

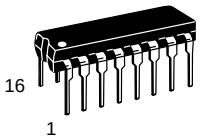

PLASTIC N SUFFIX CASE 648

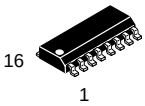

SOIC D SUFFIX CASE 751B

ORDERING INFORMATION

Device	Package	Shipping
SN74LS195AN	16 Pin DIP	2000 Units/Box
SN74LS195AD	SOIC–16	38 Units/Rail
SN74LS195ADR2	SOIC–16	2500/Tape & Reel

October, 2001 – Rev. 7

Publication Order Number:
SN74LS195A/D

CONNECTION DIAGRAM DIP (TOP VIEW)

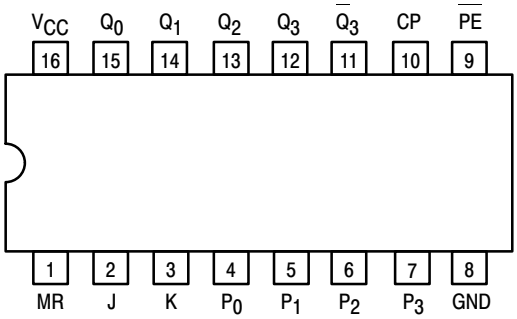

NOTE:
The Flatpak version has the same pinouts (Connection Diagram) as the Dual In-Line Package.

PIN NAMES		LOADING (Note a) HIGH	LOW
$\overline{PE}$	Parallel Enable (Active LOW) Input	0.5 U.L.	0.25 U.L.
P_0 – P_3	Parallel Data Inputs	0.5 U.L.	0.25 U.L.
J	First Stage J (Active HIGH) Input	0.5 U.L.	0.25 U.L.
K	First Stage K (Active LOW) Input	0.5 U.L.	0.25 U.L.
CP	Clock (Active HIGH Going Edge) Input	0.5 U.L.	0.25 U.L.
MR	Master Reset (Active LOW) Input	0.5 U.L.	0.25 U.L.
Q_0 – Q_3	Parallel Outputs	10 U.L.	5 U.L.
Q_3	Complementary Last Stage Output	10 U.L.	5 U.L.

NOTES:
a) 1 TTL Unit Load (U.L.) = 40 μA HIGH/1.6 mA LOW.

LOGIC SYMBOL

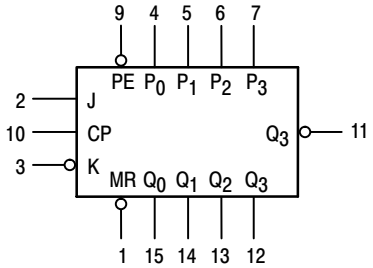

V_{CC} = PIN 16
GND = PIN 8

LOGIC DIAGRAM

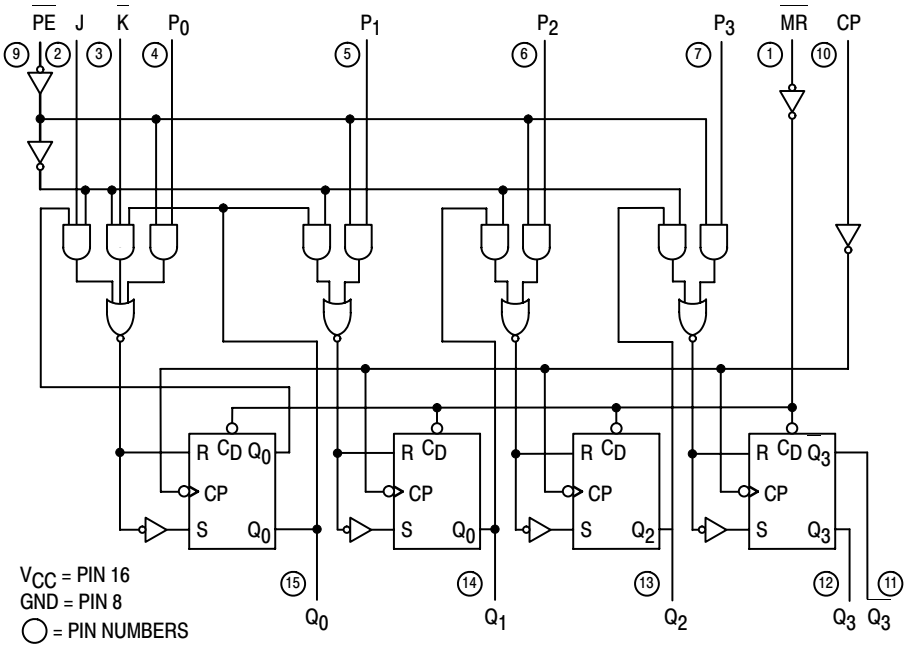

FUNCTIONAL DESCRIPTION

The Logic Diagram and Truth Table indicate the functional characteristics of the LS195A 4-Bit Shift Register. The device is useful in a wide variety of shifting, counting and storage applications. It performs serial, parallel, serial to parallel, or parallel to serial data transfers at very high speeds.

The LS195A has two primary modes of operation, shift right ($Q_0 \rightarrow Q_1$) and parallel load which are controlled by the state of the Parallel Enable (PE) input. When the PE input is HIGH, serial data enters the first flip-flop Q_0 via the J and K inputs and is shifted one bit in the direction $Q_0 \rightarrow Q_1 \rightarrow Q_2 \rightarrow Q_3$ following each LOW to HIGH clock transition. The JK inputs provide the flexibility of the JK type input for special applications, and the simple D type input for general applications by tying the two pins together. When the PE input is LOW, the LS195A appears as four common clocked D flip-flops. The data on the parallel inputs P_0, P_1, P_2, P_3 is transferred to the respective Q_0, Q_1, Q_2, Q_3 outputs following the LOW to HIGH clock transition. Shift left operations ($Q_3 \rightarrow Q_2$) can be achieved by tying the Q_n Outputs to the P_{n-1} inputs and holding the PE input LOW.

All serial and parallel data transfers are synchronous, occurring after each LOW to HIGH clock transition. Since the LS195A utilizes edge-triggering, there is no restriction on the activity of the J, K, P_n and PE inputs for logic operation — except for the set-up and release time requirements.

A LOW on the asynchronous Master Reset ($\overline{MR}$) input sets all Q outputs LOW, independent of any other input condition.

MODE SELECT — TRUTH TABLE

OPERATING MODES	INPUTS					OUTPUTS				
	MR	PE	J	K	P_n	Q_0	Q_1	Q_2	Q_3	$\overline{Q_3}$
Asynchronous Reset	L	X	X	X	X	L	L	L	L	H
Shift, Set First Stage	H	h	h	h	X	H	q_0	q_1	q_2	$\overline{q_2}$
Shift, Reset First	H	h	l	l	X	L	q_0	q_1	q_2	$\overline{q_2}$
Shift, Toggle First Stage	H	h	h	l	X	q_0	q_0	q_1	q_2	$\overline{q_2}$
Shift, Retain First Stage	H	h	l	h	X	q_0	q_0	q_1	q_2	$\overline{q_2}$
Parallel Load	H	l	X	X	p_n	p_0	p_1	p_2	p_3	$\overline{p_3}$

L = LOW voltage levels
H = HIGH voltage levels
X = Don't Care
l = LOW voltage level one set-up time prior to the LOW to HIGH clock transition.
h = HIGH voltage level one set-up time prior to the LOW to HIGH clock transition.
p_n (q_n) = Lower case letters indicate the state of the referenced input (or output) one set-up time prior to the LOW to HIGH clock transition.

DC CHARACTERISTICS OVER OPERATING TEMPERATURE RANGE (unless otherwise specified)

Symbol	Parameter	Limits Min	Limits Typ	Limits Max	Unit	Test Conditions	
V_{IH}	Input HIGH Voltage	2.0			V	Guaranteed Input HIGH Voltage for All Inputs	
V_{IL}	Input LOW Voltage			0.8	V	Guaranteed Input LOW Voltage for All Inputs	
V_{IK}	Input Clamp Diode Voltage		–0.65	–1.5	V	V_{CC} = MIN, I_{IN} = –18 mA	
V_{OH}	Output HIGH Voltage	2.7	3.5		V	V_{CC} = MIN, I_{OH} = MAX, V_{IN} = V_{IH} or V_{IL} per Truth Table	
V_{OL}	Output LOW Voltage		0.25	0.4	V	I_{OL} = 4.0 mA	V_{CC} = V_{CC} MIN, V_{IN} = V_{IL} or V_{IH} per Truth Table
			0.35	0.5	V	I_{OL} = 8.0 mA	
I_{IH}	Input HIGH Current			20	μA	V_{CC} = MAX, V_{IN} = 2.7 V	
				0.1	mA	V_{CC} = MAX, V_{IN} = 7.0 V	
I_{IL}	Input LOW Current			–0.4	mA	V_{CC} = MAX, V_{IN} = 0.4 V	
I_{OS}	Short Circuit Current (Note 1)	–20		–100	mA	V_{CC} = MAX	
I_{CC}	Power Supply Current			21	mA	V_{CC} = MAX	

Note 1: Not more than one output should be shorted at a time, nor for more than 1 second.

AC CHARACTERISTICS (T_A = 25°C)

Symbol	Parameter	Limits Min	Limits Typ	Limits Max	Unit	Test Conditions
f_{MAX}	Maximum Clock Frequency	30	39		MHz	V_{CC} = 5.0 V C_L = 15 pF
t_{PLH} t_{PHL}	Propagation Delay, Clock to Output		14 17	22 26	ns	
t_{PHL}	Propagation Delay, $\overline{MR}$ to Output		19	30	ns	

AC SETUP REQUIREMENTS (T_A = 25°C)

Symbol	Parameter	Limits Min	Limits Typ	Limits Max	Unit	Test Conditions
t_W	CP Clock Pulse Width	16			ns	V_{CC} = 5.0 V
t_W	$\overline{MR}$ Pulse Width	12			ns	
t_s	$\overline{PE}$ Setup Time	25			ns	
t_s	Data Setup Time	15			ns	
t_{rec}	Recovery Time	25			ns	
t_{rel}	$\overline{PE}$ Release Time			10	ns	
t_h	Data Hold Time	0			ns	

DEFINITIONS OF TERMS

SETUP TIME(t_S) —is defined as the minimum time required for the correct logic level to be present at the logic input prior to the clock transition from LOW to HIGH in order to be recognized and transferred to the outputs.

HOLD TIME (t_h) — is defined as the minimum time following the clock transition from LOW to HIGH that the logic level must be maintained at the input in order to ensure continued recognition. A negative HOLD TIME indicates that the correct logic level may be released prior to the clock transition from LOW to HIGH and still be recognized.

RECOVERY TIME (t_{rec}) — is defined as the minimum time required between the end of the reset pulse and the clock transition from LOW to HIGH in order to recognize and transfer HIGH Data to the Q outputs.

AC WAVEFORMS

The shaded areas indicate when the input is permitted to change for predictable output performance.

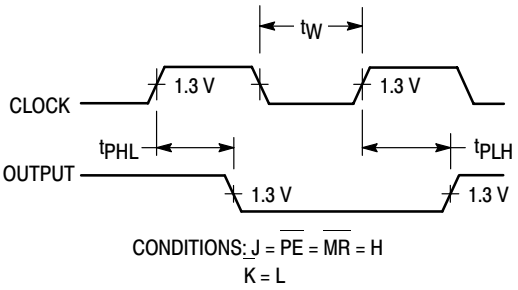

Figure 1. Clock to Output Delays and Clock Pulse Width

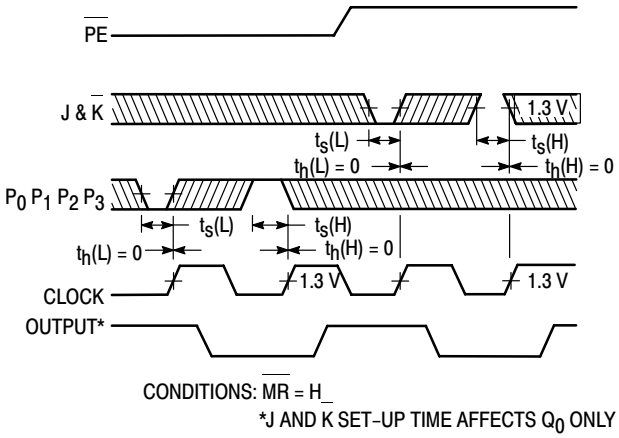

Figure 3. Setup (t_S) and Hold (t_h) Time for Serial Data (J & K) and Parallel Data (P_0, P_1, P_2, P_3)

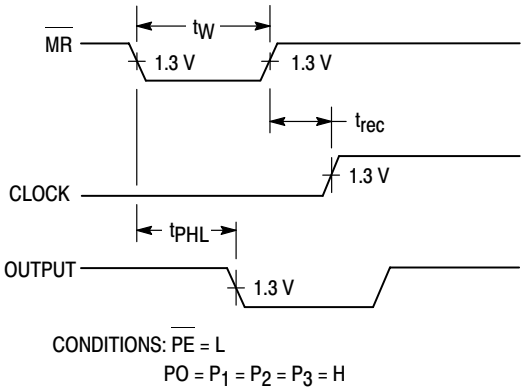

Figure 2. Master Reset Pulse Width, Master Reset to Output Delay and Master Reset to Clock Recovery Time

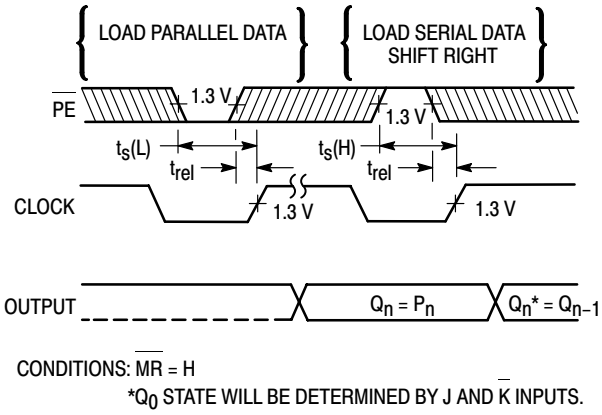

Figure 4. Setup (t_S) and Hold (t_h) Time for PE Input

PACKAGE DIMENSIONS

N SUFFIX
PLASTIC PACKAGE
CASE 648–08
ISSUE R

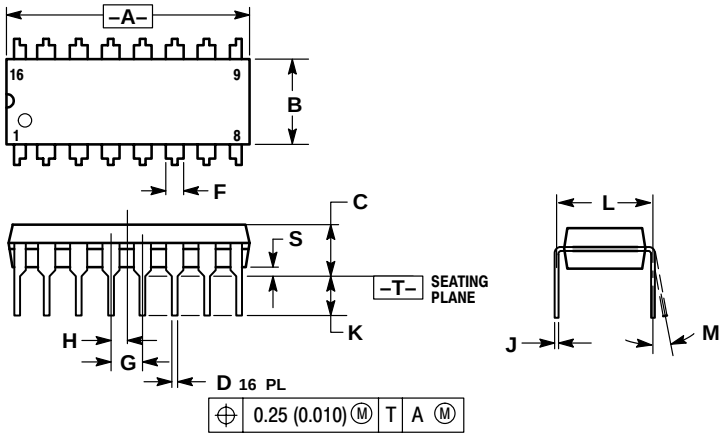

NOTES:
1. DIMENSIONING AND TOLERANCING PER ANSI Y14.5M, 1982.
2. CONTROLLING DIMENSION: INCH.
3. DIMENSION L TO CENTER OF LEADS WHEN FORMED PARALLEL.
4. DIMENSION B DOES NOT INCLUDE MOLD FLASH.
5. ROUNDED CORNERS OPTIONAL.

	INCHES		MILLIMETERS	
DIM	MIN	MAX	MIN	MAX
A	0.740	0.770	18.80	19.55
B	0.250	0.270	6.35	6.85
C	0.145	0.175	3.69	4.44
D	0.015	0.021	0.39	0.53
F	0.040	0.70	1.02	1.77
G	0.100 BSC		2.54 BSC	
H	0.050 BSC		1.27 BSC	
J	0.008	0.015	0.21	0.38
K	0.110	0.130	2.80	3.30
L	0.295	0.305	7.50	7.74
M	0°	10°	0°	10°
S	0.020	0.040	0.51	1.01

D SUFFIX
PLASTIC SOIC PACKAGE
CASE 751B–05
ISSUE J

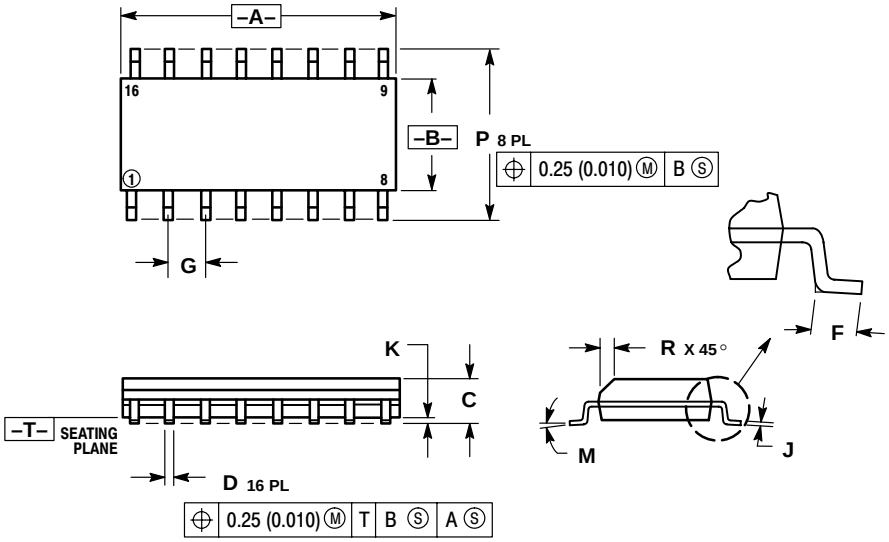

NOTES:
1. DIMENSIONING AND TOLERANCING PER ANSI Y14.5M, 1982.
2. CONTROLLING DIMENSION: MILLIMETER.
3. DIMENSIONS A AND B DO NOT INCLUDE MOLD PROTRUSION.
4. MAXIMUM MOLD PROTRUSION 0.15 (0.006) PER SIDE.
5. DIMENSION D DOES NOT INCLUDE DAMBAR PROTRUSION. ALLOWABLE DAMBAR PROTRUSION SHALL BE 0.127 (0.005) TOTAL IN EXCESS OF THE D DIMENSION AT MAXIMUM MATERIAL CONDITION.

	MILLIMETERS		INCHES	
DIM	MIN	MAX	MIN	MAX
A	9.80	10.00	0.386	0.393
B	3.80	4.00	0.150	0.157
C	1.35	1.75	0.054	0.068
D	0.35	0.49	0.014	0.019
F	0.40	1.25	0.016	0.049
G	1.27 BSC		0.050 BSC	
J	0.19	0.25	0.008	0.009
K	0.10	0.25	0.004	0.009
M	0°	7°	0°	7°
P	5.80	6.20	0.229	0.244
R	0.25	0.50	0.010	0.019

PUBLICATION ORDERING INFORMATION

Literature Fulfillment:
Literature Distribution Center for ON Semiconductor
P.O. Box 5163, Denver, Colorado 80217 USA
Phone: 303–675–2175 or 800–344–3860 Toll Free USA/Canada
Fax: 303–675–2176 or 800–344–3867 Toll Free USA/Canada
Email: ONlit@hibbertco.com

N. American Technical Support: 800–282–9855 Toll Free USA/Canada

JAPAN: ON Semiconductor, Japan Customer Focus Center
4–32–1 Nishi–Gotanda, Shinagawa–ku, Tokyo, Japan 141–0031
Phone: 81–3–5740–2700
Email: r14525@onsemi.com

ON Semiconductor Website: http://onsemi.com

For additional information, please contact your local
Sales Representative.