74VCX16240

Low-Voltage 1.8/2.5/3.3V 16-Bit Buffer

With 3.6 V–Tolerant Inputs and Outputs (3–State, Inverting)

The 74VCX16240 is an advanced performance, inverting 16–bit buffer. It is designed for very high–speed, very low–power operation in 1.8 V, 2.5 V or 3.3 V systems.

When operating at 2.5 V (or 1.8 V) the part is designed to tolerate voltages it may encounter on either inputs or outputs when interfacing to 3.3 V busses. It is guaranteed to be over–voltage tolerant to 3.6 V.

The 74VCX16240 is nibble controlled with each nibble functioning identically, but independently. The control pins may be tied together to obtain full 16–bit operation. The 3–state outputs are controlled by an Output Enable ($\overline{\text{OEn}}$) input for each nibble. When $\overline{\text{OEn}}$ is LOW, the outputs are on. When $\overline{\text{OEn}}$ is HIGH, the outputs are in the high impedance state.

- Designed for Low Voltage Operation: V_{CC} = 1.65–3.6 V
- 3.6V Tolerant Inputs and Outputs
- High Speed Operation: 2.5 ns max for 3.0 to 3.6 V
  3.0 ns max for 2.3 to 2.7 V
  6.0 ns max for 1.65 to 1.95 V
- Static Drive: ±24 mA Drive at 3.0 V
  ±18 mA Drive at 2.3 V
  ±6 mA Drive at 1.65 V
- Supports Live Insertion and Withdrawal
- I_{OFF} Specification Guarantees High Impedance When V_{CC} = 0 V
- Near Zero Static Supply Current in All Three Logic States (20 μA) Substantially Reduces System Power Requirements
- Latchup Performance Exceeds ±250 mA @ 125°C
- ESD Performance: Human Body Model >2000 V; Machine Model >200 V

ON Semiconductor

http://onsemi.com

MARKING DIAGRAM

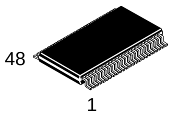

TSSOP–48
DT SUFFIX
CASE 1201

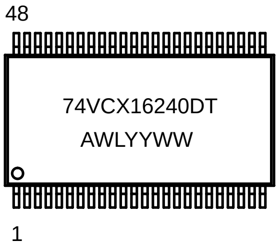

A = Assembly Location
WL = Wafer Lot
YY = Year
WW = Work Week

ORDERING INFORMATION

Device	Package	Shipping
74VCX16240DT	TSSOP	39 / Rail
74VCX16240DTR	TSSOP	2500 / Reel

© Semiconductor Components Industries, LLC, 2001

January, 2001 – Rev. 1

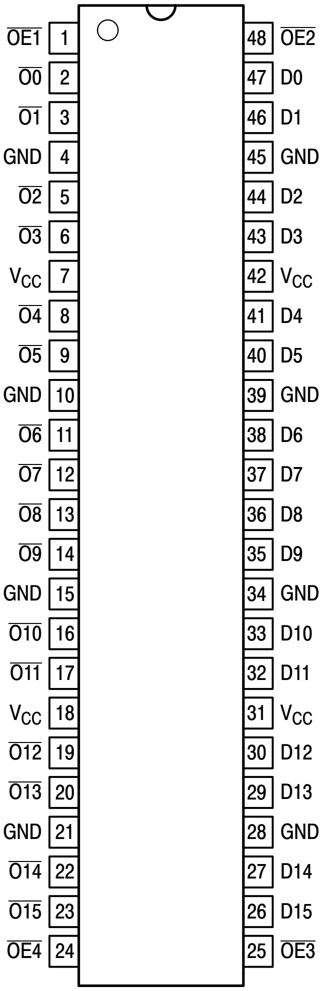
OE1 1
O0 2
O1 3
GND 4
O2 5
O3 6
VCC 7
O4 8
O5 9
GND 10
O6 11
O7 12
O8 13
O9 14
GND 15
O10 16
O11 17
VCC 18
O12 19
O13 20
GND 21
O14 22
O15 23
OE4 24
48 OE2
47 D0
46 D1
45 GND
44 D2
43 D3
42 VCC
41 D4
40 D5
39 GND
38 D6
37 D7
36 D8
35 D9
34 GND
33 D10
32 D11
31 VCC
30 D12
29 D13
28 GND
27 D14
26 D15
25 OE3

Figure 1. 48–Lead Pinout
(Top View)

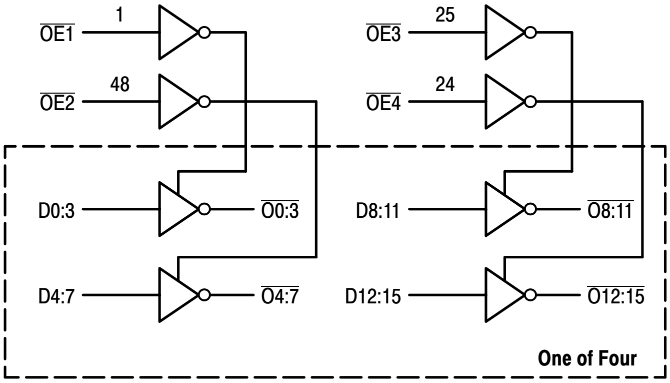
OE1
1
OE2
48
OE3
25
OE4
24
D0:3
O0:3
D4:7
O4:7
D8:11
O8:11
D12:15
O12:15
One of Four

Figure 2. Logic Diagram

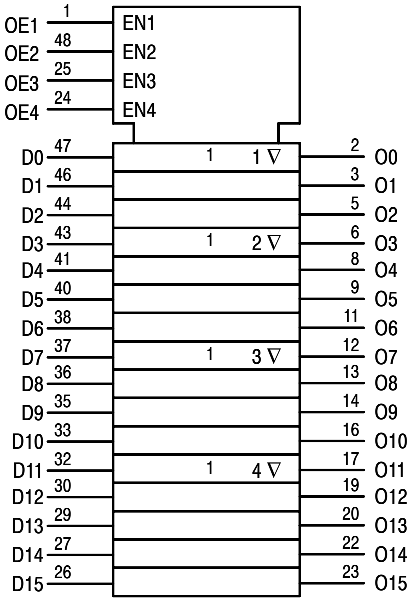
OE1 1
OE2 48
OE3 25
OE4 24
EN1
EN2
EN3
EN4
D0 47
D1 46
D2 44
D3 43
D4 41
D5 40
D6 38
D7 37
D8 36
D9 35
D10 33
D11 32
D12 30
D13 29
D14 27
D15 26
1
1 ∇
1
2 ∇
1
3 ∇
1
4 ∇
2 O0
3 O1
5 O2
6 O3
8 O4
9 O5
11 O6
12 O7
13 O8
14 O9
16 O10
17 O11
19 O12
20 O13
22 O14
23 O15

Figure 3. IEC Logic Diagram

PIN NAMES

Pins	Function
$\overline{OEn}$ D0–D15 O0–O15	Output Enable Inputs Inputs Outputs

$\overline{OE1}$	D0:3	$\overline{O0:3}$	$\overline{OE2}$	D4:7	$\overline{O4:7}$	$\overline{OE3}$	D8:11	$\overline{O8:11}$	$\overline{OE4}$	D12:15	$\overline{O12:15}$
L	L	H	L	L	H	L	L	H	L	L	H
L	H	L	L	H	L	L	H	L	L	H	L
H	X	Z	H	X	Z	H	X	Z	H	X	Z

H = High Voltage Level; L = Low Voltage Level; Z = High Impedance State; X = High or Low Voltage Level and Transitions Are Acceptable, for I_{CC} reasons, DO NOT FLOAT Inputs

ABSOLUTE MAXIMUM RATINGS*

Symbol	Parameter	Value	Condition	Unit
V_{CC}	DC Supply Voltage	–0.5 to +4.6		V
V_I	DC Input Voltage	$-0.5 \le V_I \le +4.6$		V
V_O	DC Output Voltage	$-0.5 \le V_O \le +4.6$	Output in 3–State	V
		$-0.5 \le V_O \le V_{CC} + 0.5$	Note 1.; Outputs Active	V
I_{IK}	DC Input Diode Current	–50	V_I < GND	mA
I_{OK}	DC Output Diode Current	–50	V_O < GND	mA
		+50	$V_O > V_{CC}$	mA
I_O	DC Output Source/Sink Current	±50		mA
I_{CC}	DC Supply Current Per Supply Pin	±100		mA
I_{GND}	DC Ground Current Per Ground Pin	±100		mA
T_{STG}	Storage Temperature Range	–65 to +150		°C

* Absolute maximum continuous ratings are those values beyond which damage to the device may occur. Exposure to these conditions or conditions beyond those indicated may adversely affect device reliability. Functional operation under absolute–maximum–rated conditions is not implied.

1. I_O absolute maximum rating must be observed.

RECOMMENDED OPERATING CONDITIONS

Symbol	Parameter	Min	Typ	Max	Unit
V_{CC}	Supply Voltage Operating Data Retention Only	1.65 1.2	3.3 3.3	3.6 3.6	V
V_I	Input Voltage	–0.3		3.6	V
V_O	Output Voltage (Active State) (3–State)	0 0		V_{CC} 3.6	V
I_{OH}	HIGH Level Output Current, V_{CC} = 3.0V – 3.6V			–24	mA
I_{OL}	LOW Level Output Current, V_{CC} = 3.0V – 3.6V			24	mA
I_{OH}	HIGH Level Output Current, V_{CC} = 2.3V – 2.7V			–18	mA
I_{OL}	LOW Level Output Current, V_{CC} = 2.3V – 2.7V			18	mA
I_{OH}	HIGH Level Output Current, V_{CC} = 1.65 – 1.95V			–6	mA
I_{OL}	LOW Level Output Current, V_{CC} = 1.65 – 1.95V			6	mA
T_A	Operating Free–Air Temperature	–40		+85	°C
$\Delta t/\Delta V$	Input Transition Rise or Fall Rate, V_{IN} from 0.8V to 2.0V, V_{CC} = 3.0V	0		10	ns/V

DC ELECTRICAL CHARACTERISTICS

Symbol	Characteristic	Condition	$T_A = -40°C$ to $+85°C$		Unit
			Min	Max	
V_{IH}	HIGH Level Input Voltage (Note 2.)	$1.65V \le V_{CC} < 2.3V$	$0.65 \times V_{CC}$		V
		$2.3V \le V_{CC} \le 2.7V$	1.6		
		$2.7V < V_{CC} \le 3.6V$	2.0		
V_{IL}	LOW Level Input Voltage (Note 2.)	$1.65V \le V_{CC} < 2.3V$		$0.35 \times V_{CC}$	V
		$2.3V \le V_{CC} \le 2.7V$		0.7	
		$2.7V < V_{CC} \le 3.6V$		0.8	
V_{OH}	HIGH Level Output Voltage	$1.65V \le V_{CC} \le 3.6V$; $I_{OH} = -100\mu A$	$V_{CC} - 0.2$		V
		$V_{CC} = 1.65V$; $I_{OH} = -6mA$	1.25		
		$V_{CC} = 2.3V$; $I_{OH} = -6mA$	2.0		
		$V_{CC} = 2.3V$; $I_{OH} = -12mA$	1.8		
		$V_{CC} = 2.3V$; $I_{OH} = -18mA$	1.7		
		$V_{CC} = 2.7V$; $I_{OH} = -12mA$	2.2		
		$V_{CC} = 3.0V$; $I_{OH} = -18mA$	2.4		
		$V_{CC} = 3.0V$; $I_{OH} = -24mA$	2.2		
V_{OL}	LOW Level Output Voltage	$1.65V \le V_{CC} \le 3.6V$; $I_{OL} = 100\mu A$		0.2	V
		$V_{CC} = 1.65V$; $I_{OL} = 6mA$		0.3	
		$V_{CC} = 2.3V$; $I_{OL} = 12mA$		0.4	
		$V_{CC} = 2.3V$; $I_{OL} = 18mA$		0.6	
		$V_{CC} = 2.7V$; $I_{OL} = 12mA$		0.4	
		$V_{CC} = 3.0V$; $I_{OL} = 18mA$		0.4	
		$V_{CC} = 3.0V$; $I_{OL} = 24mA$		0.55	
I_I	Input Leakage Current	$1.65V \le V_{CC} \le 3.6V$; $0V \le V_I \le 3.6V$		±5.0	µA
I_{OZ}	3–State Output Current	$1.65V \le V_{CC} \le 3.6V$; $0V \le V_O \le 3.6V$; $V_I = V_{IH}$ or V_{IL}		±10	µA
I_{OFF}	Power–Off Leakage Current	$V_{CC} = 0V$; V_I or $V_O = 3.6V$		10	µA
I_{CC}	Quiescent Supply Current (Note 3.)	$1.65V \le V_{CC} \le 3.6V$; $V_I =$ GND or V_{CC}		20	µA
		$1.65V \le V_{CC} \le 3.6V$; $3.6V \le V_I, V_O \le 3.6V$		±20	µA
ΔI_{CC}	Increase in I_{CC} per Input	$2.7V < V_{CC} \le 3.6V$; $V_{IH} = V_{CC} - 0.6V$		750	µA

2. These values of V_I are used to test DC electrical characteristics only.
3. Outputs disabled or 3–state only.

AC CHARACTERISTICS (Note 4.; $t_R = t_F = 2.0ns$; $C_L = 30pF$; $R_L = 500\Omega$)

Symbol	Parameter	Waveform	Limits						Unit
			$T_A = -40°C$ to $+85°C$						
			$V_{CC} = 3.0V$ to $3.6V$		$V_{CC} = 2.3V$ to $2.7V$		$V_{CC} = 1.65$ to $1.95V$		
			Min	Max	Min	Max	Min	Max	
t_{PLH} t_{PHL}	Propagation Delay Input to Output	1	0.8 0.8	2.5 2.5	1.0 1.0	3.0 3.0	1.5 1.5	6.0 6.0	ns
t_{PZH} t_{PZL}	Output Enable Time to High and Low Level	2	0.8 0.8	3.5 3.5	1.0 1.0	4.1 4.1	1.5 1.5	8.2 8.2	ns
t_{PHZ} t_{PLZ}	Output Disable Time From High and Low Level	2	0.8 0.8	3.5 3.5	1.0 1.0	3.8 3.8	1.5 1.5	7.8 7.8	ns
t_{OSHL} t_{OSLH}	Output–to–Output Skew (Note 5.)			0.5 0.5		0.5 0.5		0.75 0.75	ns

4. For $C_L = 50pF$, add approximately 300ps to the AC maximum specification.
5. Skew is defined as the absolute value of the difference between the actual propagation delay for any two separate outputs of the same device. The specification applies to any outputs switching in the same direction, either HIGH–to–LOW (t_{OSHL}) or LOW–to–HIGH (t_{OSLH}); parameter guaranteed by design.

DYNAMIC SWITCHING CHARACTERISTICS

Symbol	Characteristic	Condition	T_A = +25°C	Unit
			Typ	
V_{OLP}	Dynamic LOW Peak Voltage (Note 6.)	V_{CC} = 1.8V, C_L = 30pF, V_{IH} = V_{CC}, V_{IL} = 0V	0.25	V
		V_{CC} = 2.5V, C_L = 30pF, V_{IH} = V_{CC}, V_{IL} = 0V	0.6	
		V_{CC} = 3.3V, C_L = 30pF, V_{IH} = V_{CC}, V_{IL} = 0V	0.8	
V_{OLV}	Dynamic LOW Valley Voltage (Note 6.)	V_{CC} = 1.8V, C_L = 30pF, V_{IH} = V_{CC}, V_{IL} = 0V	–0.25	V
		V_{CC} = 2.5V, C_L = 30pF, V_{IH} = V_{CC}, V_{IL} = 0V	–0.6	
		V_{CC} = 3.3V, C_L = 30pF, V_{IH} = V_{CC}, V_{IL} = 0V	–0.8	
V_{OHV}	Dynamic HIGH Valley Voltage (Note 7.)	V_{CC} = 1.8V, C_L = 30pF, V_{IH} = V_{CC}, V_{IL} = 0V	1.5	V
		V_{CC} = 2.5V, C_L = 30pF, V_{IH} = V_{CC}, V_{IL} = 0V	1.9	
		V_{CC} = 3.3V, C_L = 30pF, V_{IH} = V_{CC}, V_{IL} = 0V	2.2	

6. Number of outputs defined as “n”. Measured with “n–1” outputs switching from HIGH–to–LOW or LOW–to–HIGH. The remaining output is measured in the LOW state.
7. Number of outputs defined as “n”. Measured with “n–1” outputs switching from HIGH–to–LOW or LOW–to–HIGH. The remaining output is measured in the HIGH state.

CAPACITIVE CHARACTERISTICS

Symbol	Parameter	Condition	Typical	Unit
C_{IN}	Input Capacitance	Note 8.	6	pF
C_{OUT}	Output Capacitance	Note 8.	7	pF
C_{PD}	Power Dissipation Capacitance	Note 8., 10MHz	20	pF

8. V_{CC} = 1.8, 2.5 or 3.3V; V_I = 0V or V_{CC}.

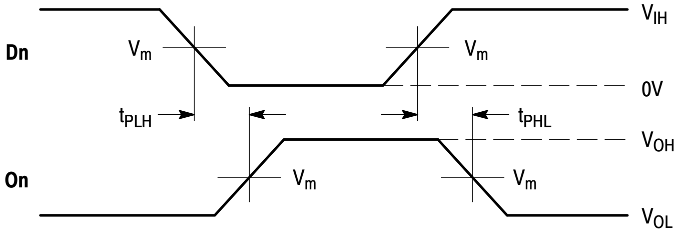
Dn
On
V_m
V_m
V_m
V_m
t_{PLH}
t_{PHL}
V_{IH}
0V
V_{OH}
V_{OL}

WAVEFORM 1 – PROPAGATION DELAYS

$t_R = t_F = 2.0\text{ns}$, 10% to 90%; f = 1MHz; $t_W = 500\text{ns}$

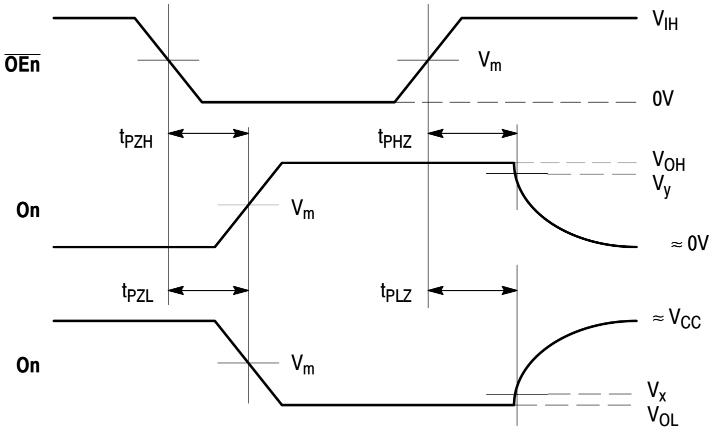
$\overline{\text{OEn}}$
On
On
V_m
V_m
V_m
t_{PZH}
t_{PHZ}
t_{PZL}
t_{PLZ}
V_{IH}
0V
V_{OH}
V_y
≈ 0V
≈ V_{CC}
V_x
V_{OL}

WAVEFORM 2 – OUTPUT ENABLE AND DISABLE TIMES

$t_R = t_F = 2.0\text{ns}$, 10% to 90%; f = 1MHz; $t_W = 500\text{ns}$

Figure 4. AC Waveforms

Symbol	V_{CC}		
	3.3V ±0.3V	**2.5V ±0.2V**	**1.8V ±0.15V**
V_{IH}	2.7V	V_{CC}	V_{CC}
V_m	1.5V	$V_{CC}/2$	$V_{CC}/2$
V_x	V_{OL} + 0.3V	V_{OL} + 0.15V	V_{OL} + 0.15V
V_y	V_{OH} – 0.3V	V_{OH} – 0.15V	V_{OH} – 0.15V

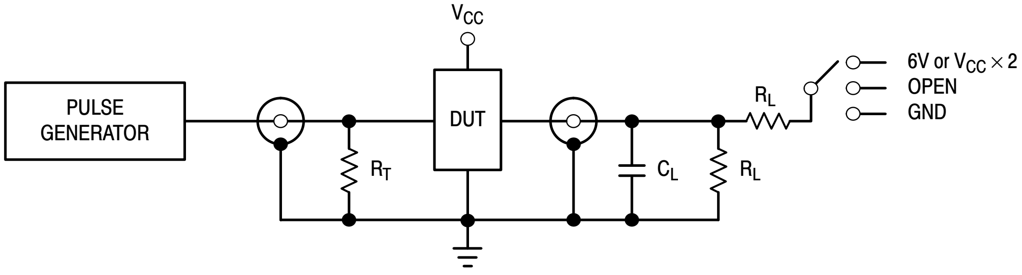
V_{CC}
PULSE GENERATOR
DUT
R_T
C_L
R_L
R_L
6V or V_{CC} × 2
OPEN
GND

TEST	SWITCH
t_{PLH}, t_{PHL}	Open
t_{PZL}, t_{PLZ}	6V at V_{CC} = 3.3 ±0.3V; V_{CC} × 2 at V_{CC} = 2.5 ±0.2V; 1.8 ±0.15V
t_{PZH}, t_{PHZ}	GND

C_L = 30pF or equivalent (Includes jig and probe capacitance)
R_L = 500Ω or equivalent
R_T = Z_{OUT} of pulse generator (typically 50Ω)

Figure 5. Test Circuit

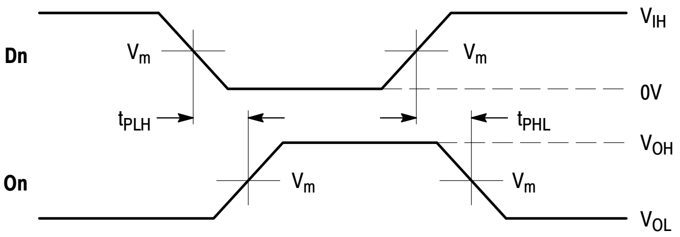
Dn
V_m
V_m
V_{IH}
0V
t_{PLH}
t_{PHL}
V_{OH}
On
V_m
V_m
V_{OL}

WAVEFORM 3 – PROPAGATION DELAYS
$t_R = t_F = 2.0ns$, 10% to 90%; f = 1MHz; $t_W = 500ns$

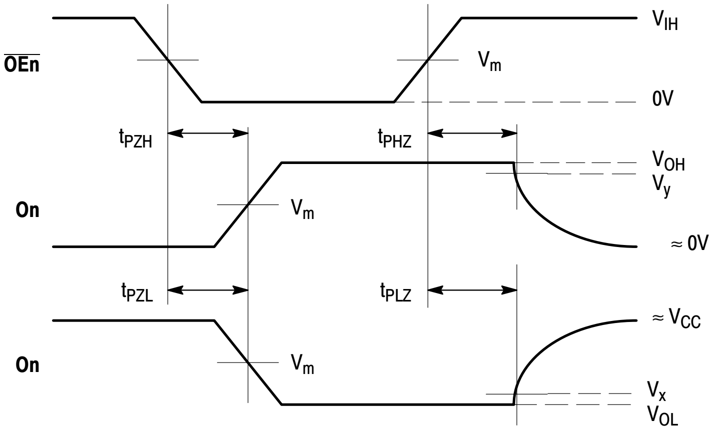
$\overline{OEn}$
V_{IH}
V_m
0V
t_{PZH}
t_{PHZ}
V_{OH}
V_y
On
V_m
≈ 0V
t_{PZL}
t_{PLZ}
≈ V_{CC}
On
V_m
V_x
V_{OL}

WAVEFORM 4 – OUTPUT ENABLE AND DISABLE TIMES
$t_R = t_F = 2.0ns$, 10% to 90%; f = 1MHz; $t_W = 500ns$

Figure 6. AC Waveforms

Symbol	V_{CC}	
	3.3V ±0.3V	**2.7V**
V_{IH}	2.7V	2.7V
V_m	1.5V	1.5V
V_x	V_{OL} + 0.3V	V_{OL} + 0.3V
V_y	V_{OH} – 0.3V	V_{OH} – 0.3V

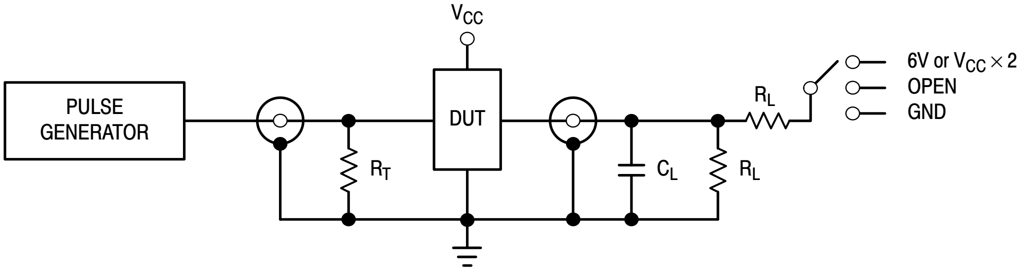
V_{CC}
PULSE GENERATOR
DUT
R_T
C_L
R_L
R_L
6V or V_{CC} × 2
OPEN
GND

TEST	SWITCH
t_{PLH}, t_{PHL}	Open
t_{PZL}, t_{PLZ}	6V at V_{CC} = 3.3 ±0.3V; V_{CC} × 2 at V_{CC} = 2.5 ±0.2V; 1.8 ±0.15V
t_{PZH}, t_{PHZ}	GND

C_L = 50pF or equivalent (Includes jig and probe capacitance)
R_L = 500Ω or equivalent
R_T = Z_{OUT} of pulse generator (typically 50Ω)

Figure 7. Test Circuit

AC CHARACTERISTICS ($t_R = t_F$ = 2.0ns; C_L = 50pF; R_L = 500Ω)

Symbol	Parameter	Waveform	Limits				Unit
			T_A = –40°C to +85°C				
			V_{CC} = 3.0V to 3.6V		V_{CC} = 2.7V		
			Min	Max	Min	Max	
t_{PLH} t_{PHL}	Propagation Delay Input to Output	3	1.0 1.0	3.9 3.9		5.3 5.3	ns
t_{PZH} t_{PZL}	Output Enable Time to High and Low Level	4	1.0 1.0	5.0 5.0		6.1 6.1	ns
t_{PHZ} t_{PLZ}	Output Disable Time From High and Low Level	4	1.0 1.0	4.4 4.4		4.8 4.8	ns
t_{OSHL} t_{OSLH}	Output–to–Output Skew (Note 9.)			0.5 0.5		0.5 0.5	ns

9. Skew is defined as the absolute value of the difference between the actual propagation delay for any two separate outputs of the same device. The specification applies to any outputs switching in the same direction, either HIGH–to–LOW (t_{OSHL}) or LOW–to–HIGH (t_{OSLH}); parameter guaranteed by design.

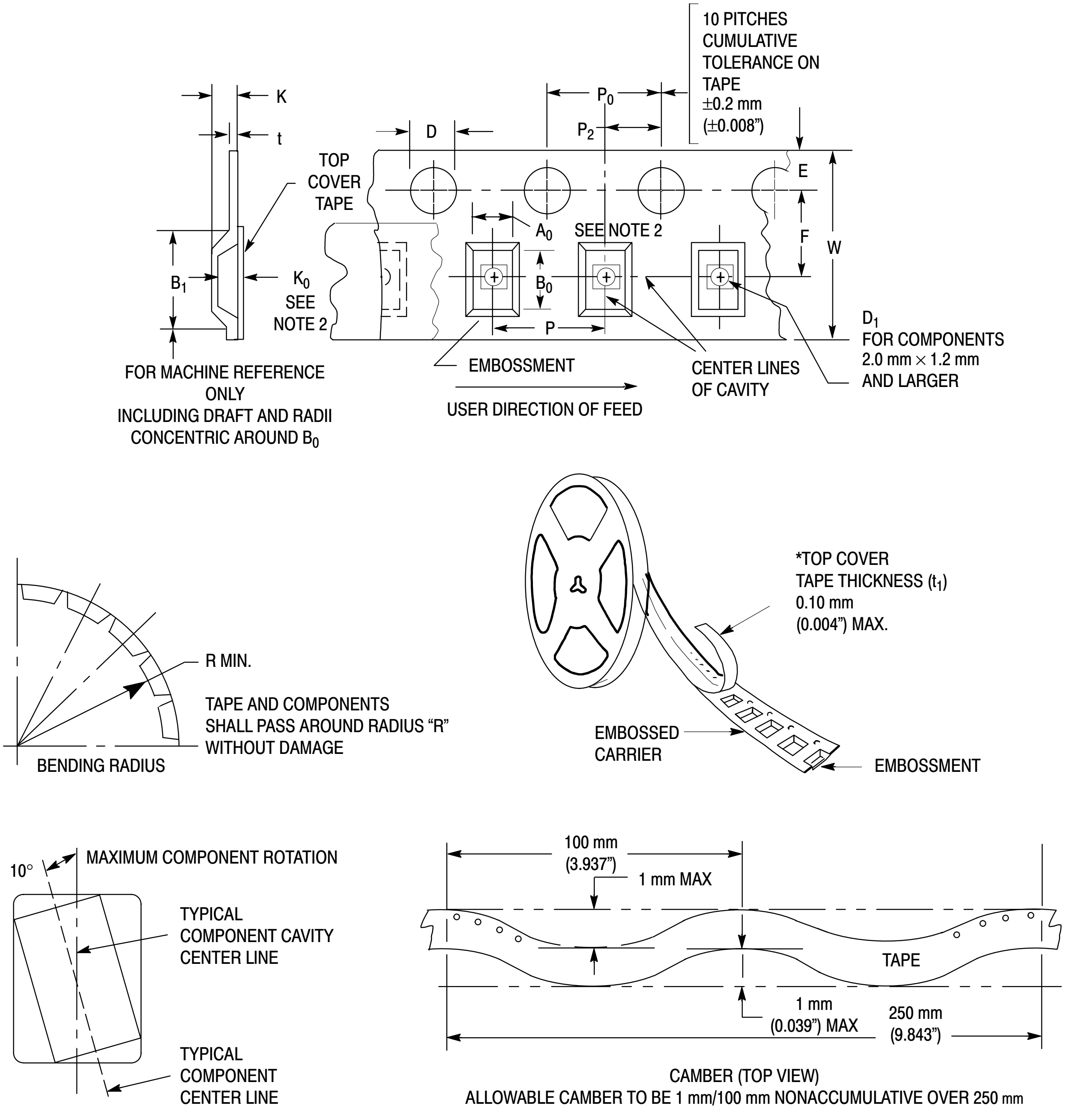
10 PITCHES CUMULATIVE TOLERANCE ON TAPE ±0.2 mm (±0.008")
K
t
P_0
P_2
D
TOP COVER TAPE
E
F
W
A_0
SEE NOTE 2
B_1
K_0 SEE NOTE 2
B_0
P
D_1 FOR COMPONENTS 2.0 mm × 1.2 mm AND LARGER
FOR MACHINE REFERENCE ONLY INCLUDING DRAFT AND RADII CONCENTRIC AROUND B_0
EMBOSSMENT
USER DIRECTION OF FEED
CENTER LINES OF CAVITY
*TOP COVER TAPE THICKNESS (t_1) 0.10 mm (0.004") MAX.
R MIN.
TAPE AND COMPONENTS SHALL PASS AROUND RADIUS "R" WITHOUT DAMAGE
BENDING RADIUS
EMBOSSED CARRIER
EMBOSSMENT
10°
MAXIMUM COMPONENT ROTATION
TYPICAL COMPONENT CAVITY CENTER LINE
TYPICAL COMPONENT CENTER LINE
100 mm (3.937")
1 mm MAX
TAPE
1 mm (0.039") MAX
250 mm (9.843")
CAMBER (TOP VIEW)
ALLOWABLE CAMBER TO BE 1 mm/100 mm NONACCUMULATIVE OVER 250 mm

Figure 8. Carrier Tape Specifications

EMBOSSED CARRIER DIMENSIONS (See Notes 1 and 2)

Tape Size	B_1 Max	D	D_1	E	F	K	P	P_0	P_2	R	T	W
24mm	20.1mm (0.791")	1.5 + 0.1mm −0.0 (0.059 +0.004" −0.0)	1.5mm Min (0.060")	1.75 ±0.1 mm (0.069 ±0.004")	11.5 ±0.10 mm (0.453 ±0.004")	11.9 mm Max (0.468")	16.0 ±0.1 mm (0.63 ±0.004")	4.0 ±0.1 mm (0.157 ±0.004")	2.0 ±0.1 mm (0.079 ±0.004")	30 mm (1.18")	0.6 mm (0.024")	24.3 mm (0.957")

1. Metric Dimensions Govern–English are in parentheses for reference only.
2. A_0, B_0, and K_0 are determined by component size. The clearance between the components and the cavity must be within 0.05 mm min to 0.50 mm max. The component cannot rotate more than 10° within the determined cavity.

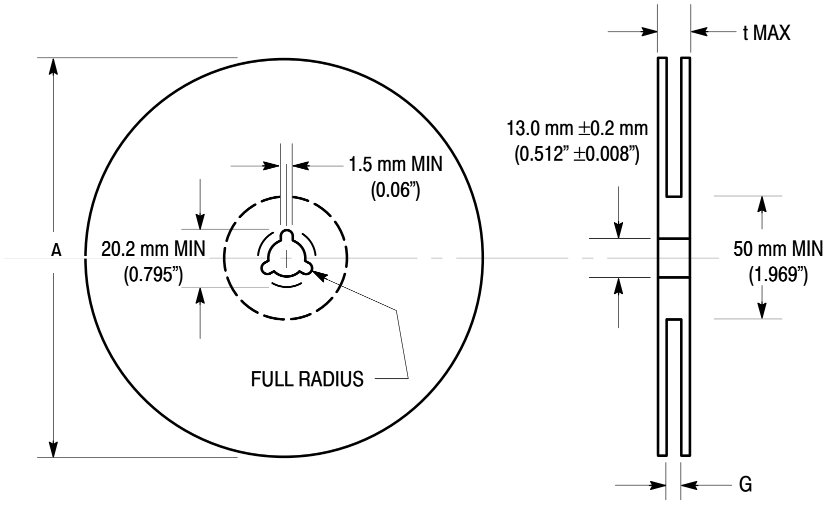
t MAX
13.0 mm ±0.2 mm
(0.512" ±0.008")
1.5 mm MIN
(0.06")
A
20.2 mm MIN
(0.795")
50 mm MIN
(1.969")
FULL RADIUS
G

Figure 9. Reel Dimensions

REEL DIMENSIONS

Tape Size	A Max	G	t Max
24 mm	360 mm (14.173")	24.4 mm + 2.0 mm, −0.0 (0.961" + 0.078", −0.00)	30.4 mm (1.197")

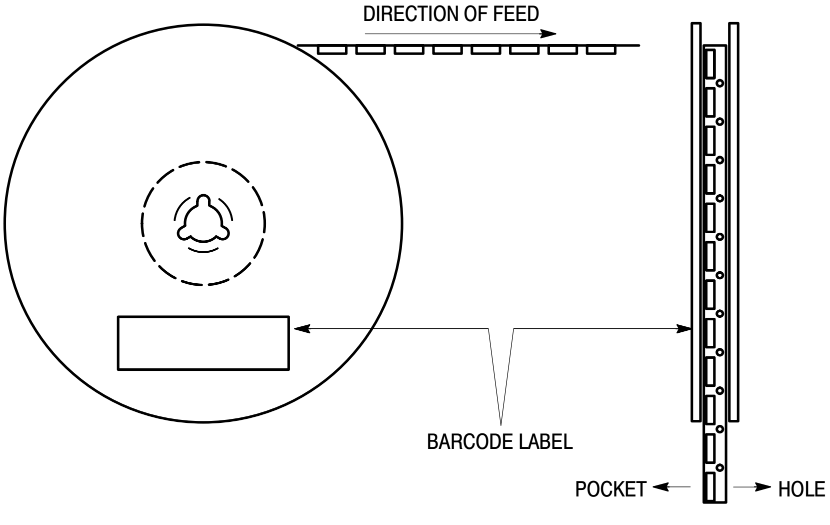
DIRECTION OF FEED
BARCODE LABEL
POCKET
HOLE

Figure 10. Reel Winding Direction

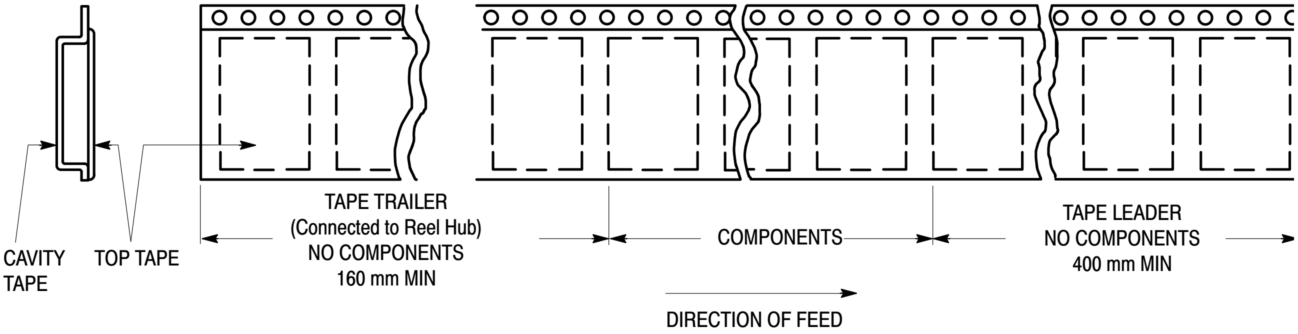
CAVITY TAPE
TOP TAPE
TAPE TRAILER
(Connected to Reel Hub)
NO COMPONENTS
160 mm MIN
COMPONENTS
TAPE LEADER
NO COMPONENTS
400 mm MIN
DIRECTION OF FEED

Figure 11. Tape Ends for Finished Goods

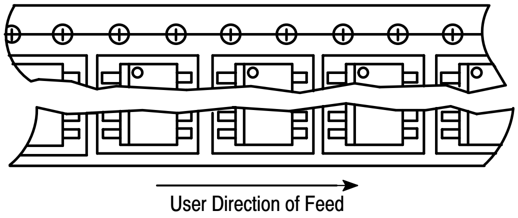
User Direction of Feed

Figure 12. Reel Configuration

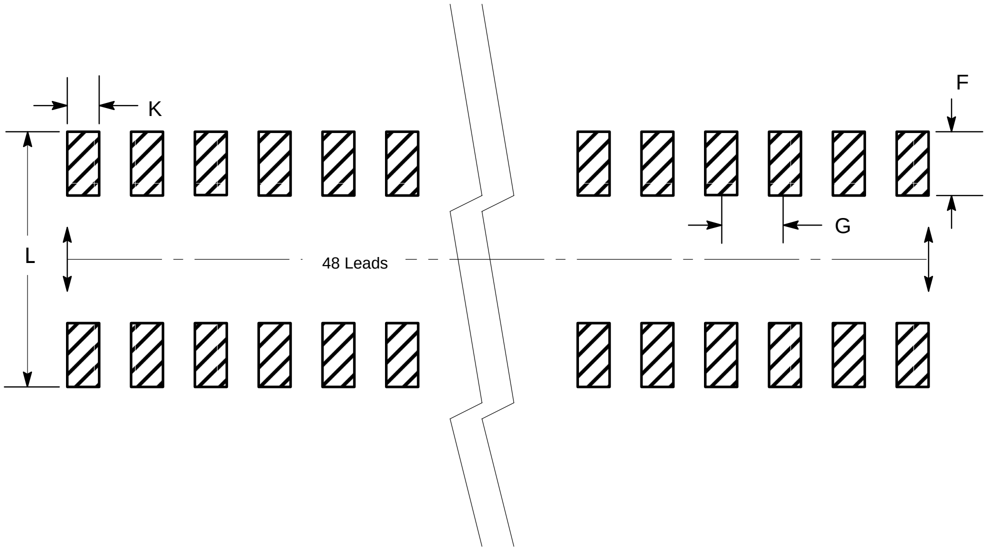
K
F
G
L
48 Leads

Figure 13. Package Footprint

PACKAGE DIMENSIONS

TSSOP
DT SUFFIX
CASE 1201–01
ISSUE A

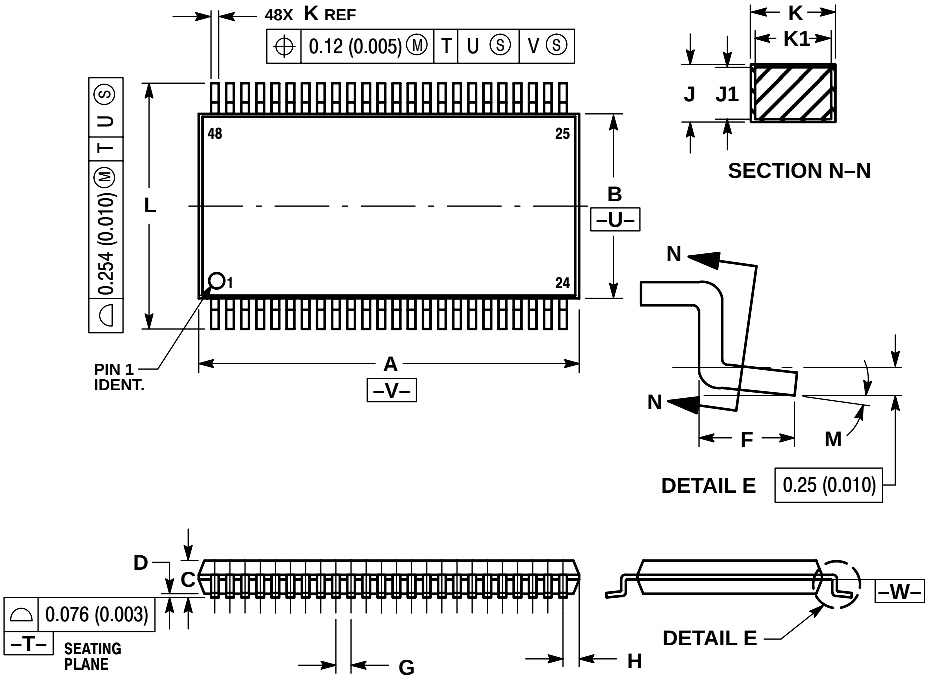

NOTES:
1. DIMENSIONING AND TOLERANCING PER ANSI Y14.5M, 1982.
2. CONTROLLING DIMENSION: MILLIMETER.
3. DIMENSIONS A AND B DO NOT INCLUDE MOLD FLASH, PROTRUSIONS OR GATE BURRS. MOLD FLASH OR GATE BURRS SHALL NOT EXCEED 0.15 (0.006) PER SIDE.
4. DIMENSION K DOES NOT INCLUDE DAMBAR PROTRUSION. ALLOWABLE DAMBAR PROTRUSION SHALL BE 0.08 (0.003) TOTAL IN EXCESS OF THE K DIMENSION AT MAXIMUM MATERIAL CONDITION.
5. TERMINAL NUMBERS ARE SHOWN FOR REFERENCE ONLY.
6. DIMENSIONS A AND B ARE TO BE DETERMINED AT DATUM PLANE –W–.

	MILLIMETERS		INCHES	
DIM	MIN	MAX	MIN	MAX
A	12.40	12.60	0.488	0.496
B	6.00	6.20	0.236	0.244
C	---	1.10	---	0.043
D	0.05	0.15	0.002	0.006
F	0.50	0.75	0.020	0.030
G	0.50 BSC		0.0197 BSC	
H	0.37	---	0.015	---
J	0.09	0.20	0.004	0.008
J1	0.09	0.16	0.004	0.006
K	0.17	0.27	0.007	0.011
K1	0.17	0.23	0.007	0.009
L	7.95	8.25	0.313	0.325
M	0 °	8 °	0 °	8 °

ON Semiconductor and are trademarks of Semiconductor Components Industries, LLC (SCILLC). SCILLC reserves the right to make changes without further notice to any products herein. SCILLC makes no warranty, representation or guarantee regarding the suitability of its products for any particular purpose, nor does SCILLC assume any liability arising out of the application or use of any product or circuit, and specifically disclaims any and all liability, including without limitation special, consequential or incidental damages. "Typical" parameters which may be provided in SCILLC data sheets and/or specifications can and do vary in different applications and actual performance may vary over time. All operating parameters, including "Typicals" must be validated for each customer application by customer's technical experts. SCILLC does not convey any license under its patent rights nor the rights of others. SCILLC products are not designed, intended, or authorized for use as components in systems intended for surgical implant into the body, or other applications intended to support or sustain life, or for any other application in which the failure of the SCILLC product could create a situation where personal injury or death may occur. Should Buyer purchase or use SCILLC products for any such unintended or unauthorized application, Buyer shall indemnify and hold SCILLC and its officers, employees, subsidiaries, affiliates, and distributors harmless against all claims, costs, damages, and expenses, and reasonable attorney fees arising out of, directly or indirectly, any claim of personal injury or death associated with such unintended or unauthorized use, even if such claim alleges that SCILLC was negligent regarding the design or manufacture of the part. SCILLC is an Equal Opportunity/Affirmative Action Employer.

PUBLICATION ORDERING INFORMATION

NORTH AMERICA Literature Fulfillment:
Literature Distribution Center for ON Semiconductor
P.O. Box 5163, Denver, Colorado 80217 USA
Phone: 303–675–2175 or 800–344–3860 Toll Free USA/Canada
Fax: 303–675–2176 or 800–344–3867 Toll Free USA/Canada
Email: ONlit@hibbertco.com
Fax Response Line: 303–675–2167 or 800–344–3810 Toll Free USA/Canada

N. American Technical Support: 800–282–9855 Toll Free USA/Canada

EUROPE: LDC for ON Semiconductor – European Support
German Phone: (+1) 303–308–7140 (Mon–Fri 2:30pm to 7:00pm CET)
Email: ONlit–german@hibbertco.com
French Phone: (+1) 303–308–7141 (Mon–Fri 2:00pm to 7:00pm CET)
Email: ONlit–french@hibbertco.com
English Phone: (+1) 303–308–7142 (Mon–Fri 12:00pm to 5:00pm GMT)
Email: ONlit@hibbertco.com

EUROPEAN TOLL–FREE ACCESS*: 00–800–4422–3781
*Available from Germany, France, Italy, UK, Ireland

CENTRAL/SOUTH AMERICA:
Spanish Phone: 303–308–7143 (Mon–Fri 8:00am to 5:00pm MST)
Email: ONlit–spanish@hibbertco.com
Toll–Free from Mexico: Dial 01–800–288–2872 for Access – then Dial 866–297–9322

ASIA/PACIFIC: LDC for ON Semiconductor – Asia Support
Phone: 303–675–2121 (Tue–Fri 9:00am to 1:00pm, Hong Kong Time)
Toll Free from Hong Kong & Singapore:
001–800–4422–3781
Email: ONlit–asia@hibbertco.com

JAPAN: ON Semiconductor, Japan Customer Focus Center
4–32–1 Nishi–Gotanda, Shinagawa–ku, Tokyo, Japan 141–0031
Phone: 81–3–5740–2700
Email: r14525@onsemi.com

ON Semiconductor Website: http://onsemi.com

For additional information, please contact your local
Sales Representative.