M74HC153

DUAL 4 CHANNEL MULTIPLEXER

- HIGH SPEED:
  t_{PD} = 16ns (TYP.) at V_{CC} = 6V
- LOW POWER DISSIPATION:
  I_{CC} = 4µA(MAX.) at T_A=25°C
- HIGH NOISE IMMUNITY:
  $V_{NIH} = V_{NIL}$ = 28 % V_{CC} (MIN.)
- SYMMETRICAL OUTPUT IMPEDANCE:
  $|I_{OH}| = I_{OL}$ = 4mA (MIN)
- BALANCED PROPAGATION DELAYS:
  $t_{PLH} \cong t_{PHL}$
- WIDE OPERATING VOLTAGE RANGE:
  V_{CC} (OPR) = 2V to 6V
- PIN AND FUNCTION COMPATIBLE WITH 74 SERIES 153

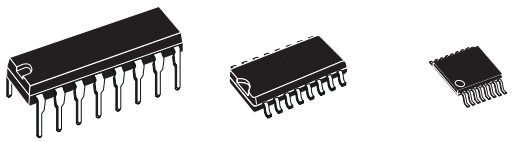

DIP SOP TSSOP

ORDER CODES

PACKAGE	TUBE	T & R
DIP	M74HC153B1R	
SOP	M74HC153M1R	M74HC153RM13TR
TSSOP		M74HC153TTR

DESCRIPTION

The M74HC153 is an high speed CMOS DUAL 4 CHANNEL MULTIPLEXER fabricated with silicon gate C^2MOS technology.

Each of these data (1C0-1C3, 2C0-2C3) is selected by the two address inputs A and B. Separate strobe inputs ($1\overline{G}$, $2\overline{G}$) are provided for each of the two four-line sections. The strobe input ($n\overline{G}$) can be used to inhibit the data output; the output of M74HC153 is fixed at low level while the strobe input is held high.

All inputs are equipped with protection circuits against static discharge and transient excess voltage.

PIN CONNECTION AND IEC LOGIC SYMBOLS

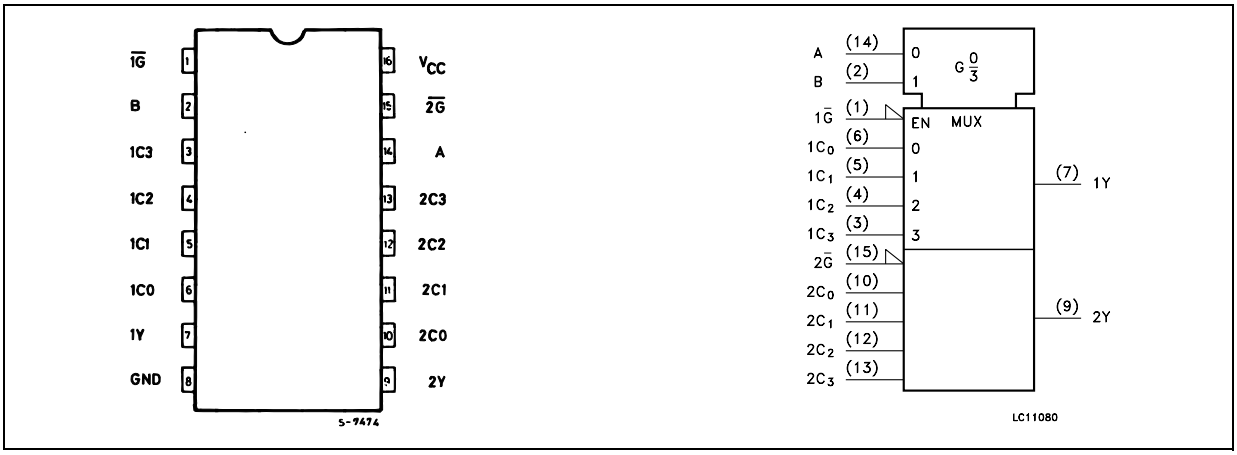

INPUT AND OUTPUT EQUIVALENT CIRCUIT

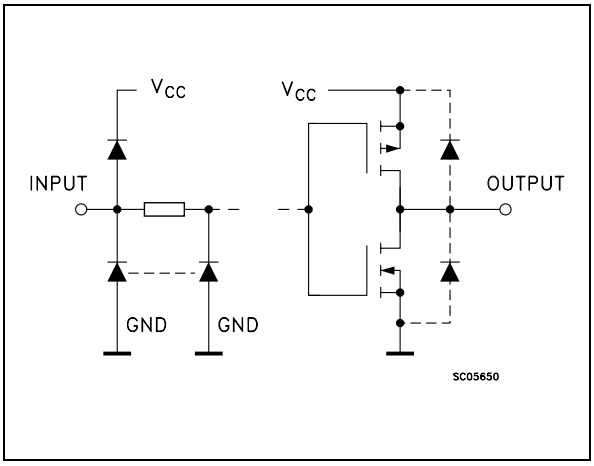

PIN DESCRIPTION

PIN No	SYMBOL	NAME AND FUNCTION
1, 15	$1\overline{G}$, $2\overline{G}$	Output Enable Inputs
14, 2	A, B	Common Data Select Inputs
6, 5, 4, 3	1C0 to 1C3	Data Inputs From Source 1
7	1Y	Multiplexer Output From Source 1
9	2Y	Multiplexer Output From Source 2
10, 11, 12, 13	2C0 to 2C3	Data Inputs From Source 2
8	GND	Ground (0V)
16	V_{CC}	Positive Supply Voltage

TRUTH TABLE

SELECT INPUTS		DATA INPUTS				STROBE	OUTPUT Y
B	A	C_0	C_1	C_2	C_3	$\overline{G}$	
X	X	X	X	X	X	H	L
L	L	L	X	X	X	L	L
L	L	H	X	X	X	L	H
L	H	X	L	X	X	L	L
L	H	X	H	X	X	L	H
H	L	X	X	L	X	L	L
H	L	X	X	H	X	L	H
H	H	X	X	X	L	L	L
H	H	X	X	X	H	L	H

X : Don’t Care

LOGIC DIAGRAM

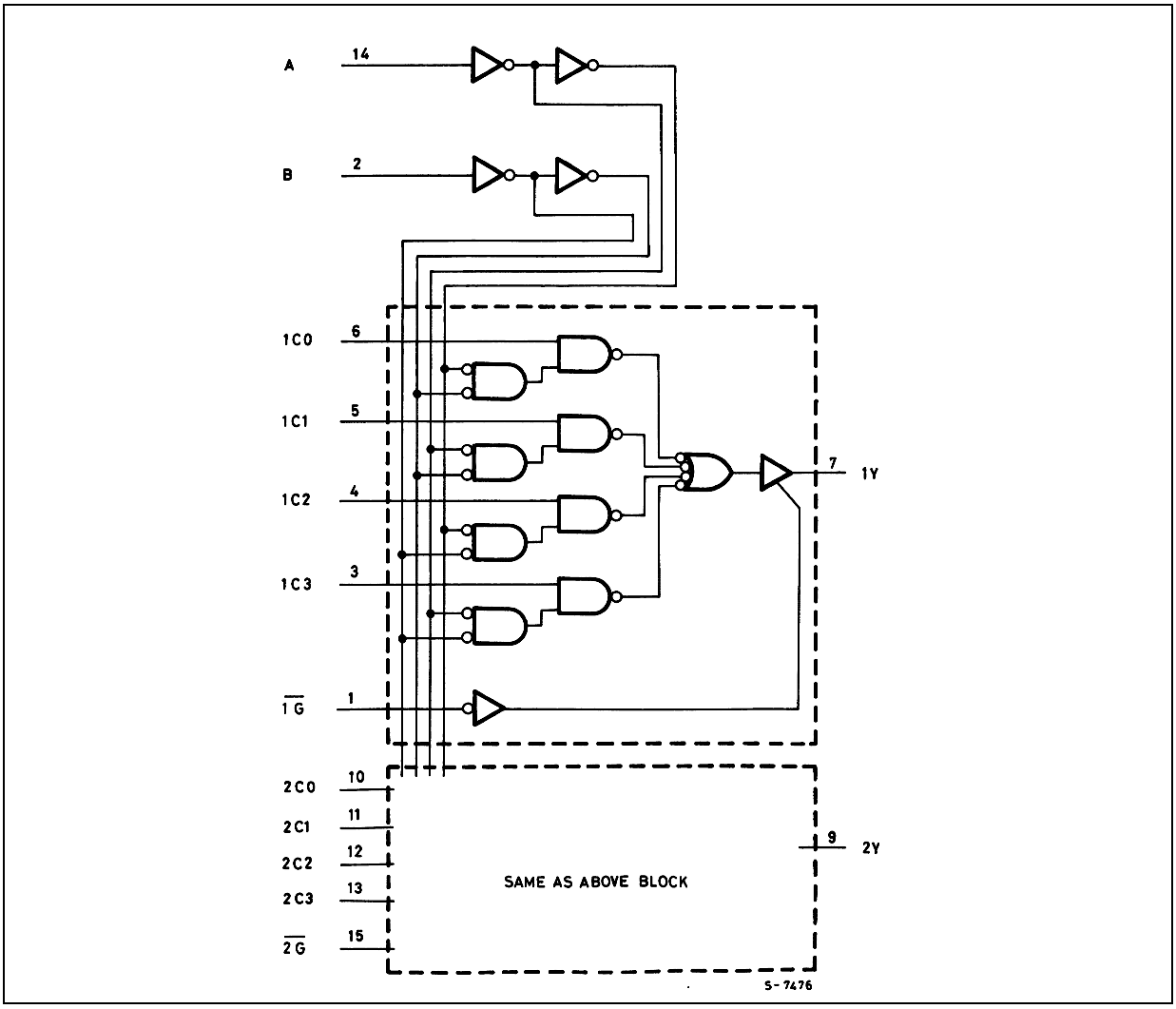

This logic diagram has not be used to estimate propagation delays

ABSOLUTE MAXIMUM RATINGS

Symbol	Parameter	Value	Unit
V_{CC}	Supply Voltage	-0.5 to +7	V
V_I	DC Input Voltage	-0.5 to V_{CC} + 0.5	V
V_O	DC Output Voltage	-0.5 to V_{CC} + 0.5	V
I_{IK}	DC Input Diode Current	± 20	mA
I_{OK}	DC Output Diode Current	± 20	mA
I_O	DC Output Current	± 25	mA
I_{CC} or I_{GND}	DC V_{CC} or Ground Current	± 50	mA
P_D	Power Dissipation	500(*)	mW
T_{stg}	Storage Temperature	-65 to +150	°C
T_L	Lead Temperature (10 sec)	300	°C

Absolute Maximum Ratings are those values beyond which damage to the device may occur. Functional operation under these conditions is not implied
(*) 500mW at 65 °C; derate to 300mW by 10mW/°C from 65°C to 85°C

RECOMMENDED OPERATING CONDITIONS

Symbol	Parameter		Value	Unit
V_{CC}	Supply Voltage		2 to 6	V
V_I	Input Voltage		0 to V_{CC}	V
V_O	Output Voltage		0 to V_{CC}	V
T_{op}	Operating Temperature		-55 to 125	°C
t_r, t_f	Input Rise and Fall Time	V_{CC} = 2.0V	0 to 1000	ns
		V_{CC} = 4.5V	0 to 500	ns
		V_{CC} = 6.0V	0 to 400	ns

DC SPECIFICATIONS

Symbol	Parameter	Test Condition		Value							Unit
		V_{CC} (V)		T_A = 25°C			-40 to 85°C		-55 to 125°C		
				Min.	Typ.	Max.	Min.	Max.	Min.	Max.	
V_{IH}	High Level Input Voltage	2.0		1.5			1.5		1.5		V
		4.5		3.15			3.15		3.15		
		6.0		4.2			4.2		4.2		
V_{IL}	Low Level Input Voltage	2.0				0.5		0.5		0.5	V
		4.5				1.35		1.35		1.35	
		6.0				1.8		1.8		1.8	
V_{OH}	High Level Output Voltage	2.0	I_O=-20 µA	1.9	2.0		1.9		1.9		V
		4.5	I_O=-20 µA	4.4	4.5		4.4		4.4		
		6.0	I_O=-20 µA	5.9	6.0		5.9		5.9		
		4.5	I_O=-4.0 mA	4.18	4.31		4.13		4.10		
		6.0	I_O=-5.2 mA	5.68	5.8		5.63		5.60		
V_{OL}	Low Level Output Voltage	2.0	I_O=20 µA		0.0	0.1		0.1		0.1	V
		4.5	I_O=20 µA		0.0	0.1		0.1		0.1	
		6.0	I_O=20 µA		0.0	0.1		0.1		0.1	
		4.5	I_O=4.0 mA		0.17	0.26		0.33		0.40	
		6.0	I_O=5.2 mA		0.18	0.26		0.33		0.40	
I_I	Input Leakage Current	6.0	V_I = V_{CC} or GND			± 0.1		± 1		± 1	µA
I_{CC}	Quiescent Supply Current	6.0	V_I = V_{CC} or GND			4		40		80	µA

AC ELECTRICAL CHARACTERISTICS (C_L = 50 pF, Input t_r = t_f = 6ns)

Symbol	Parameter	Test Condition		Value							Unit
		V_{CC} (V)		T_A = 25°C			-40 to 85°C		-55 to 125°C		
				Min.	Typ.	Max.	Min.	Max.	Min.	Max.	
t_{TLH} t_{THL}	Output Transition Time	2.0			30	75		95		110	ns
		4.5			8	15		19		22	
		6.0			7	13		16		19	
t_{PLH} t_{PHL}	Propagation Delay Time (Cn - Y)	2.0			48	115		145		175	ns
		4.5			15	23		29		35	
		6.0			12	20		25		30	
t_{PLH} t_{PHL}	Propagation Delay Time (A, B - Y)	2.0			68	150		190		225	ns
		4.5			20	30		38		45	
		6.0			16	26		32		38	
t_{PLH} t_{PHL}	Propagation Delay Time ($\overline{G}$ - Y)	2.0			30	85		105		130	ns
		4.5			10	17		21		26	
		6.0			9	14		18		22	

CAPACITIVE CHARACTERISTICS

Symbol	Parameter	Test Condition		Value							Unit
		V_{CC} (V)		T_A = 25°C			-40 to 85°C		-55 to 125°C		
				Min.	Typ.	Max.	Min.	Max.	Min.	Max.	
C_{IN}	Input Capacitance	5.0			5	10		10		10	pF
C_{PD}	Power Dissipation Capacitance (note 1)	5.0			58						pF

1) C_{PD} is defined as the value of the IC's internal equivalent capacitance which is calculated from the operating current consumption without load. (Refer to Test Circuit). Average operating current can be obtained by the following equation. $I_{CC(opr)} = C_{PD} \times V_{CC} \times f_{IN} + I_{CC}/4$(per circuit)

TEST CIRCUIT

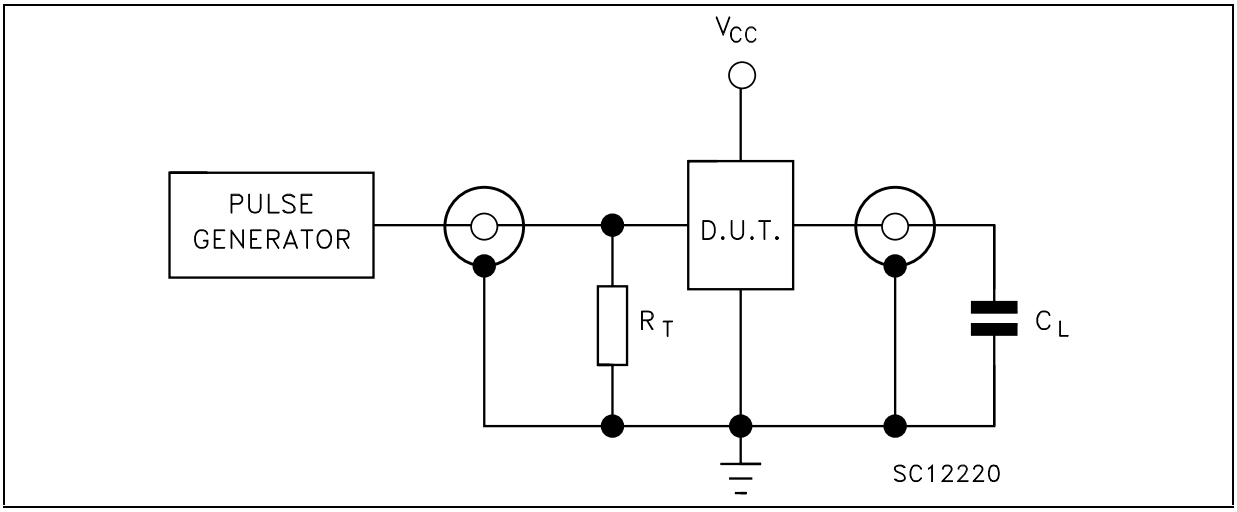

C_L = 50pF or equivalent (includes jig and probe capacitance)
R_T = Z_{OUT} of pulse generator (typically 50Ω)

WAVEFORM 1 : PROPAGATION DELAY TIME (f=1MHz; 50% duty cycle)

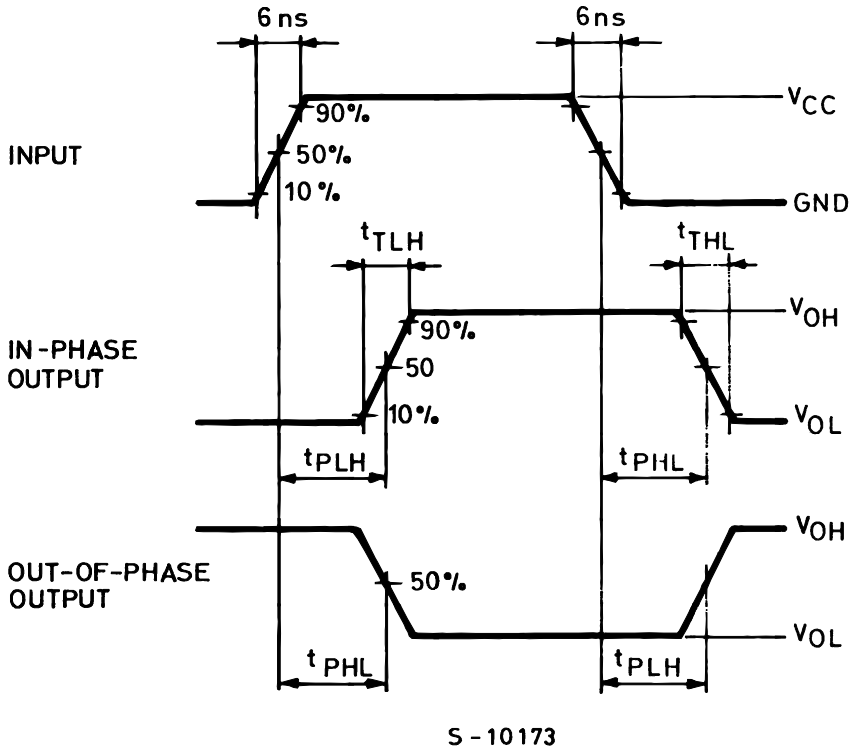

Plastic DIP-16 (0.25) MECHANICAL DATA

DIM.	mm.			inch		
	MIN.	TYP	MAX.	MIN.	TYP.	MAX.
a1	0.51			0.020		
B	0.77		1.65	0.030		0.065
b		0.5			0.020	
b1		0.25			0.010	
D			20			0.787
E		8.5			0.335	
e		2.54			0.100	
e3		17.78			0.700	
F			7.1			0.280
I			5.1			0.201
L		3.3			0.130	
Z			1.27			0.050

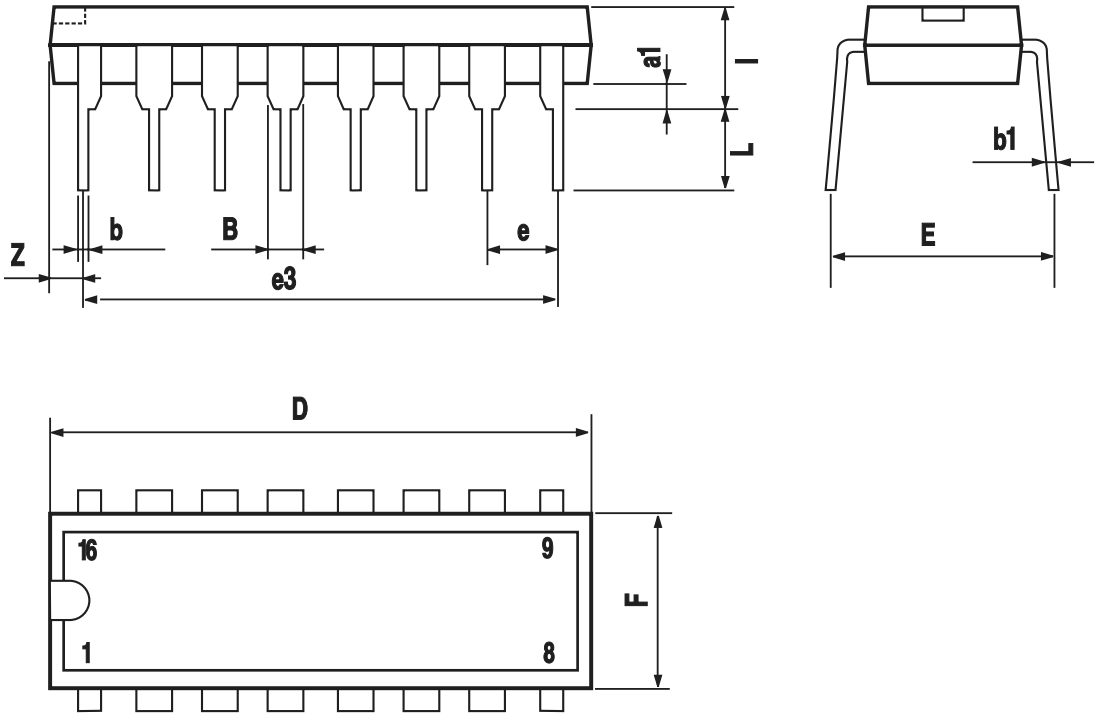

P001C

SO-16 MECHANICAL DATA

DIM.	mm.			inch		
	MIN.	TYP	MAX.	MIN.	TYP.	MAX.
A			1.75			0.068
a1	0.1		0.2	0.003		0.007
a2			1.65			0.064
b	0.35		0.46	0.013		0.018
b1	0.19		0.25	0.007		0.010
C		0.5			0.019	
c1	45° (typ.)					
D	9.8		10	0.385		0.393
E	5.8		6.2	0.228		0.244
e		1.27			0.050	
e3		8.89			0.350	
F	3.8		4.0	0.149		0.157
G	4.6		5.3	0.181		0.208
L	0.5		1.27	0.019		0.050
M			0.62			0.024
S	8° (max.)					

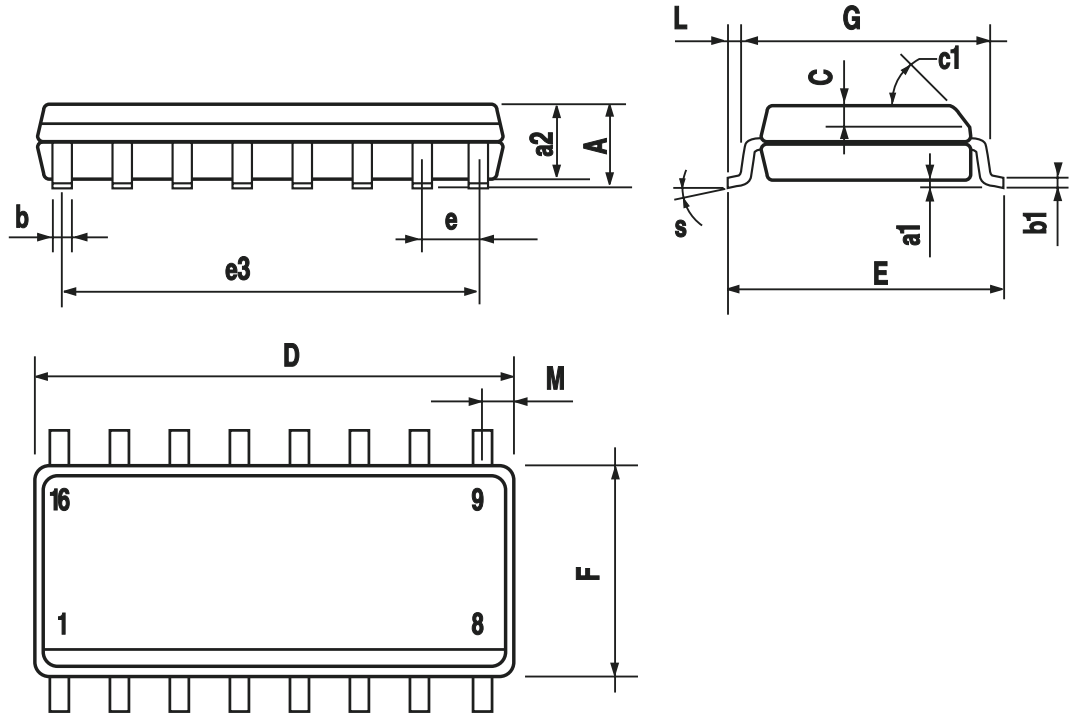

PO13H

TSSOP16 MECHANICAL DATA

DIM.	mm.			inch		
	MIN.	TYP	MAX.	MIN.	TYP.	MAX.
A			1.2			0.047
A1	0.05		0.15	0.002	0.004	0.006
A2	0.8	1	1.05	0.031	0.039	0.041
b	0.19		0.30	0.007		0.012
c	0.09		0.20	0.004		0.0089
D	4.9	5	5.1	0.193	0.197	0.201
E	6.2	6.4	6.6	0.244	0.252	0.260
E1	4.3	4.4	4.48	0.169	0.173	0.176
e		0.65 BSC			0.0256 BSC	
K	0°		8°	0°		8°
L	0.45	0.60	0.75	0.018	0.024	0.030

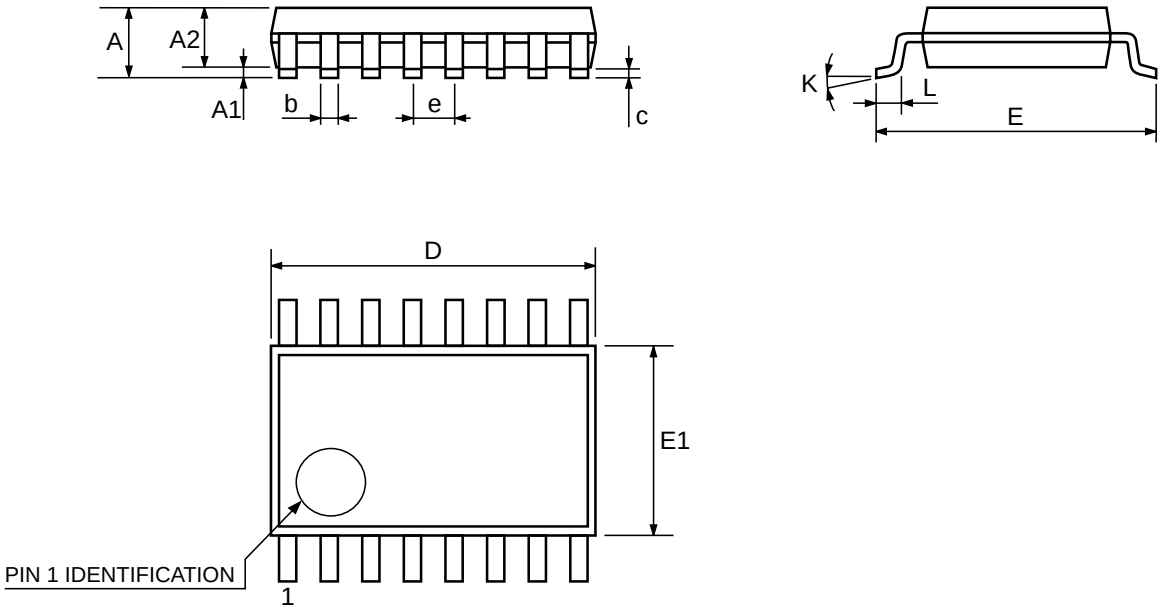

0080338D

Information furnished is believed to be accurate and reliable. However, STMicroelectronics assumes no responsibility for the consequences of use of such information nor for any infringement of patents or other rights of third parties which may result from its use. No license is granted by implication or otherwise under any patent or patent rights of STMicroelectronics. Specifications mentioned in this publication are subject to change without notice. This publication supersedes and replaces all information previously supplied. STMicroelectronics products are not authorized for use as critical components in life support devices or systems without express written approval of STMicroelectronics.

© The ST logo is a registered trademark of STMicroelectronics

© 2001 STMicroelectronics - Printed in Italy - All Rights Reserved
STMicroelectronics GROUP OF COMPANIES
Australia - Brazil - China - Finland - France - Germany - Hong Kong - India - Italy - Japan - Malaysia - Malta - Morocco
Singapore - Spain - Sweden - Switzerland - United Kingdom
© http://www.st.com