HCF4724B

8 BIT ADDRESSABLE LATCH

- SERIAL DATA INPUT - ACTIVE PARALLEL OUTPUT
- STORAGE REGISTER CAPABILITY - MASTER CLEAR
- CAN FUNCTION AS DEMULTIPLEXER
- QUIESCENT CURRENT SPECIFIED UP TO 20V
- STANDARDIZED SYMMETRICAL OUTPUT CHARACTERISTICS
- INPUT LEAKAGE CURRENT I_I = 100nA (MAX) AT V_{DD} = 18V T_A = 25°C
- 100% TESTED FOR QUIESCENT CURRENT
- MEETS ALL REQUIREMENTS OF JEDEC JESD13B "STANDARD SPECIFICATIONS FOR DESCRIPTION OF B SERIES CMOS DEVICES"

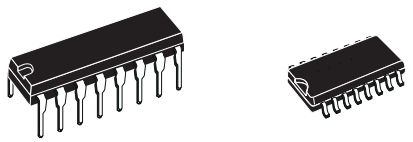

DIP SOP

ORDER CODES

PACKAGE	TUBE	T & R
DIP	HCF4724BEY	
SOP	HCF4724BM1	HCF4724M013TR

DESCRIPTION

HCF4724B is a monolithic integrated circuit fabricated in Metal Oxide Semiconductor technology available in DIP and SOP packages.

HCF4724B, an 8-bit addressable latch, is a serial-input, parallel output storage register that can perform a variety of functions. Data is input to a particular bit in the latch when the bit is addressed (by means of input A0, A1, A2) and when WRITE DISABLE is at a low level. When WRITE DISABLE is high, data entry is inhibited; however, all 8 outputs can be continuously read independent of WRITE DISABLE and address inputs. A master RESET input is available, which resets all bits to a logic "0" level when RESET and WRITE DISABLE are at a high level. When RESET is at a high level, and WRITE DISABLE is at a low level, the latch acts as a 1-of-8 demultiplexer; the bit that is addressed has an active output which follows the data input, while all unaddressed bits are held to a logic "0" level.

PIN CONNECTION

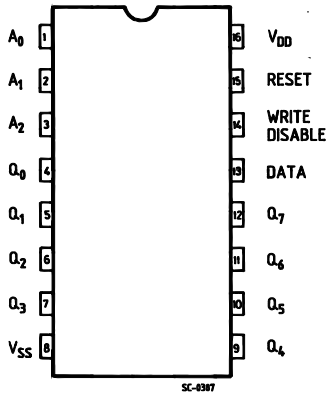

IINPUT EQUIVALENT CIRCUIT

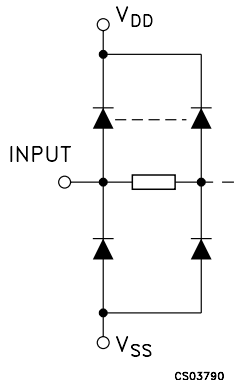

PIN DESCRIPTION

PIN No	SYMBOL	NAME AND FUNCTION
1, 2, 3	A0 to A2	Address Inputs
4, 5, 6, 7, 9, 10, 11, 12	Q0 to Q7	Latch Outputs
13	DATA	Data Inputs
15	RESET	Reset Input
14	WRITE DISABLE	Write Disable Input
8	V_{SS}	Negative Supply Voltage
16	V_{DD}	Positive Supply Voltage

FUNCTIONAL DIAGRAM

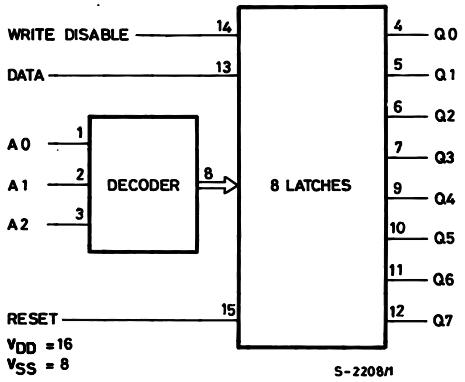

TRUTH TABLE

SELECT INPUTS			LATCH ADDRESSED
C	B	A	
L	L	L	Q0
L	L	H	Q1
L	H	L	Q2
L	H	H	Q3
H	L	L	Q4
H	L	H	Q5
H	H	L	Q6
H	H	H	Q7

INPUTS		OUTPUTS OF ADDRESSED LATCH	EACH OTHER OUTPUT	FUNCTION
WRITE DISABLE	RESET			
L	L	D	Qi0	ADDRESSABLE LATCH
L	H	Qi0	Qi0	MEMORY
H	L	D	L	DEMULTIPLEXER
H	H	L	L	CLEAR ALL BITS TO "0"

D: The level at the data input ; Q_{i0} The level before the indicated steady state input conditions were established, (i=0, 1,...7)

LOGIC DIAGRAM

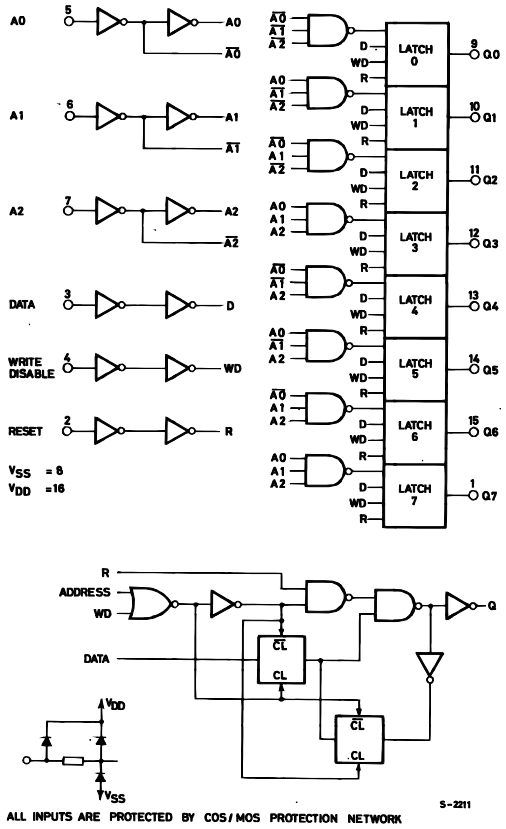

TIMING CHART

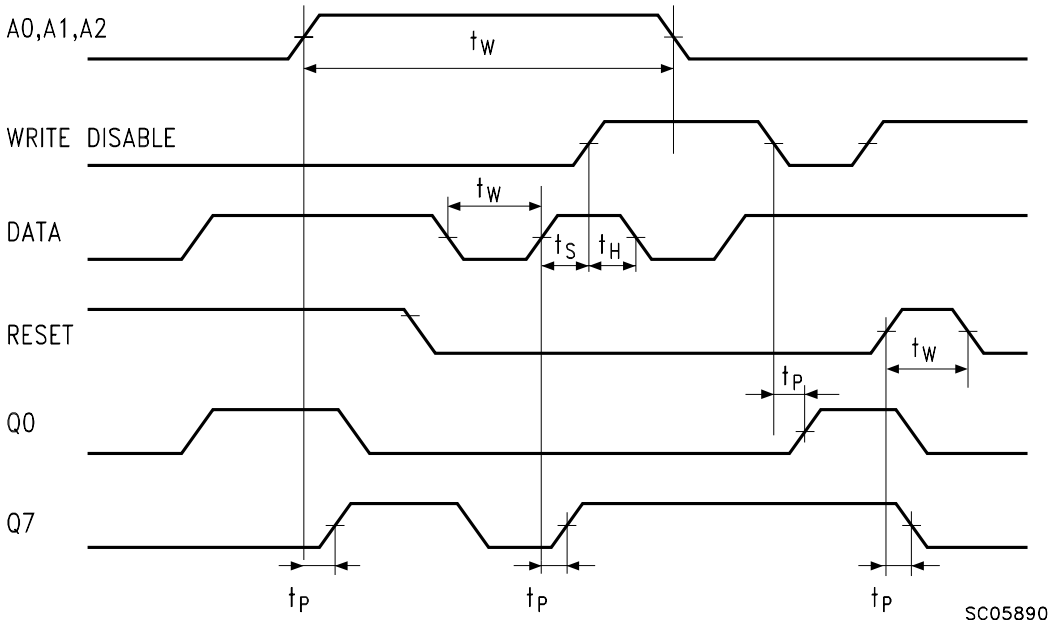

ABSOLUTE MAXIMUM RATINGS

Symbol	Parameter	Value	Unit
V_{DD}	Supply Voltage	-0.5 to +22	V
V_I	DC Input Voltage	-0.5 to V_{DD} + 0.5	V
I_I	DC Input Current	± 10	mA
P_D	Power Dissipation per Package	200	mW
	Power Dissipation per Output Transistor	100	mW
T_{op}	Operating Temperature	-55 to +125	°C
T_{stg}	Storage Temperature	-65 to +150	°C

Absolute Maximum Ratings are those values beyond which damage to the device may occur. Functional operation under these conditions is not implied.
All voltage values are referred to V_{SS} pin voltage.

RECOMMENDED OPERATING CONDITIONS

Symbol	Parameter	Value	Unit
V_{DD}	Supply Voltage	3 to 20	V
V_I	Input Voltage	0 to V_{DD}	V
T_{op}	Operating Temperature	-55 to 125	°C

DC SPECIFICATIONS

Symbol	Parameter	Test Conditions				Value							Unit
		V_I (V)	V_O (V)	$\|I_O\|$ (µA)	V_{DD} (V)	T_A = 25°C			-40 to 85°C		-55 to 125°C		
						Min.	Typ.	Max.	Min.	Max.	Min.	Max.	
I_L	Quiescent Current	0/5			5		0.04	5		150		150	µA
		0/10			10		0.04	10		300		300	
		0/15			15		0.04	20		600		600	
		0/20			20		0.08	100		3000		3000	
V_{OH}	High Level Output Voltage	0/5		<1	5	4.95			4.95		4.95		V
		0/10		<1	10	9.95			9.95		9.95		
		0/15		<1	15	14.95			14.95		14.95		
V_{OL}	Low Level Output Voltage	5/0		<1	5		0.05			0.05		0.05	V
		10/0		<1	10		0.05			0.05		0.05	
		15/0		<1	15		0.05			0.05		0.05	
V_{IH}	High Level Input Voltage		0.5/4.5	<1	5	3.5			3.5		3.5		V
			1/9	<1	10	7			7		7		
			1.5/18.5	<1	15	11			11		11		
V_{IL}	Low Level Input Voltage		0.5/4.5	<1	5			1.5		1.5		1.5	V
			9/1	<1	10			3		3		3	
			1.5/18.5	<1	15			4		4		4	
I_{OH}	Output Drive Current	0/5	2.5		5	-1.6	-3.2		-1.15		-1.15		mA
		0/5	4.6		5	-0.51	-1		-0.36		-0.36		
		0/10	9.5		10	-1.3	-2.6		-0.9		-0.9		
		0/15	13.5		15	-3.4	-6.8		-2.4		-2.4		
I_{OL}	Output Sink Current	0/5	0.4		5	0.51	1		0.36		0.36		mA
		0/10	0.5		10	1.3	2.6		0.9		0.9		
		0/15	1.5		15	3.0	6.8		2.4		2.4		
I_I	Input Leakage Current	0/18	any input		18		$\pm 10^{-5}$	±0.1		±1		±1	µA
C_I	Input Capacitance		any input				5	7.5					pF

The Noise Margin for both "1" and "0" level is: 1V min. with V_{DD}=5V, 2V min. with V_{DD}=10V, 2.5V min. with V_{DD}=15V

DYNAMIC ELECTRICAL CHARACTERISTICS (T_{amb} = 25°C, C_L = 50pF, R_L = 200KΩ, $t_r = t_f$ = 20 ns)

Symbol	Parameter	Test Condition		Value (*)			Unit
		V_{DD} (V)		Min.	Typ.	Max.	
t_{PLH} t_{PHL}	Propagation Delay Time (Data to Output)	5			200	400	ns
		10			75	150	
		15			50	100	
t_{PLH} t_{PHL}	Propagation Delay Time (Write Disable to Output)	5			200	400	ns
		10			80	160	
		15			60	120	
t_{PLH} t_{PHL}	Propagation Delay Time (Address to Output)	5			225	450	ns
		10			100	200	
		15			75	150	
t_{PHL}	Propagation Delay Time (Reset to Output)	5			175	350	ns
		10			80	160	
		15			65	130	
t_{THL} t_{TLH}	Transition Time (any output)	5			100	200	ns
		10			50	100	
		15			40	80	
t_W	Minimum Pulse WIdth (Data)	5			100	200	ns
		10			50	100	
		15			40	80	
t_W	Minimum Pulse WIdth (Address)	5			200	400	ns
		10			100	200	
		15			65	125	
t_W	Minimum Pulse WIdth (Reset)	5			75	150	ns
		10			40	75	
		15			25	50	
t_{setup}	Minimum Setup Time (Data to Write Disable)	5			50	100	ns
		10			25	50	
		15			20	35	
t_{hold}	Minimum Hold Time (Data to Write Disable)	5			75	150	ns
		10			40	75	
		15			25	50	

(*) Typical temperature coefficient for all V_{DD} value is 0.3 %/°C.

TEST CIRCUIT

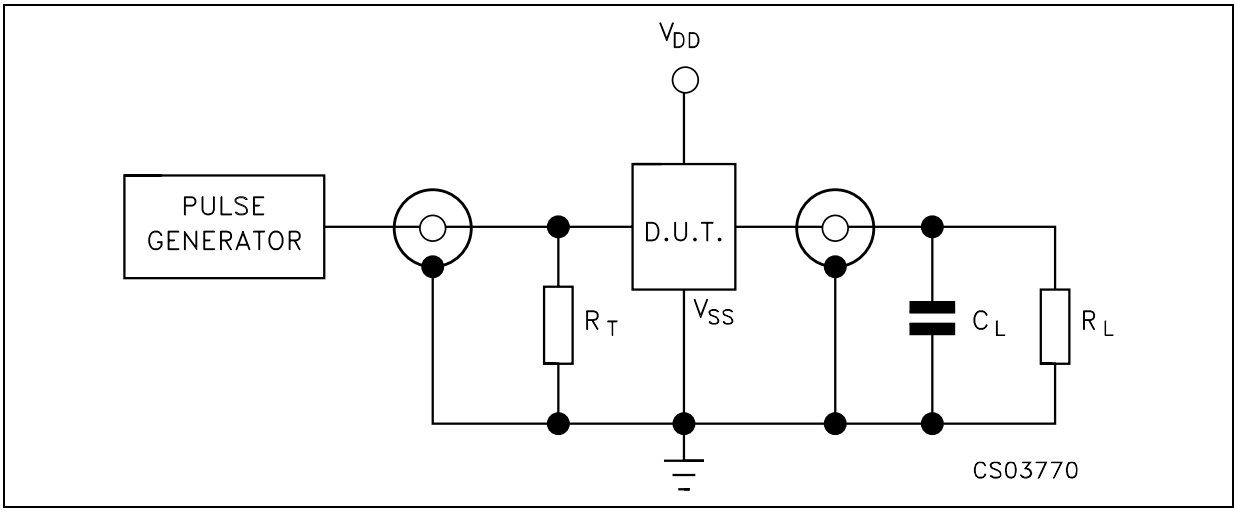

C_L = 50pF or equivalent (includes jig and probe capacitance)
R_L = 200KΩ
R_T = Z_{OUT} of pulse generator (typically 50Ω)

WAVEFORM 1 : PROPAGATION DELAY TIME (f=1MHz; 50% duty cycle)

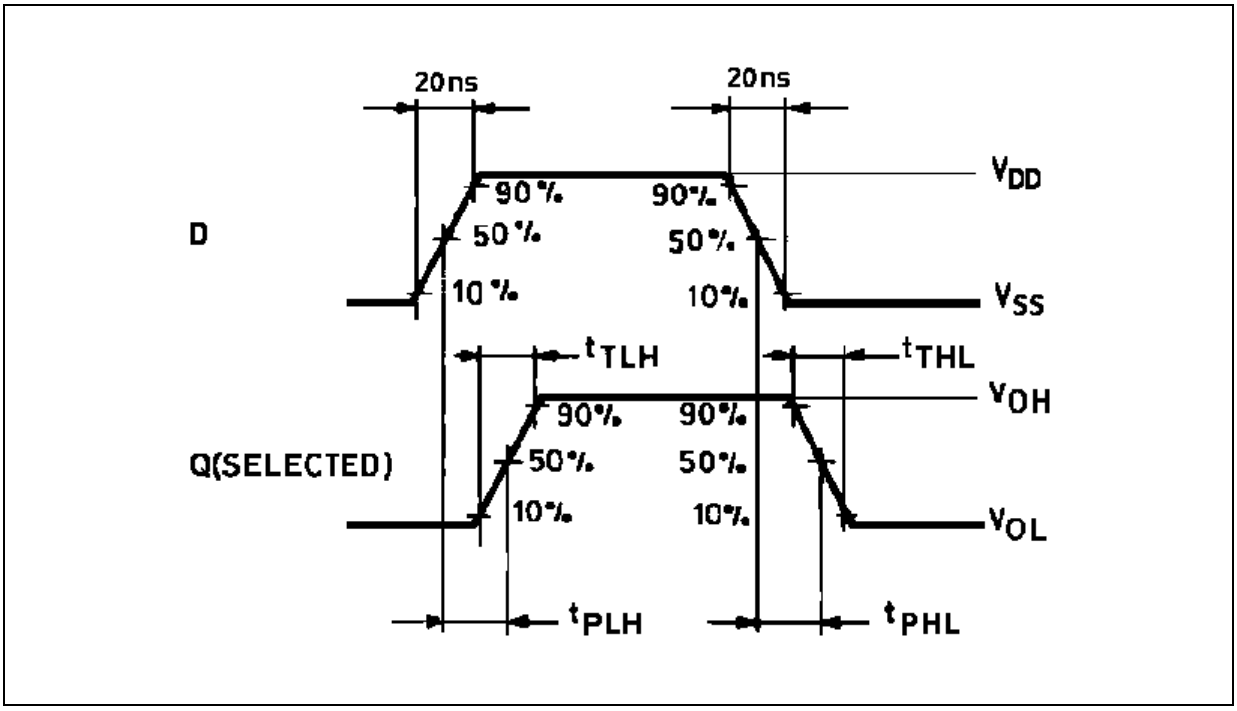

WAVEFORM 2 : PROPAGATION DELAY TIME (f=1MHz; 50% duty cycle)

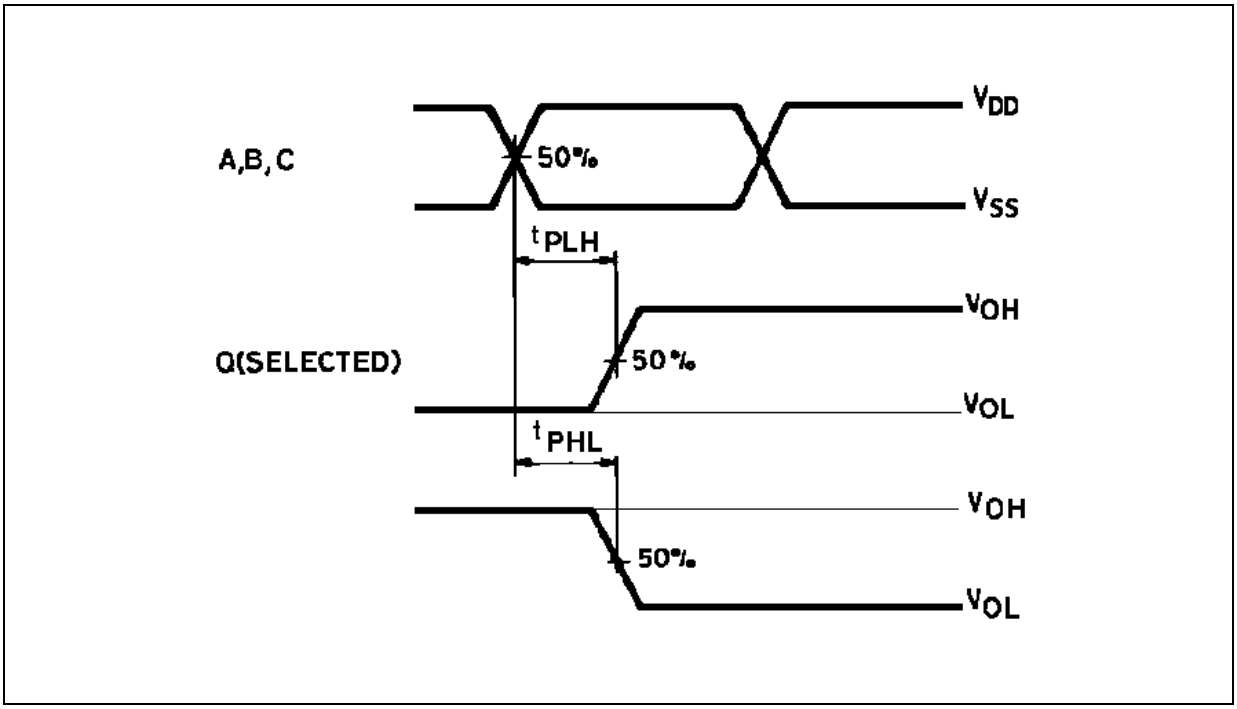

WAVEFORM 3 : MINIMUM PULSE WIDTH, SETUP AND HOLD TIME (f=1MHz; 50% duty cycle)

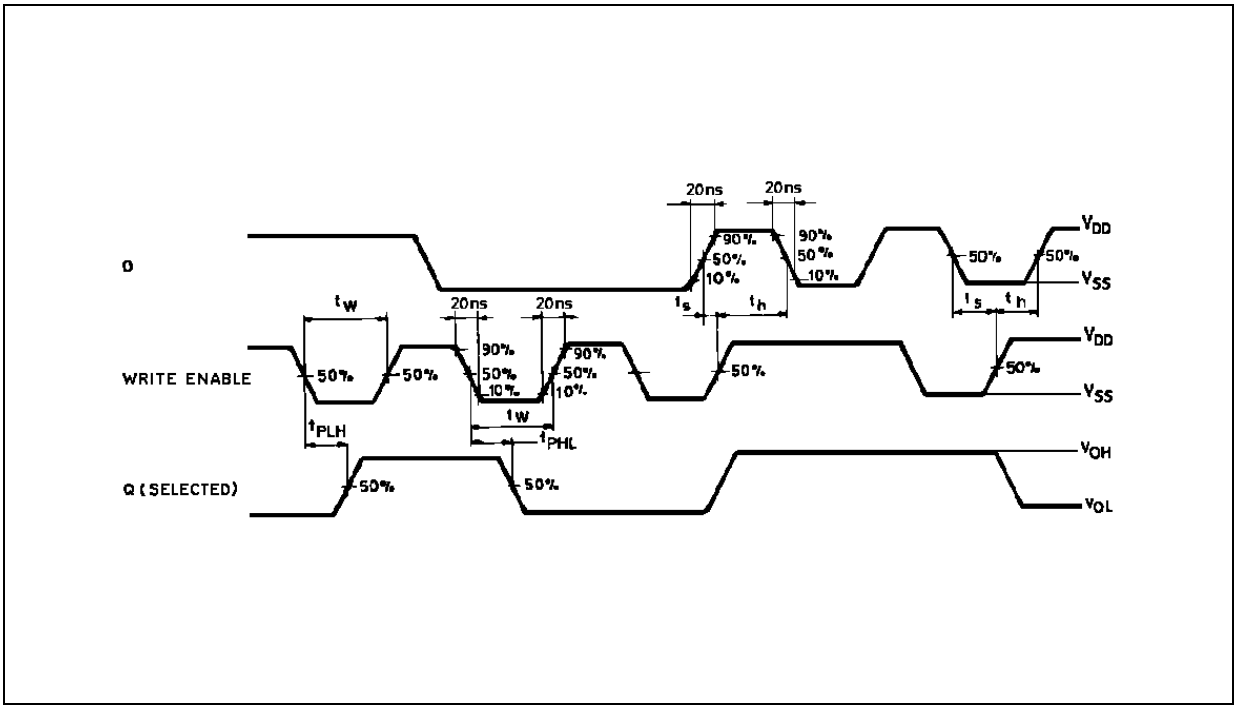

WAVEFORM 4 : MINIMUM PULSE WIDTH (f=1MHz; 50% duty cycle)

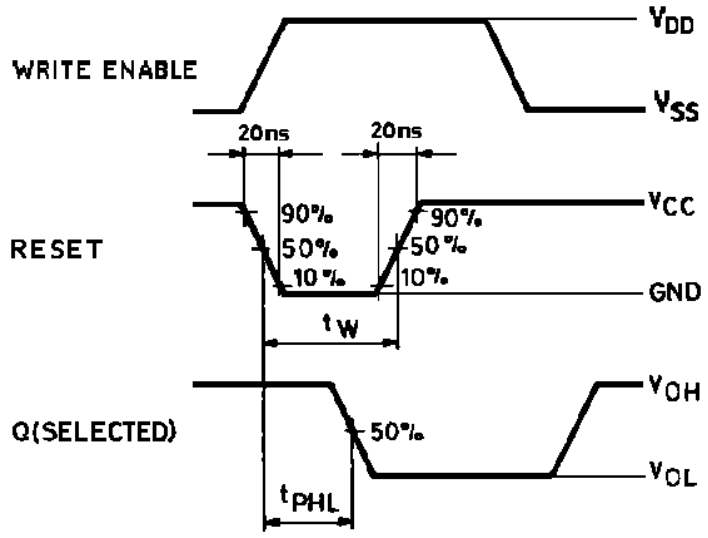

WAVEFORM 5 : SETUP AND HOLD TIME (f=1MHz; 50% duty cycle)

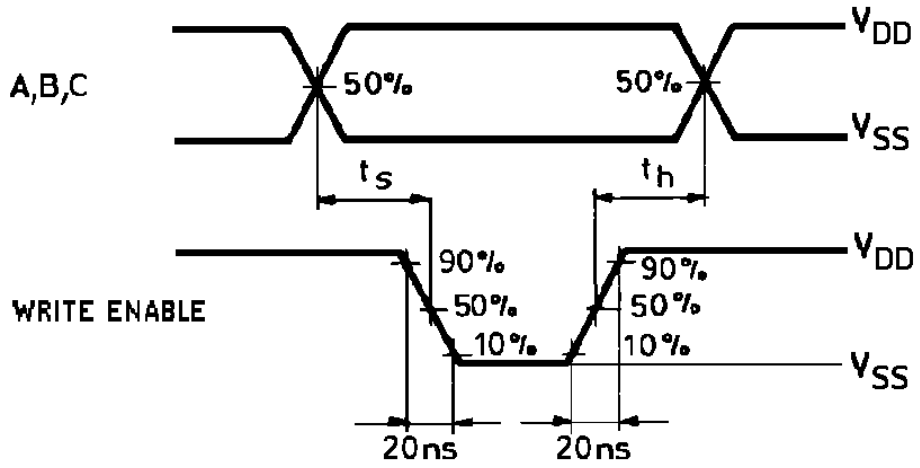

WAVEFORM 6 : INPUT WAVEFORMS (f=1MHz; 50% duty cycle)

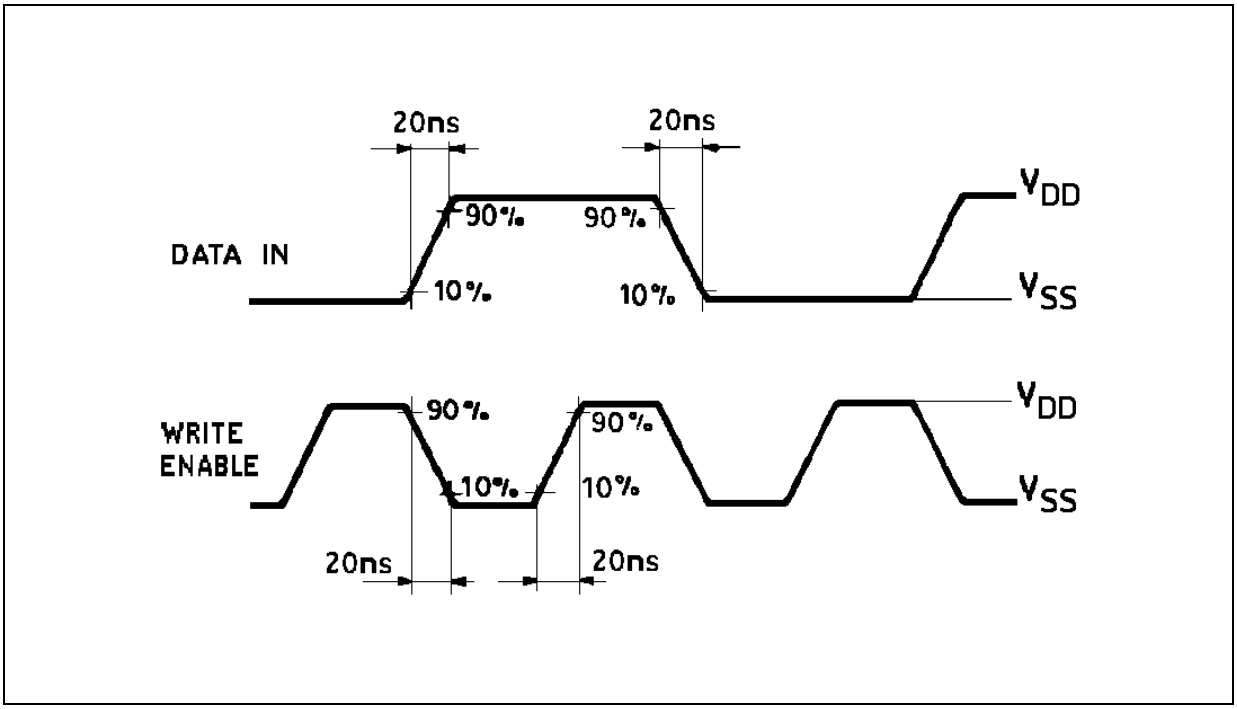

TYPICAL APPLICATIONS: MULTIPLE SELECTION DECODING - 4 x 4 CROSSPOINT SWITCH

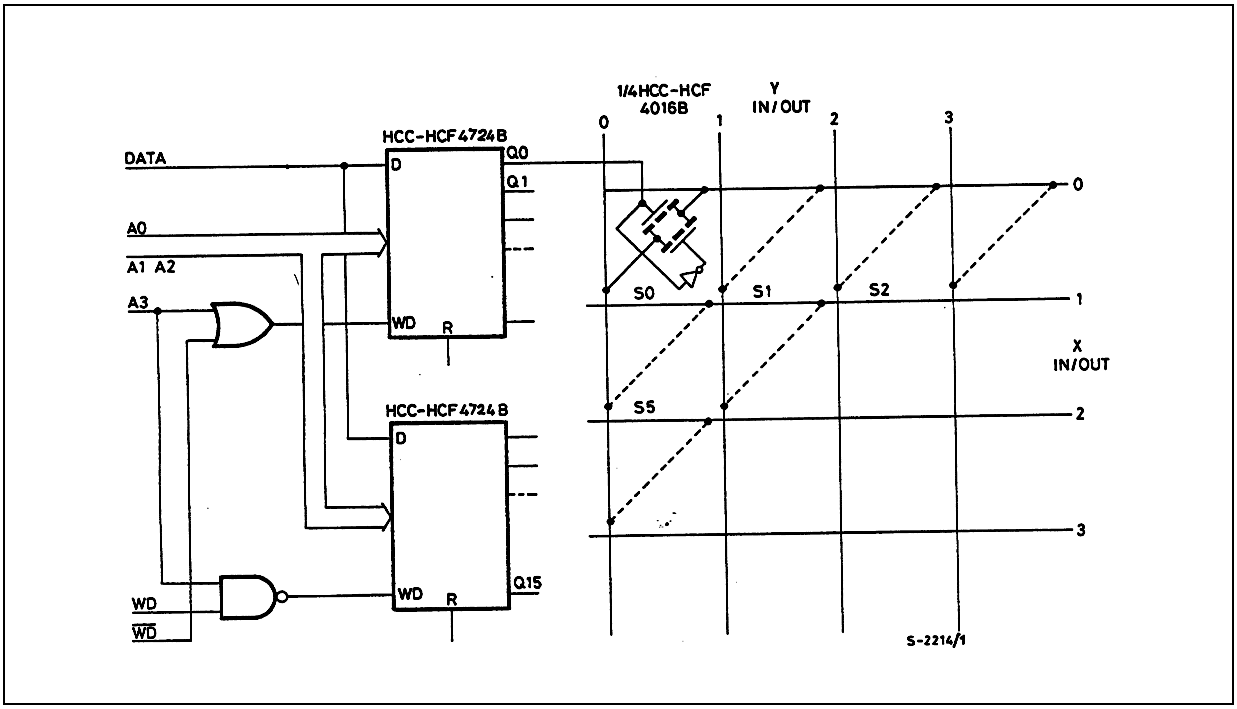

TYPICAL APPLICATIONS: A/D CONVERTER

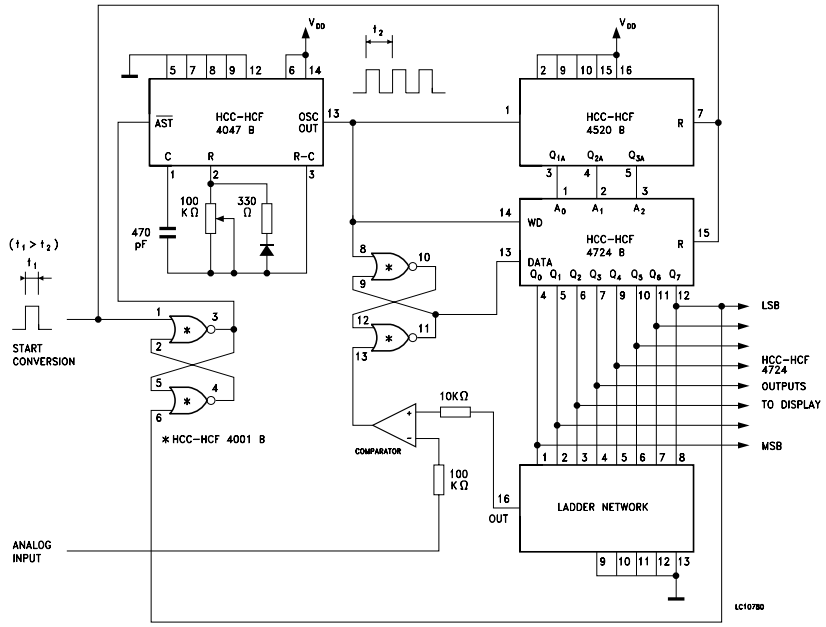

TYPICAL APPLICATIONS: DECODER/DEMULTIPLEXER

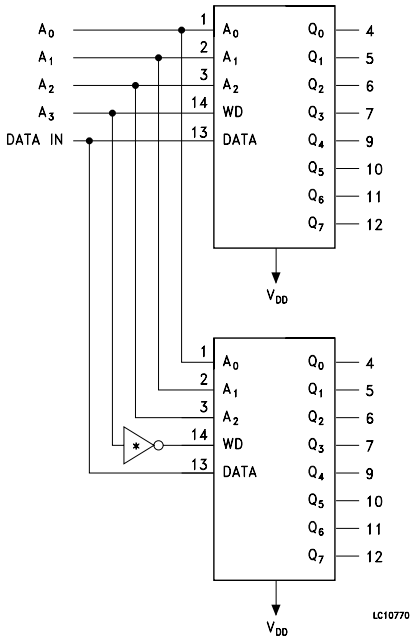

Plastic DIP-16 (0.25) MECHANICAL DATA

DIM.	mm.			inch		
	MIN.	TYP	MAX.	MIN.	TYP.	MAX.
a1	0.51			0.020		
B	0.77		1.65	0.030		0.065
b		0.5			0.020	
b1		0.25			0.010	
D			20			0.787
E		8.5			0.335	
e		2.54			0.100	
e3		17.78			0.700	
F			7.1			0.280
I			5.1			0.201
L		3.3			0.130	
Z			1.27			0.050

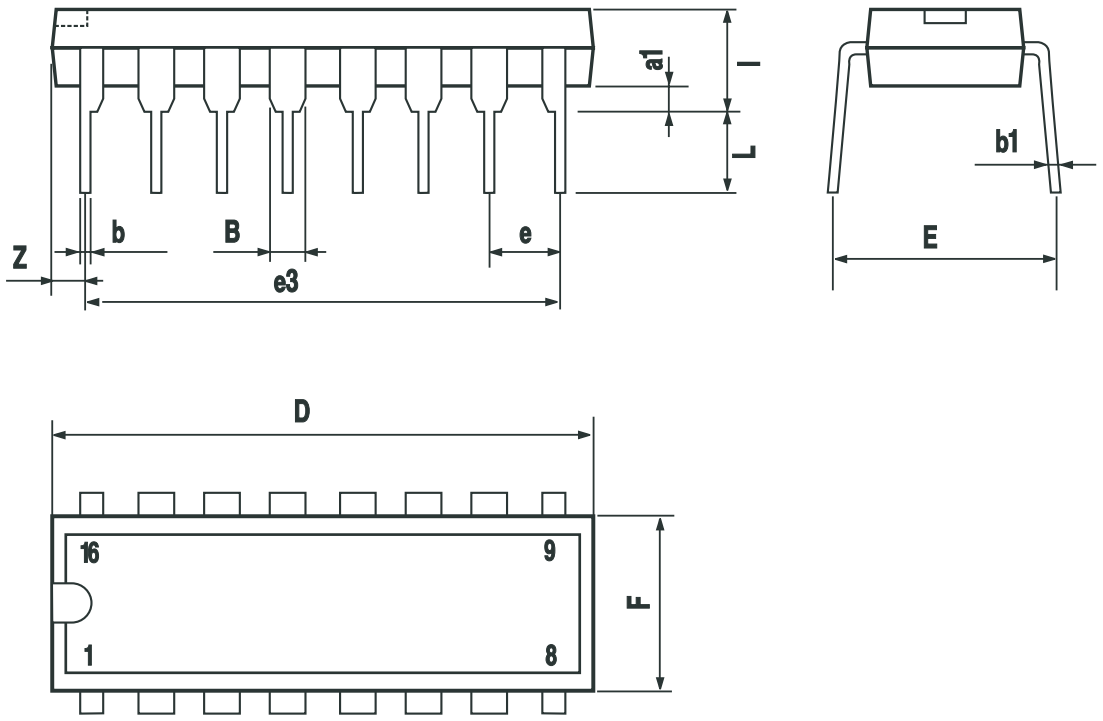

P001C

SO-16 MECHANICAL DATA

DIM.	mm.			inch		
	MIN.	TYP	MAX.	MIN.	TYP.	MAX.
A			1.75			0.068
a1	0.1		0.2	0.003		0.007
a2			1.65			0.064
b	0.35		0.46	0.013		0.018
b1	0.19		0.25	0.007		0.010
C		0.5			0.019	
c1	45° (typ.)					
D	9.8		10	0.385		0.393
E	5.8		6.2	0.228		0.244
e		1.27			0.050	
e3		8.89			0.350	
F	3.8		4.0	0.149		0.157
G	4.6		5.3	0.181		0.208
L	0.5		1.27	0.019		0.050
M			0.62			0.024
S	8° (max.)					

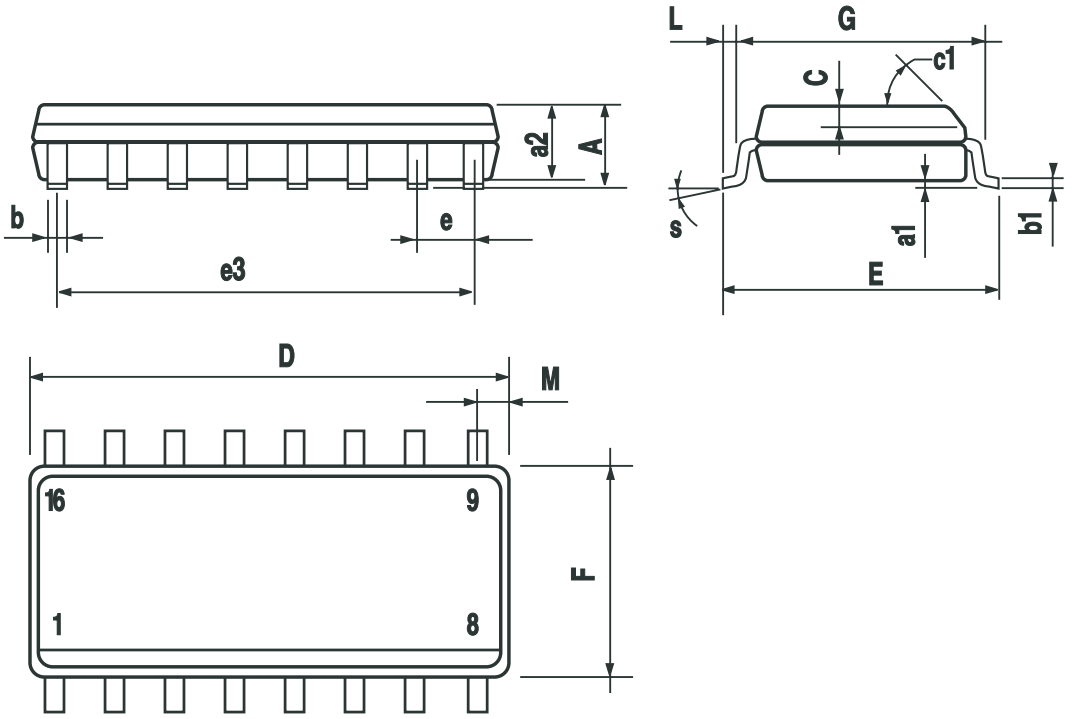

PO13H

Information furnished is believed to be accurate and reliable. However, STMicroelectronics assumes no responsibility for the consequences of use of such information nor for any infringement of patents or other rights of third parties which may result from its use. No license is granted by implication or otherwise under any patent or patent rights of STMicroelectronics. Specifications mentioned in this publication are subject to change without notice. This publication supersedes and replaces all information previously supplied. STMicroelectronics products are not authorized for use as critical components in life support devices or systems without express written approval of STMicroelectronics.

© The ST logo is a registered trademark of STMicroelectronics

© 2002 STMicroelectronics - Printed in Italy - All Rights Reserved
STMicroelectronics GROUP OF COMPANIES
Australia - Brazil - Canada - China - Finland - France - Germany - Hong Kong - India - Israel - Italy - Japan - Malaysia - Malta - Morocco
Singapore - Spain - Sweden - Switzerland - United Kingdom - United States.
© http://www.st.com