STB70NF02L

N-CHANNEL 20V - 0.006 Ω - 70A D²PAK
LOW GATE CHARGE STripFET™II POWER MOSFET

PRELIMINARY DATA

TYPE	V_{DSS}	$R_{DS(on)}$	I_D
STB70NF02L	20 V	<0.009Ω	70 A

- TYPICAL R_{DS}(on) = 0.016 Ω
- TYPICAL Q_g = 36 nC @ 10 V
- OPTIMAL $R_{DS(on)}$ x Qg TRADE-OFF
- CONDUCTION LOSSES REDUCED
- SWITCHING LOSSES REDUCED

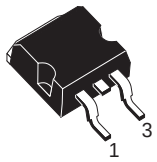

D²PAK
TO-263
(Suffix "T4")

ADD SUFFIX "T4" FOR ORDERING IN TAPE & REEL

DESCRIPTION

This application specific Power MOSFET is the third genaration of STMicroelectronis unique "Single Feature Size™" strip-based process. The resulting transistor shows the best trade-off between on-resistance and gate charge. When used as high and low side in buck regulators, it gives the best performance in terms of both conduction and switching losses. This is extremely important for motherboards where fast switching and high efficiency are of paramount importance.

APPLICATIONS

- SPECIFICALLY DESIGNED AND OPTIMISED FOR HIGH EFFICIENCY CPU CORE DC/DC CONVERTERS

INTERNAL SCHEMATIC DIAGRAM

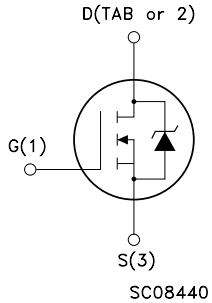

ABSOLUTE MAXIMUM RATINGS

Symbol	Parameter	Value	Unit
V_{DS}	Drain-source Voltage (V_{GS} = 0)	20	V
V_{DGR}	Drain-gate Voltage (R_{GS} = 20 kΩ)	20	V
V_{GS}	Gate- source Voltage	± 18	V
I_D	Drain Current (continuous) at T_C = 25°C	70	A
I_D	Drain Current (continuous) at T_C = 100°C	50	A
I_{DM}(•)	Drain Current (pulsed)	280	A
P_{tot}	Total Dissipation at T_C = 25°C	100	W
	Derating Factor	0.67	W/°C
T_{stg}	Storage Temperature	-65 to 175	°C
T_j	Max. Operating Junction Temperature	175	°C

(•) Pulse width limited by safe operating area

This is preliminary information on a new product now in development or undergoing evaluation. Details are subject to change without notice.

THERMAL DATA

Rthj-case	Thermal Resistance Junction-case	Max	1.5	°C/W
Rthj-amb	Thermal Resistance Junction-ambient	Max	62.5	°C/W
T_l	Maximum Lead Temperature For Soldering Purpose	Typ	300	°C

ELECTRICAL CHARACTERISTICS (T_{case} = 25 °C unless otherwise specified)

OFF

Symbol	Parameter	Test Conditions	Min.	Typ.	Max.	Unit
$V_{(BR)DSS}$	Drain-source Breakdown Voltage	I_D = 250 µA V_{GS} = 0	20			V
I_{DSS}	Zero Gate Voltage Drain Current (V_{GS} = 0)	V_{DS} = Max Rating V_{DS} = Max Rating T_C = 125°C			1 10	µA µA
I_{GSS}	Gate-body Leakage Current (V_{DS} = 0)	V_{GS} = ± 18V			±100	nA

ON (*)

Symbol	Parameter	Test Conditions	Min.	Typ.	Max.	Unit
$V_{GS(th)}$	Gate Threshold Voltage	V_{DS} = V_{GS} I_D = 250 µA	1			V
$R_{DS(on)}$	Static Drain-source On Resistance	V_{GS} = 10 V I_D = 35 A V_{GS} = 5 V I_D = 18 A		0.006 0.011	0.009 0.015	Ω Ω

DYNAMIC

Symbol	Parameter	Test Conditions	Min.	Typ.	Max.	Unit
g_{fs} (*)	Forward Transconductance	V_{DS}>$I_{D(on)}$x$R_{DS(on)max}$ I_D=35 A		40		S
C_{iss} C_{oss} C_{rss}	Input Capacitance Output Capacitance Reverse Transfer Capacitance	V_{DS} = 25V, f = 1 MHz, V_{GS} = 0		1500 900 200		pF pF pF

ELECTRICAL CHARACTERISTICS (continued)

SWITCHING ON

Symbol	Parameter	Test Conditions	Min.	Typ.	Max.	Unit
$t_{d(on)}$ t_r	Turn-on Delay Time Rise Time	V_{DD} = 10 V I_D = 35 A R_G = 4.7 Ω V_{GS} = 4.5 V (Resistive Load, Figure 3)		480		ns ns
Q_g Q_{gs} Q_{gd}	Total Gate Charge Gate-Source Charge Gate-Drain Charge	V_{DD} =16 V I_D =46 A V_{GS} =10V		36 5 10	45	nC nC nC

SWITCHING OFF

Symbol	Parameter	Test Conditions	Min.	Typ.	Max.	Unit
$t_{d(off)}$ t_f	Turn-off Delay Time Fall Time	V_{DD} = 10 V I_D = 35 A R_G = 4.7Ω, V_{GS} = 4.5 V (Resistive Load, Figure 3)		30 110		ns ns

SOURCE DRAIN DIODE

Symbol	Parameter	Test Conditions	Min.	Typ.	Max.	Unit
I_{SD} I_{SDM} (•)	Source-drain Current Source-drain Current (pulsed)				70 280	A A
V_{SD} (*)	Forward On Voltage	I_{SD} = 70 A V_{GS} = 0			1.2	V
t_{rr} Q_{rr} I_{RRM}	Reverse Recovery Time Reverse Recovery Charge Reverse Recovery Current	I_{SD} = 70 A di/dt = 100A/µs V_{DD} = 15 V T_j = 150°C (see test circuit, Figure 5)		60 100 2		ns nC A

(*)Pulsed: Pulse duration = 300 µs, duty cycle 1.5 %.
(•)Pulse width limited by safe operating area.

Fig. 1: Unclamped Inductive Load Test Circuit

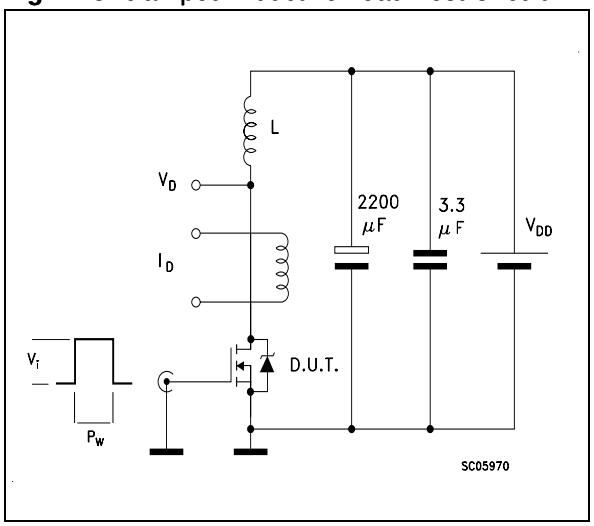

Fig. 2: Unclamped Inductive Waveform

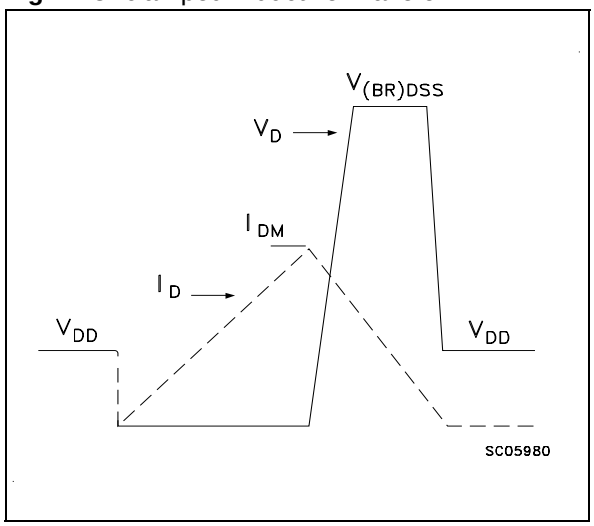

Fig. 3: Switching Times Test Circuits For Resistive Load

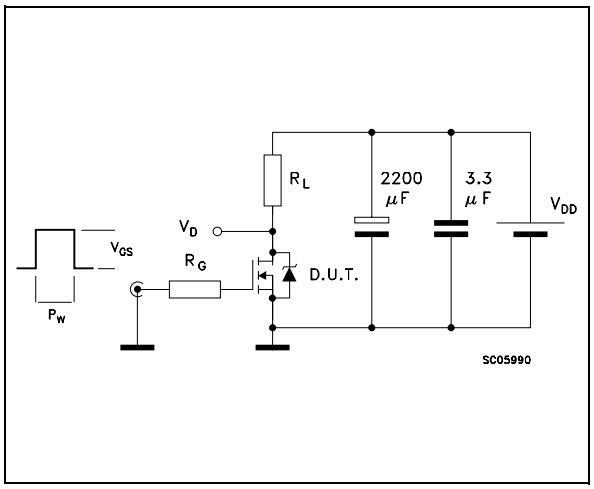

Fig. 4: Gate Charge test Circuit

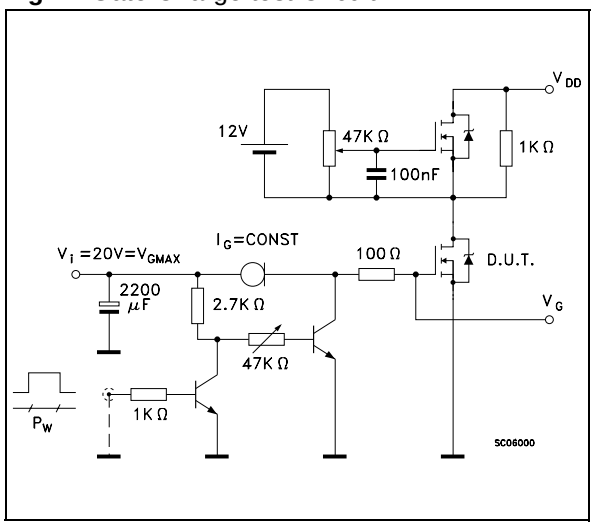

Fig. 5: Test Circuit For Inductive Load Switching And Diode Recovery Times

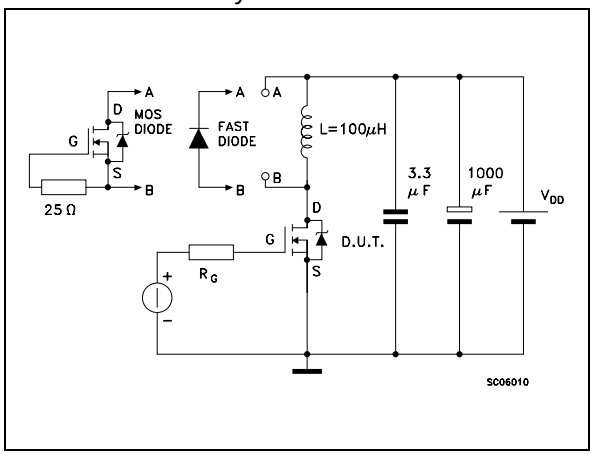

D²PAK MECHANICAL DATA

DIM.	mm.			inch.		
	MIN.	TYP.	MAX.	MIN.	TYP.	TYP.
A	4.4		4.6	0.173		0.181
A1	2.49		2.69	0.098		0.106
A2	0.03		0.23	0.001		0.009
B	0.7		0.93	0.028		0.037
B2	1.14		1.7	0.045		0.067
C	0.45		0.6	0.018		0.024
C2	1.21		1.36	0.048		0.054
D	8.95		9.35	0.352		0.368
D1		8			0.315	
E	10		10.4	0.394		0.409
E1	8.5				0.334	
G	4.88		5.28	0.192		0.208
L	15		15.85	0.591		0.624
L2	1.27		1.4	0.050		0.055
L3	1.4		1.75	0.055		0.069
M	2.4		3.2	0.094		0.126
R		0.4			0.016	
V2	0°		4°	0°		4°

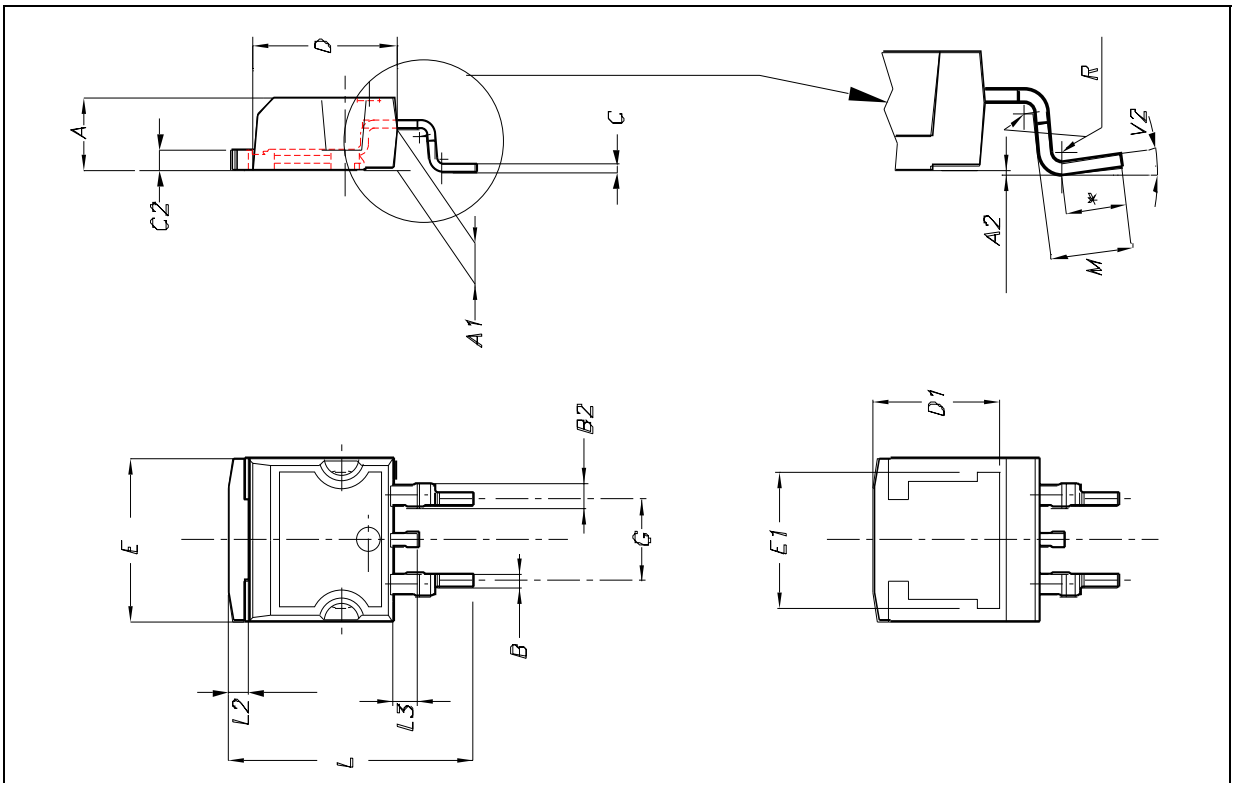

D²PAK FOOTPRINT

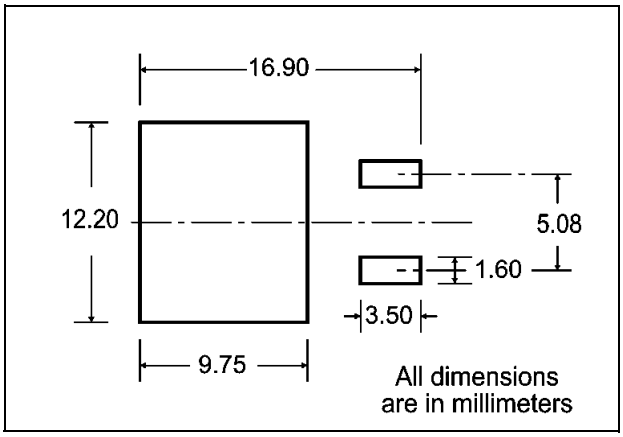

TUBE SHIPMENT (no suffix)*

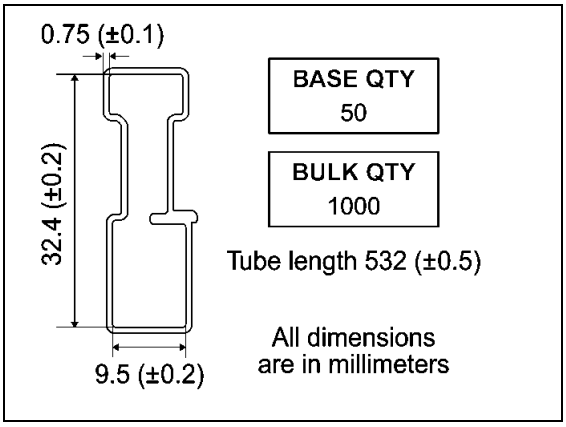

TAPE AND REEL SHIPMENT (suffix "T4")*

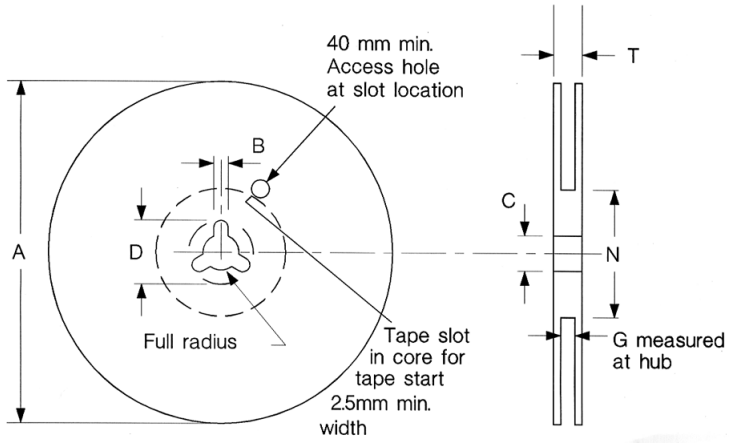

REEL MECHANICAL DATA

DIM.	mm		inch	
	MIN.	MAX.	MIN.	MAX.
A		330		12.992
B	1.5		0.059	
C	12.8	13.2	0.504	0.520
D	20.2		0.795	
G	24.4	26.4	0.960	1.039
N	100		3.937	
T		30.4		1.197

BASE QTY	BULK QTY
1000	1000

TAPE MECHANICAL DATA

DIM.	mm		inch	
	MIN.	MAX.	MIN.	MAX.
A0	10.5	10.7	0.413	0.421
B0	15.7	15.9	0.618	0.626
D	1.5	1.6	0.059	0.063
D1	1.59	1.61	0.062	0.063
E	1.65	1.85	0.065	0.073
F	11.4	11.6	0.449	0.456
K0	4.8	5.0	0.189	0.197
P0	3.9	4.1	0.153	0.161
P1	11.9	12.1	0.468	0.476
P2	1.9	2.1	0075	0.082
R	50		1.574	
T	0.25	0.35	.0.0098	0.0137
W	23.7	24.3	0.933	0.956

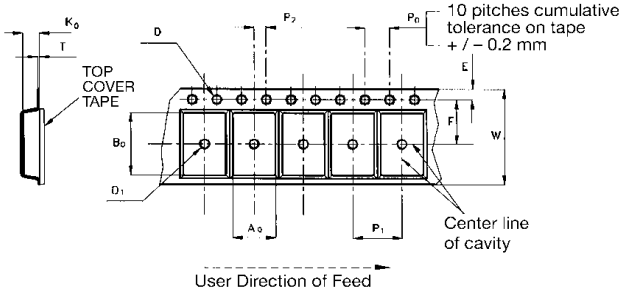

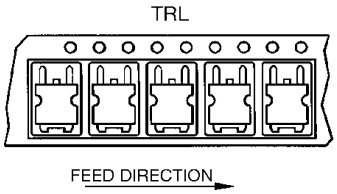

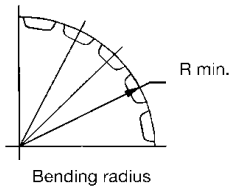

* on sales type

Information furnished is believed to be accurate and reliable. However, STMicroelectronics assumes no responsibility for the consequences of use of such information nor for any infringement of patents or other rights of third parties which may result from its use. No license is granted by implication or otherwise under any patent or patent rights of STMicroelectronics. Specifications mentioned in this publication are subject to change without notice. This publication supersedes and replaces all information previously supplied. STMicroelectronics products are not authorized for use as critical components in life support devices or systems without express written approval of STMicroelectronics.

The ST logo is registered trademark of STMicroelectronics
® 2002 STMicroelectronics - All Rights Reserved

All other names are the property of their respective owners.

STMicroelectronics GROUP OF COMPANIES
Australia - Brazil - Canada - China - Finland - France - Germany - Hong Kong - India - Israel - Italy - Japan - Malaysia - Malta - Morocco - Singapore - Spain - Sweden - Switzerland - United Kingdom - United States.

http://www.st.com