STP8NC70Z - STP8NC70ZFP
STB8NC70Z - STB8NC70Z-1

N-CHANNEL 700V - 0.90Ω - 6.8A TO-220/FP/D²PAK/I²PAK
Zener-Protected PowerMESH™III MOSFET

TYPE	V_{DSS}	$R_{DS(on)}$	I_D
STP8NC70Z/FP	700V	< 1.2 Ω	6.8 A
STB8NC70Z/-1	700V	< 1.2 Ω	6.8 A

- TYPICAL R_{DS}(on) = 0.9 Ω
- EXTREMELY HIGH dv/dt AND CAPABILITY
- GATE-TO- SOURCE ZENER DIODES
- 100% AVALANCHE TESTED
- VERY LOW GATE INPUT RESISTANCE
- GATE CHARGE MINIMIZED

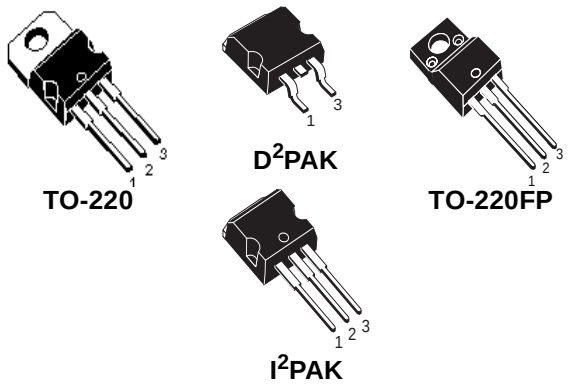

DESCRIPTION

The third generation of MESH OVERLAY™ Power MOSFETs for very high voltage exhibits unsurpassed on-resistance per unit area while integrating back-to-back Zener diodes between gate and source. Such arrangement gives extra ESD capability with higher ruggedness performance as requested by a large variety of single-switch applications.

APPLICATIONS

- SINGLE-ENDED SMPS IN MONITORS, COMPUTER AND INDUSTRIAL APPLICATION
- WELDING EQUIPMENT

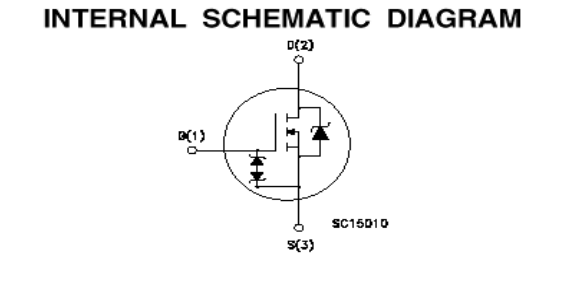

ABSOLUTE MAXIMUM RATINGS

Symbol	Parameter	Value		Unit
		STP(B)8NC70Z(-1)	STP8NC70ZFP	
V_{DS}	Drain-source Voltage (V_{GS} = 0)	700		V
V_{DGR}	Drain-gate Voltage (R_{GS} = 20 kΩ)	700		V
V_{GS}	Gate- source Voltage	± 25		V
I_D	Drain Current (continuous) at T_C = 25°C	6.8	6.8(*)	A
I_D	Drain Current (continuous) at T_C = 100°C	4.3	4.3(*)	A
I_{DM} (•)	Drain Current (pulsed)	27	27(*)	A
P_{TOT}	Total Dissipation at T_C = 25°C	135	40	W
	Derating Factor	1.08	0.32	W/°C
I_{GS}	Gate-source Current (DC)	±50		mA
$V_{ESD(G-S)}$	Gate source ESD(HBM-C=100pF, R=15KΩ)	3		KV
dv/dt(1)	Peak Diode Recovery voltage slope	3		V/ns
V_{ISO}	Insulation Winthstand Voltage (DC)	--	2000	V
T_{stg}	Storage Temperature	–65 to 150		°C
T_j	Max. Operating Junction Temperature	150		°C

(•)Pulse width limited by safe operating area

(1)I_{SD} ≤6.8A, di/dt ≤100A/µs, V_{DD} ≤ $V_{(BR)DSS}$, T_j ≤ T_{JMAX}

(*)Pulse width Limited by maximum temperature allowed

THERMAL DATA

		TO-220 / D^2PAK I^2PAK	TO-220FP	
Rthj-case	Thermal Resistance Junction-case Max	0.93	3.13	°C/W
Rthj-amb	Thermal Resistance Junction-ambient Max	62.5		°C/W
T_l	Maximum Lead Temperature For Soldering Purpose	300		°C

AVALANCHE CHARACTERISTICS

Symbol	Parameter	Max Value	Unit
I_{AR}	Avalanche Current, Repetitive or Not-Repetitive (pulse width limited by T_j max)	6.8	A
E_{AS}	Single Pulse Avalanche Energy (starting T_j = 25 °C, I_D = I_{AR}, V_{DD} = 50 V)	354	mJ

ELECTRICAL CHARACTERISTICS (TCASE = 25 °C UNLESS OTHERWISE SPECIFIED)

OFF

Symbol	Parameter	Test Conditions	Min.	Typ.	Max.	Unit
$V_{(BR)DSS}$	Drain-source Breakdown Voltage	I_D = 250 µA, V_{GS} = 0	700			V
$\Delta BV_{DSS}/\Delta T_J$	Breakdown Voltage Temp. Coefficient	I_D = 1 mA, V_{GS} = 0		0.8		V/°C
I_{DSS}	Zero Gate Voltage Drain Current (V_{GS} = 0)	V_{DS} = Max Rating			1	µA
		V_{DS} = Max Rating, T_C = 125 °C			50	µA
I_{GSS}	Gate-body Leakage Current (V_{DS} = 0)	V_{GS} = ±20V			±10	µA

ON (1)

Symbol	Parameter	Test Conditions	Min.	Typ.	Max.	Unit
$V_{GS(th)}$	Gate Threshold Voltage	V_{DS} = V_{GS}, I_D = 250µA	3	4	5	V
$R_{DS(on)}$	Static Drain-source On Resistance	V_{GS} = 10V, I_D = 3.75 A		0.90	1.2	Ω

DYNAMIC

Symbol	Parameter	Test Conditions	Min.	Typ.	Max.	Unit
g_{fs} (1)	Forward Transconductance	V_{DS} > $I_{D(on)}$ x $R_{DS(on)max}$, I_D = 3.75A		6		S
C_{iss}	Input Capacitance	V_{DS} = 25V, f = 1 MHz, V_{GS} = 0		2350		pF
C_{oss}	Output Capacitance			180		pF
C_{rss}	Reverse Transfer Capacitance			22		pF

ELECTRICAL CHARACTERISTICS (CONTINUED)

SWITCHING ON

Symbol	Parameter	Test Conditions	Min.	Typ.	Max.	Unit
$t_{d(on)}$	Turn-on Delay Time	V_{DD} = 350 V, I_D = 37.5 A R_G = 4.7Ω V_{GS} = 10V (see test circuit, Figure 3)		30		ns
t_r	Rise Time			10		ns
Q_g	Total Gate Charge	V_{DD} = 560V, I_D = 7.5 A, V_{GS} = 10V		55	77	nC
Q_{gs}	Gate-Source Charge			14		nC
Q_{gd}	Gate-Drain Charge			21		nC

SWITCHING OFF

Symbol	Parameter	Test Conditions	Min.	Typ.	Max.	Unit
$t_{r(Voff)}$	Off-voltage Rise Time	V_{DD} = 560V, I_D = 7.5 A, R_G = 4.7Ω, V_{GS} = 10V (see test circuit, Figure 5)		15		ns
t_f	Fall Time			12		ns
t_c	Cross-over Time			20		ns

SOURCE DRAIN DIODE

Symbol	Parameter	Test Conditions	Min.	Typ.	Max.	Unit
I_{SD}	Source-drain Current				6.8	A
I_{SDM} (2)	Source-drain Current (pulsed)				27	A
V_{SD} (1)	Forward On Voltage	I_{SD} = 6.8 A, V_{GS} = 0			1.6	V
t_{rr}	Reverse Recovery Time	I_{SD} = 7.5 A, di/dt = 100A/µs, V_{DD} = 30V, T_j = 150°C (see test circuit, Figure 5)		680		ns
Q_{rr}	Reverse Recovery Charge			7.1		µC
I_{RRM}	Reverse Recovery Current			21		A

GATE-SOURCE ZENER DIODE

Symbol	Parameter	Test Conditions	Min.	Typ.	Max.	Unit
BV_{GSO}	Gate-Source Breakdown Voltage	Igs=± 1mA (Open Drain)	25			V
αT	Voltage Thermal Coefficient	T=25°C Note(3)		1.3		10^{-4}/°C
Rz	Dynamic Resistance	I_D = 50 mA,		90		Ω

Note: 1. Pulsed: Pulse duration = 300 µs, duty cycle 1.5 %.
2. Pulse width limited by safe operating area.
3. $\Delta V_{BV} = \alpha T\ (25°\text{-}T)\ BV_{GSO}(25°)$

PROTECTION FEATURES OF GATE-TO-SOURCE ZENER DIODES

The built-in back-to-back Zener diodes have specifically been designed to enhance not only the device's ESD capability, but also to make them safely absorb possible voltage transients that may occasionally be applied from gate to source. In this respect the Zener voltage is appropriate to achieve an efficient and cost-effective intervention to protect the device's integrity. These integrated Zener diodes thus avoid the usage of external components.

Safe Operating Area For TO-220/D²PAK/I²PAK

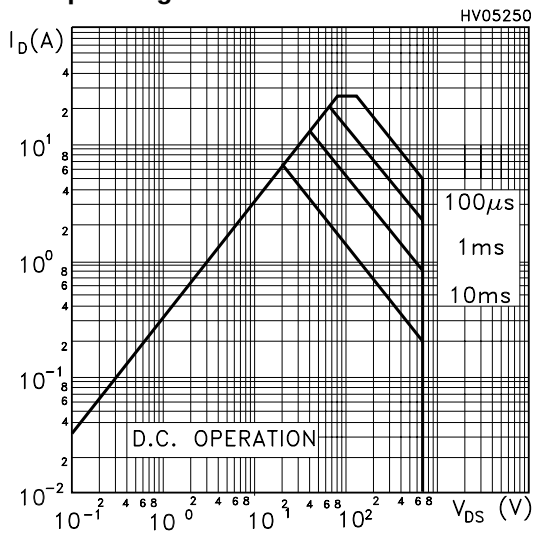

Safe Operating Area For TO-220FP

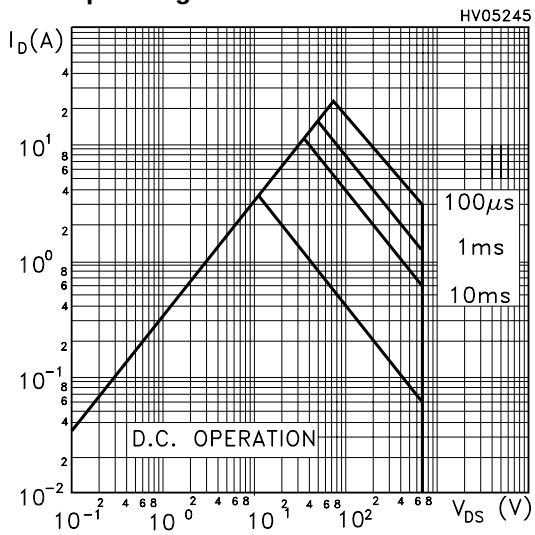

Thermal Impedance For TO-220/D²PAK/I²PAK

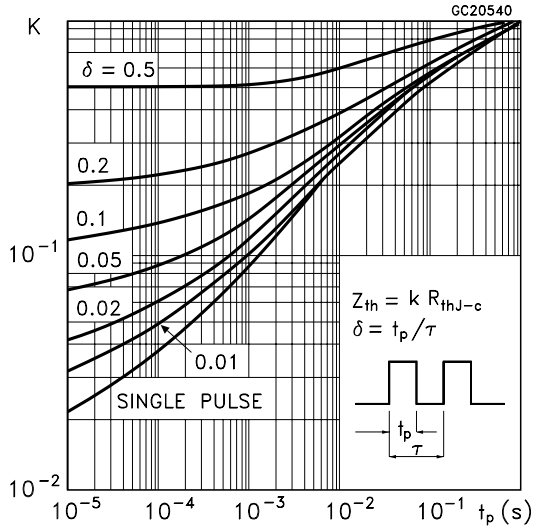

Thermal Impedance For TO-220FP

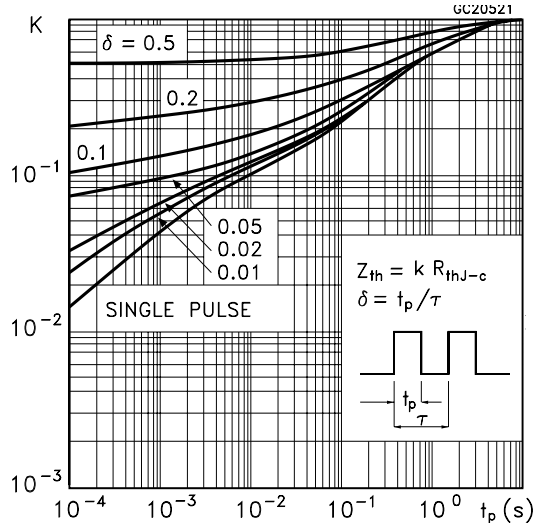

Output Characteristics

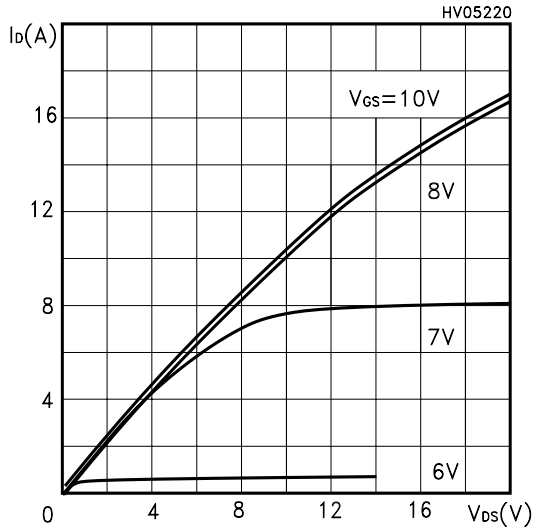

Transfer Characteristics

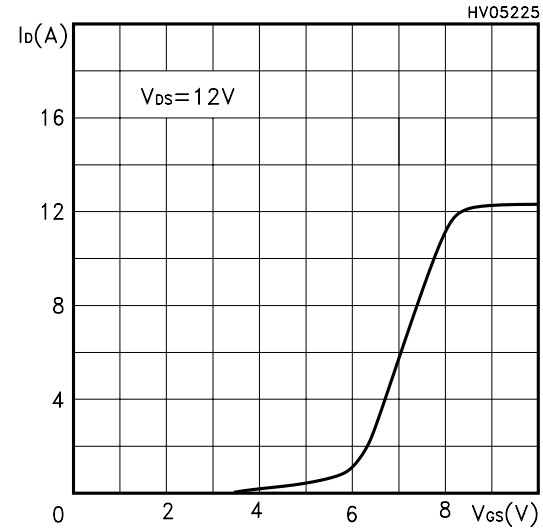

Transconductance

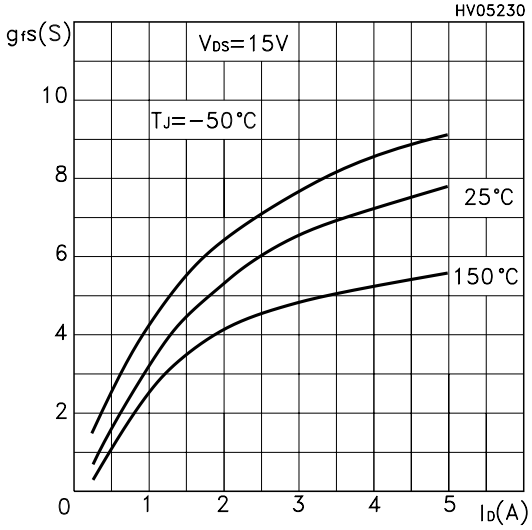

Static Drain-source On Resistance

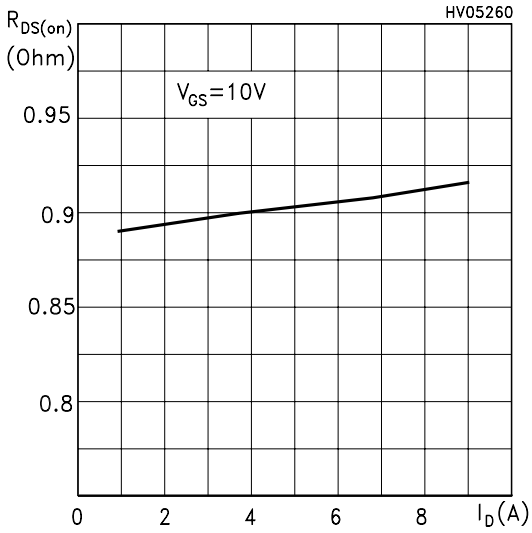

Gate Charge vs Gate-source Voltage

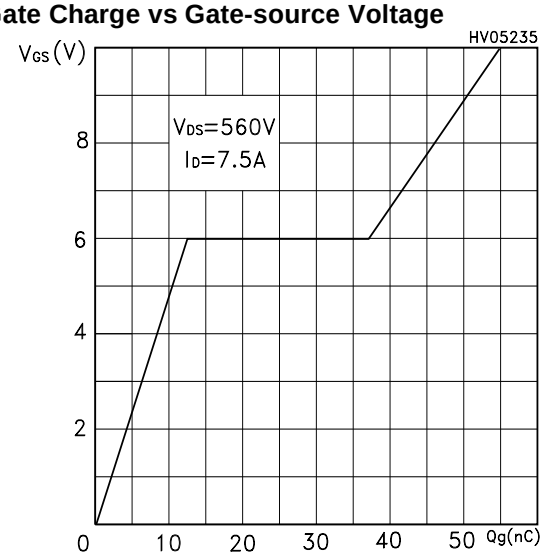

Capacitance Variations

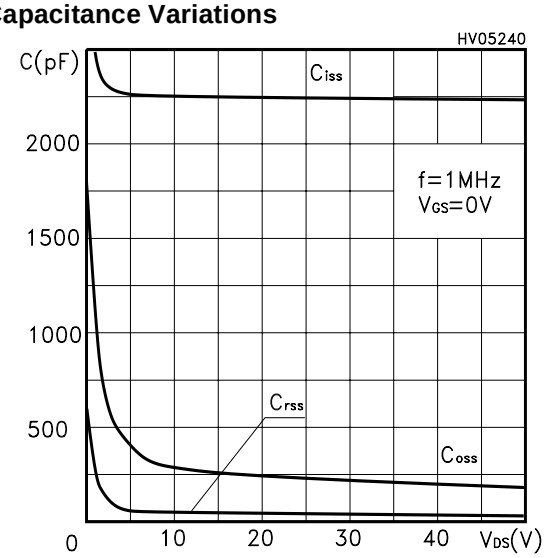

Normalized Gate Threshold Voltage vs Temp.

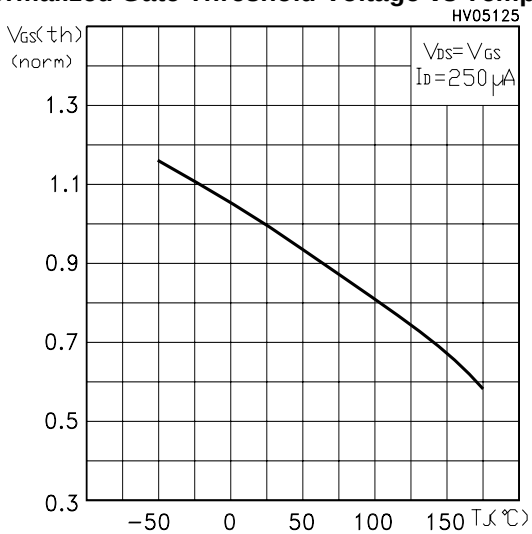

Normalized On Resistance vs Temperature

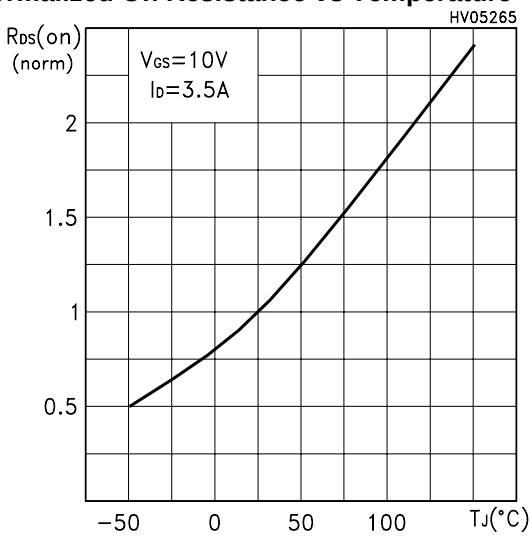

Source-drain Diode Forward Characteristics

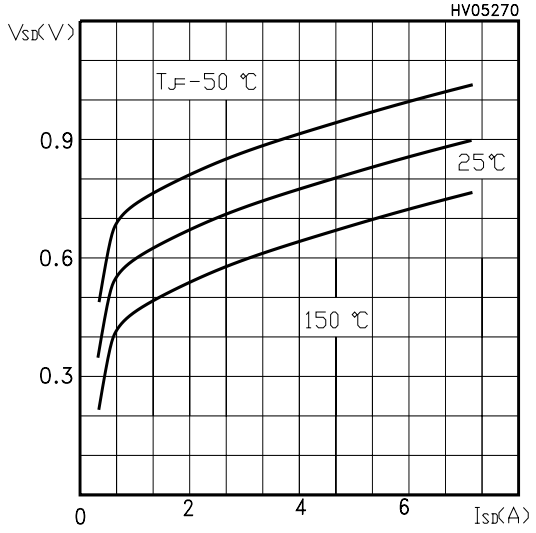

Fig. 1: Unclamped Inductive Load Test Circuit

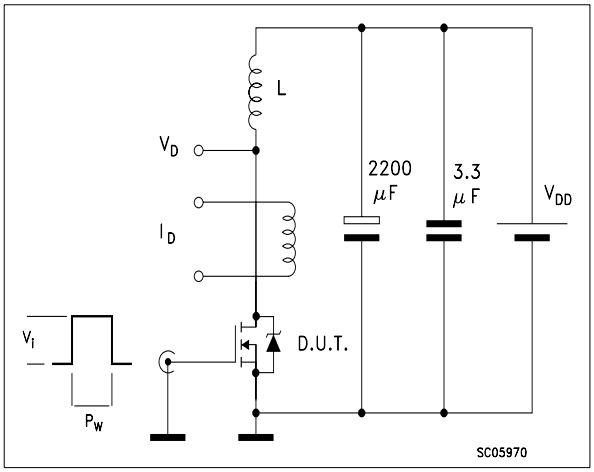

Fig. 2: Unclamped Inductive Waveform

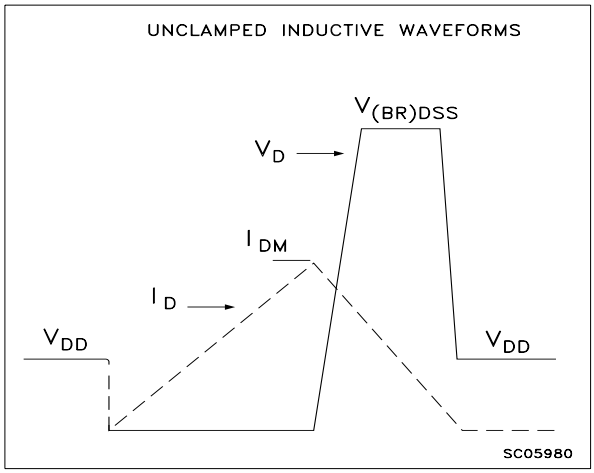

Fig. 3: Switching Times Test Circuits For Resistive Load

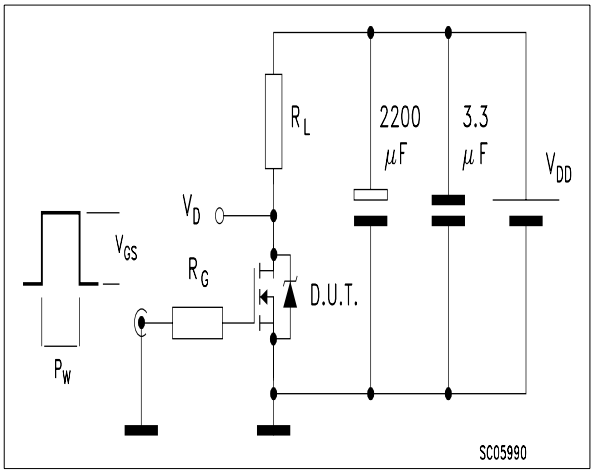

Fig. 4: Gate Charge test Circuit

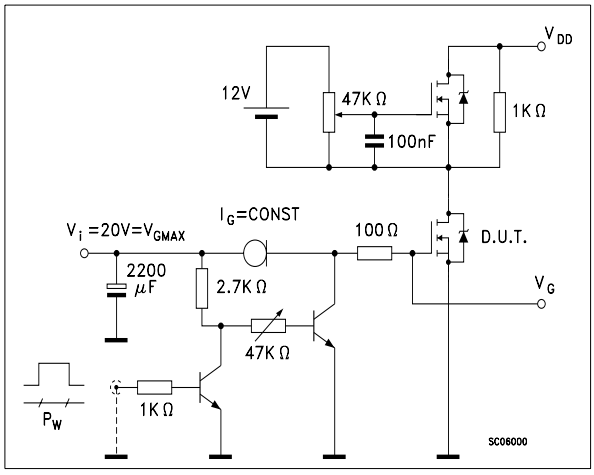

Fig. 5: Test Circuit For Inductive Load Switching And Diode Recovery Times

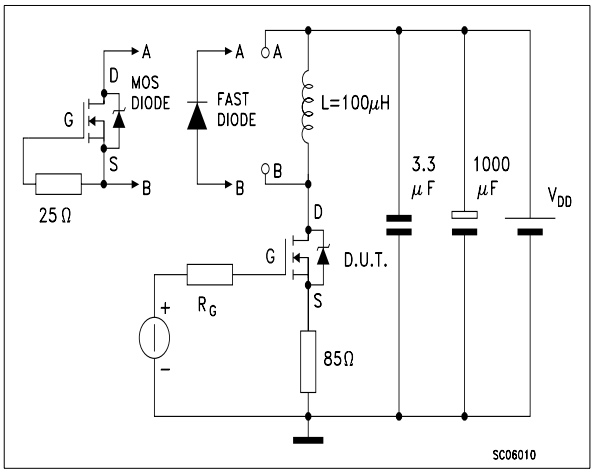

TO-220 MECHANICAL DATA

DIM.	mm			inch		
	MIN.	TYP.	MAX.	MIN.	TYP.	MAX.
A	4.40		4.60	0.173		0.181
C	1.23		1.32	0.048		0.051
D	2.40		2.72	0.094		0.107
D1		1.27			0.050	
E	0.49		0.70	0.019		0.027
F	0.61		0.88	0.024		0.034
F1	1.14		1.70	0.044		0.067
F2	1.14		1.70	0.044		0.067
G	4.95		5.15	0.194		0.203
G1	2.4		2.7	0.094		0.106
H2	10.0		10.40	0.393		0.409
L2		16.4			0.645	
L4	13.0		14.0	0.511		0.551
L5	2.65		2.95	0.104		0.116
L6	15.25		15.75	0.600		0.620
L7	6.2		6.6	0.244		0.260
L9	3.5		3.93	0.137		0.154
DIA.	3.75		3.85	0.147		0.151

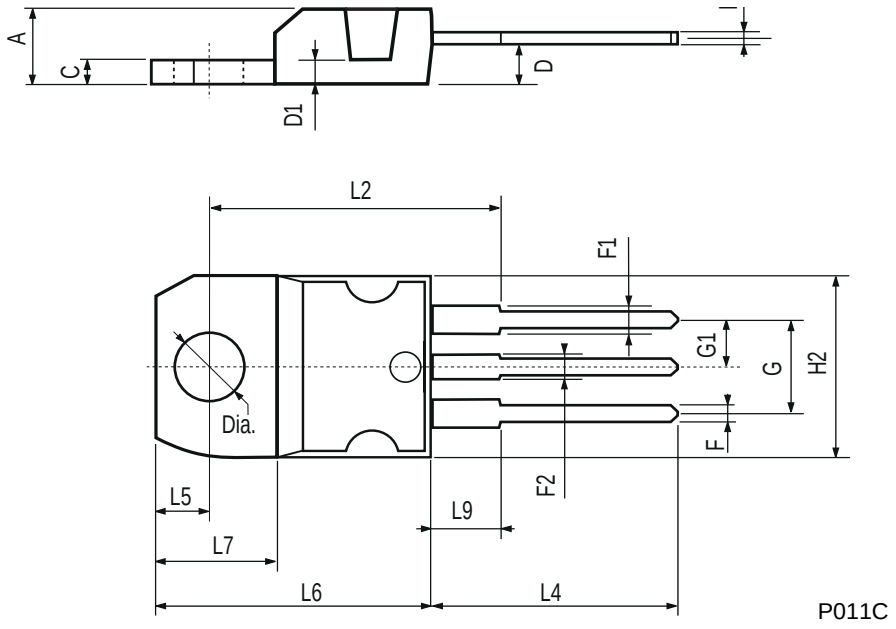

TO-220FP MECHANICAL DATA

DIM.	mm			inch		
	MIN.	TYP.	MAX.	MIN.	TYP.	MAX.
A	4.4		4.6	0.173		0.181
B	2.5		2.7	0.098		0.106
D	2.5		2.75	0.098		0.108
E	0.45		0.7	0.017		0.027
F	0.75		1	0.030		0.039
F1	1.15		1.7	0.045		0.067
F2	1.15		1.7	0.045		0.067
G	4.95		5.2	0.195		0.204
G1	2.4		2.7	0.094		0.106
H	10		10.4	0.393		0.409
L2		16			0.630	
L3	28.6		30.6	1.126		1.204
L4	9.8		10.6	0.385		0.417
L6	15.9		16.4	0.626		0.645
L7	9		9.3	0.354		0.366
Ø	3		3.2	0.118		0.126

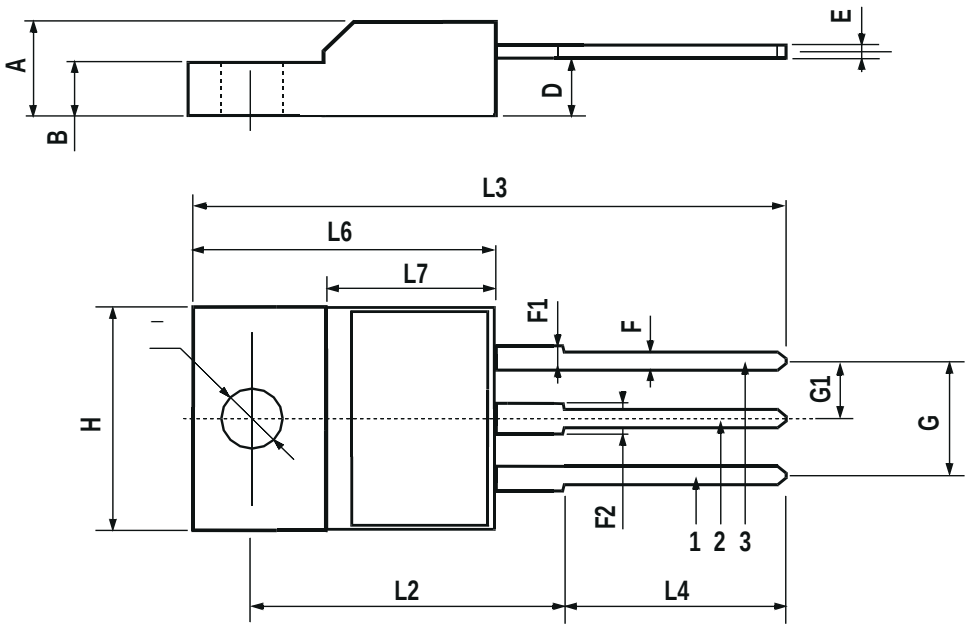

TO-262 (I^2PAK) MECHANICAL DATA

DIM.	mm			inch		
	MIN.	TYP.	MAX.	MIN.	TYP.	MAX.
A	4.4		4.6	0.173		0.181
A1	2.49		2.69	0.098		0.106
B	0.7		0.93	0.027		0.036
B2	1.14		1.7	0.044		0.067
C	0.45		0.6	0.017		0.023
C2	1.23		1.36	0.048		0.053
D	8.95		9.35	0.352		0.368
e	2.4		2.7	0.094		0.106
E	10		10.4	0.393		0.409
L	13.1		13.6	0.515		0.531
L1	3.48		3.78	0.137		0.149
L2	1.27		1.4	0.050		0.055

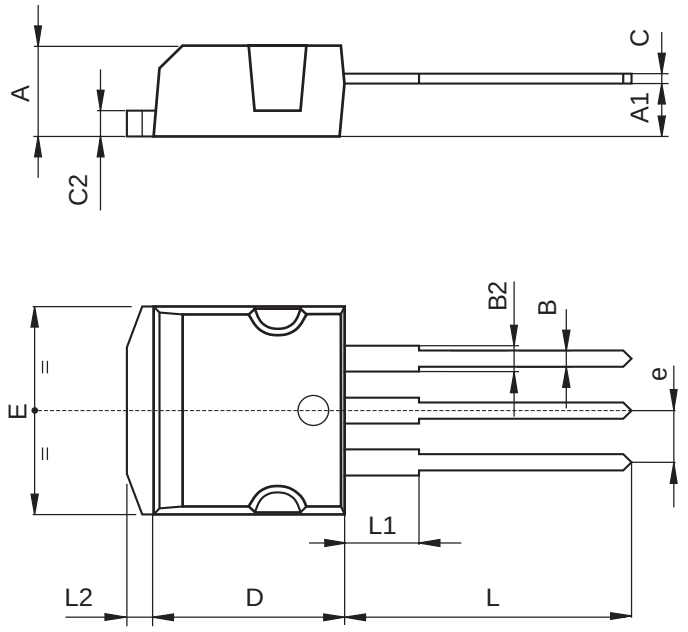

P011P5/E

D^2PAK MECHANICAL DATA

DIM.	mm.			inch		
	MIN.	TYP	MAX.	MIN.	TYP.	MAX.
A	4.4		4.6	0.173		0.181
A1	2.49		2.69	0.098		0.106
A2	0.03		0.23	0.001		0.009
B	0.7		0.93	0.027		0.036
B2	1.14		1.7	0.044		0.067
C	0.45		0.6	0.017		0.023
C2	1.23		1.36	0.048		0.053
D	8.95		9.35	0.352		0.368
D1		8			0.315	
E	10		10.4	0.393		
E1		8.5			0.334	
G	4.88		5.28	0.192		0.208
L	15		15.85	0.590		0.625
L2	1.27		1.4	0.050		0.055
L3	1.4		1.75	0.055		0.068
M	2.4		3.2	0.094		0.126
R		0.4			0.015	
V2	0º		4º			

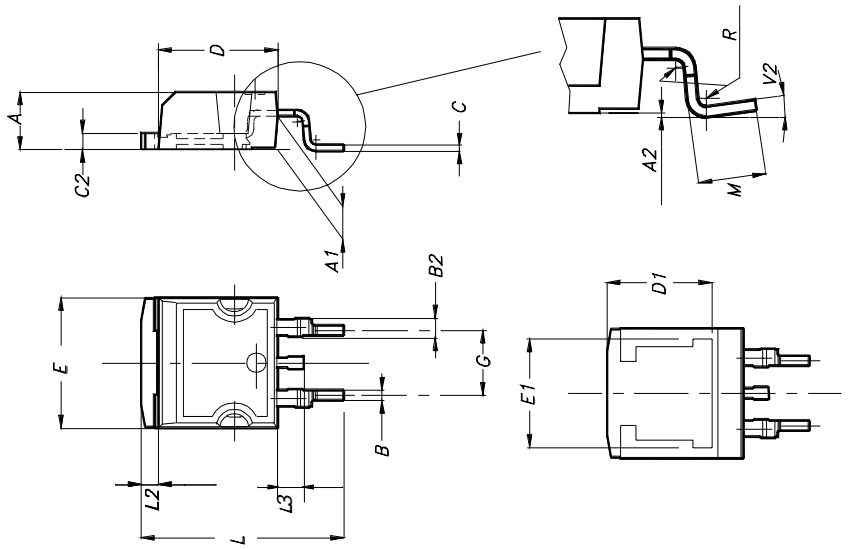

D²PAK FOOTPRINT

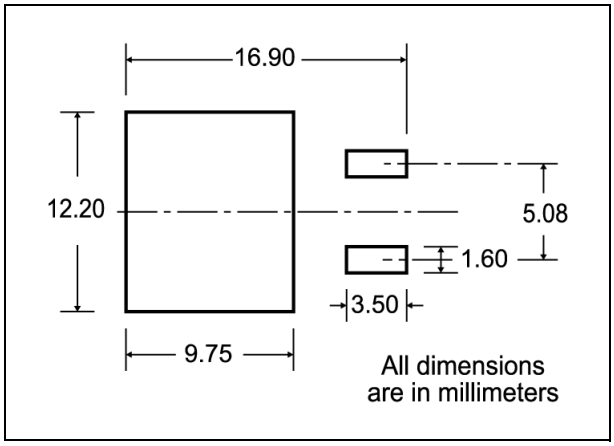

TUBE SHIPMENT (no suffix)*

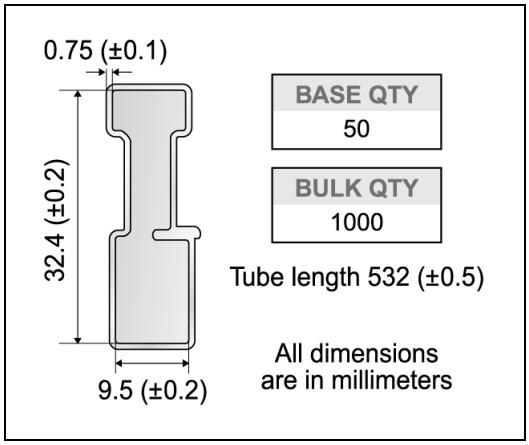

TAPE AND REEL SHIPMENT (suffix "T4")*

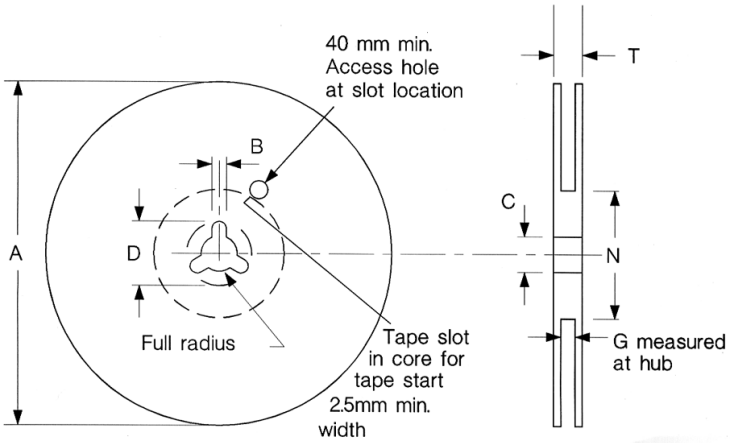

REEL MECHANICAL DATA

DIM.	mm		inch	
	MIN.	MAX.	MIN.	MAX.
A		330		12.992
B	1.5		0.059	
C	12.8	13.2	0.504	0.520
D	20.2		0795	
G	24.4	26.4	0.960	1.039
N	100		3.937	
T		30.4		1.197

BASE QTY	BULK QTY
1000	1000

TAPE MECHANICAL DATA

DIM.	mm		inch	
	MIN.	MAX.	MIN.	MAX.
A0	10.5	10.7	0.413	0.421
B0	15.7	15.9	0.618	0.626
D	1.5	1.6	0.059	0.063
D1	1.59	1.61	0.062	0.063
E	1.65	1.85	0.065	0.073
F	11.4	11.6	0.449	0.456
K0	4.8	5.0	0.189	0.197
P0	3.9	4.1	0.153	0.161
P1	11.9	12.1	0.468	0.476
P2	1.9	2.1	0.075	0.082
R	50		1.574	
T	0.25	0.35	0.0098	0.0137
W	23.7	24.3	0.933	0.956

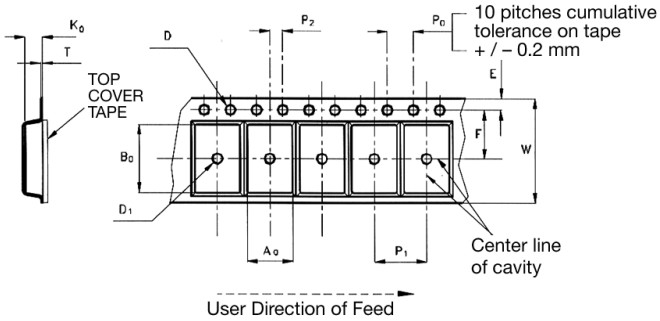

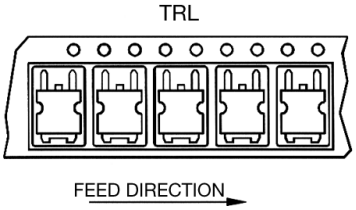

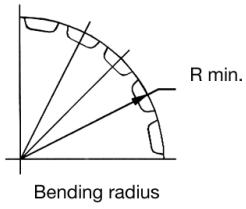

* on sales type

Information furnished is believed to be accurate and reliable. However, STMicroelectronics assumes no responsibility for the consequences of use of such information nor for any infringement of patents or other rights of third parties which may result from its use. No license is granted by implication or otherwise under any patent or patent rights of STMicroelectronics. Specifications mentioned in this publication are subject to change without notice. This publication supersedes and replaces all information previously supplied. STMicroelectronics products are not authorized for use as critical components in life support devices or systems without express written approval of STMicroelectronics.

© The ST logo is a registered trademark of STMicroelectronics

© 2002 STMicroelectronics - Printed in Italy - All Rights Reserved
STMicroelectronics GROUP OF COMPANIES
Australia - Brazil - Canada - China - Finland - France - Germany - Hong Kong - India - Israel - Italy - Japan - Malaysia - Malta - Morocco
Singapore - Spain - Sweden - Switzerland - United Kingdom - United States.
© http://www.st.com