To all our customers

Regarding the change of names mentioned in the document, such as Mitsubishi Electric and Mitsubishi XX, to Renesas Technology Corp.

The semiconductor operations of Hitachi and Mitsubishi Electric were transferred to Renesas Technology Corporation on April 1st 2003. These operations include microcomputer, logic, analog and discrete devices, and memory chips other than DRAMs (flash memory, SRAMs etc.) Accordingly, although Mitsubishi Electric, Mitsubishi Electric Corporation, Mitsubishi Semiconductors, and other Mitsubishi brand names are mentioned in the document, these names have in fact all been changed to Renesas Technology Corp. Thank you for your understanding. Except for our corporate trademark, logo and corporate statement, no changes whatsoever have been made to the contents of the document, and these changes do not constitute any alteration to the contents of the document itself.

Note : Mitsubishi Electric will continue the business operations of high frequency & optical devices and power devices.

Renesas Technology Corp.
Customer Support Dept.
April 1, 2003

MITSUBISHI 16-BIT SINGLE-CHIP MICROCOMPUTER
M16C FAMILY
M32C/80 SERIES

M32C/80 GROUP

Draft Specification

Rev 0.10 : September 13, 2002
Rev 0.11 : September 19, 2002
Rev 0.12 : November 20, 2002

Specifications written in this manual are believed to be accurate, but are not guaranteed to be entirely free of error.
Specifications in this manual may be changed for functional or performance improvements. Please make sure your manual is the latest edition.

RENESAS
Renesas Technology Corp.

About M32C/80 Group

The M32C/80 group of single-chip microcomputers use the high-performance silicon gate CMOS process. They use the M32C/80 Series CPU core and are packaged in a 100-pin plastic molded QFP. This single-chip microcomputer operates using sophisticated instructions. With 16M bytes of address space, it is capable of executing instructions at high speed. Because of its high level of ROM efficiency, the size of external ROM can be reduced to about half. In addition, this microcomputer contains peripheral functions such as multiplier and DMAC which combined with fast instruction processing capability, makes it suitable for control of various OA, communication, and industrial equipment which requires high-speed arithmetic/logic operations.

Applications

Audio, cameras, office equipment, communications equipment, portable equipment, etc.

------ Table of Contents -----

Performance Outline

Table 1.1.1 shows a performance outline of M32C/80 group.

Table 1.1.1. Performance outline of M32C/80 group (100-pin version)

Item			Performance
CPU	Number of basic instructions		108 instructions
	Shortest instruction execution time		33 ns(f(XIN)=30MHz)
	Operation mode		Microprocessor mode
	Memory space		16 M bytes
	Memory capacity		See ROM/RAM expansion figure.
Peripheral function	I/O port		47 pins (8 bits separate bus P1, P6 to P10 except P85)
	Input port		1 pin (P85)
	Multifunction timer	Output	16 bits x 5 (TA0, TA1, TA2, TA3, TA4)
		Input	16 bits x 6 (TB0, TB1, TB2, TB3, TB4, TB5)
	Three phase motor control circuit		1 circuit
	HDLC data process		2 channels
	Serial I/O		5 channels (UART0 to UART4) IE Bus(Note 1), I2C Bus (Note 2)
	A-D converter		10 bits x 1 circuits, standard 8 input, max 26 input
	D-A converter		8 bits x 2 circuits
	DMAC		4 channels
	DMAC II		Start by all variable vector interrupt factors Immediate transfer, operation and chain transfer function
	CRC calculation circuit		CCITT-CRC
	X-Y converter		16 bits X 16 bits
	Watchdog timer		15 bits x 1 (with prescaler)
	Interrupt		41 internal and 8 external sources, 4 software sources, 7 interrupt priority levels
	Clock generating circuit		4 built-in clock generation circuits • Main clock • Subclock • PLL synthsizer • Ring oscillator clock
Electric characteristics	Supply voltage		3.0 to 5.5V (f(XIN)=30MHz without software wait)
	Power consumption		38mA (f(XIN)=30MHz without software wait,Vcc=5V)
	I/O characteristics	I/O withstand voltage	5V
		I/O current	5mA
Operating ambient temperature			–40 to 85°C, –20 to 85°C
Device configuration			CMOS high performance silicon gate
Package			100-pin plastic mold QFP

Note 1 :IE Bus is a trademark of NEC corporation.

Note 2 :I2C Bus is a registered trademark of Philips.

Group Expansion and Product type

Mitsubishi plans to release the following product options as the M32C/80 group:

(1) ROM type : External ROM version and External ROM version with Boot loader
(2) ROM/RAM variation : Figure 1.1.1
(3) Package type
100P6S-A : 0.65mm Pin Pitch Plastic molded QFP
100P6Q-A : 0.5mm Pin Pitch Plastic molded QFP

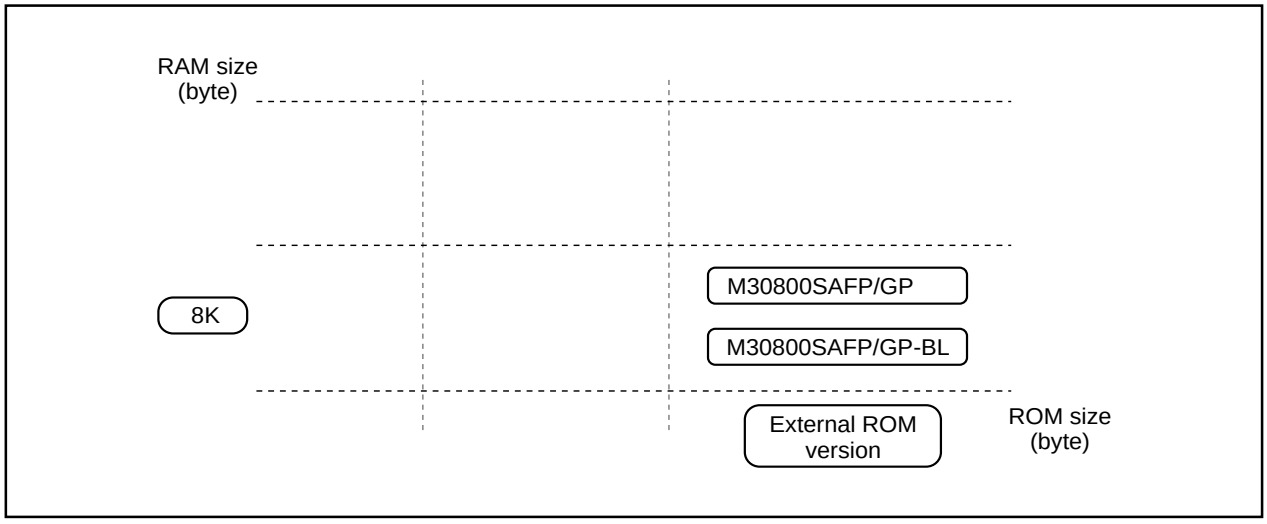

Figure 1.1.1. ROM expansion

The M32C/80 group products are listed in Table 1.1.2.

Table 1.1.2. M32C/80 group **As of September 2002**

Type No		ROM capacity	RAM capacity	Package type	Remarks
M30800SAFP	**	-	8K	100P6S-A	External ROM version
M30800SAGP	**			100P6Q-A	
M30800SAFP-BL	***			100P6S-A	External ROM version with Boot Loader
M30800SAGP-BL	***			100P6Q-A	

** :Under development
*** :Under planning

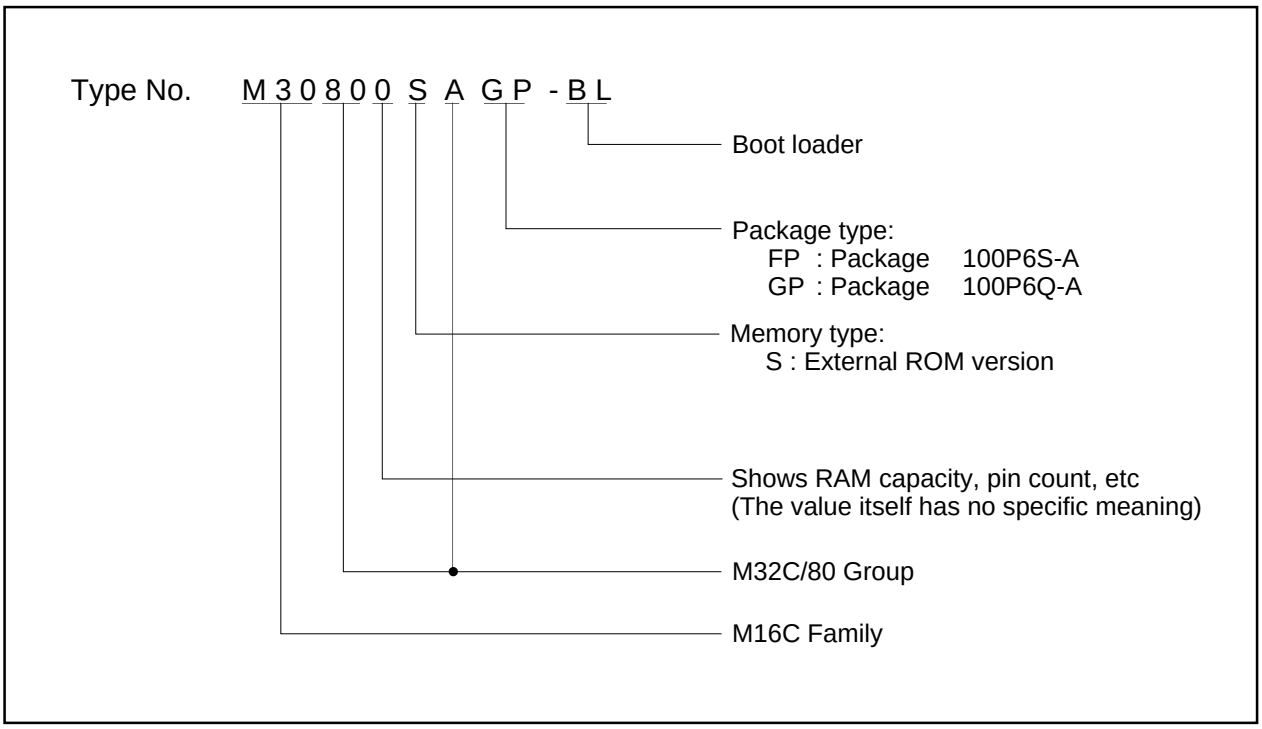

Figure 1.1.2. Part numbering configuration :series/group, ROM/RAM, package, etc.

Pin Configuration and Pin Description

Figure 1.1.3 to 1.1.4 show the pin configurations (top view), table 1.1.3 list pin names.

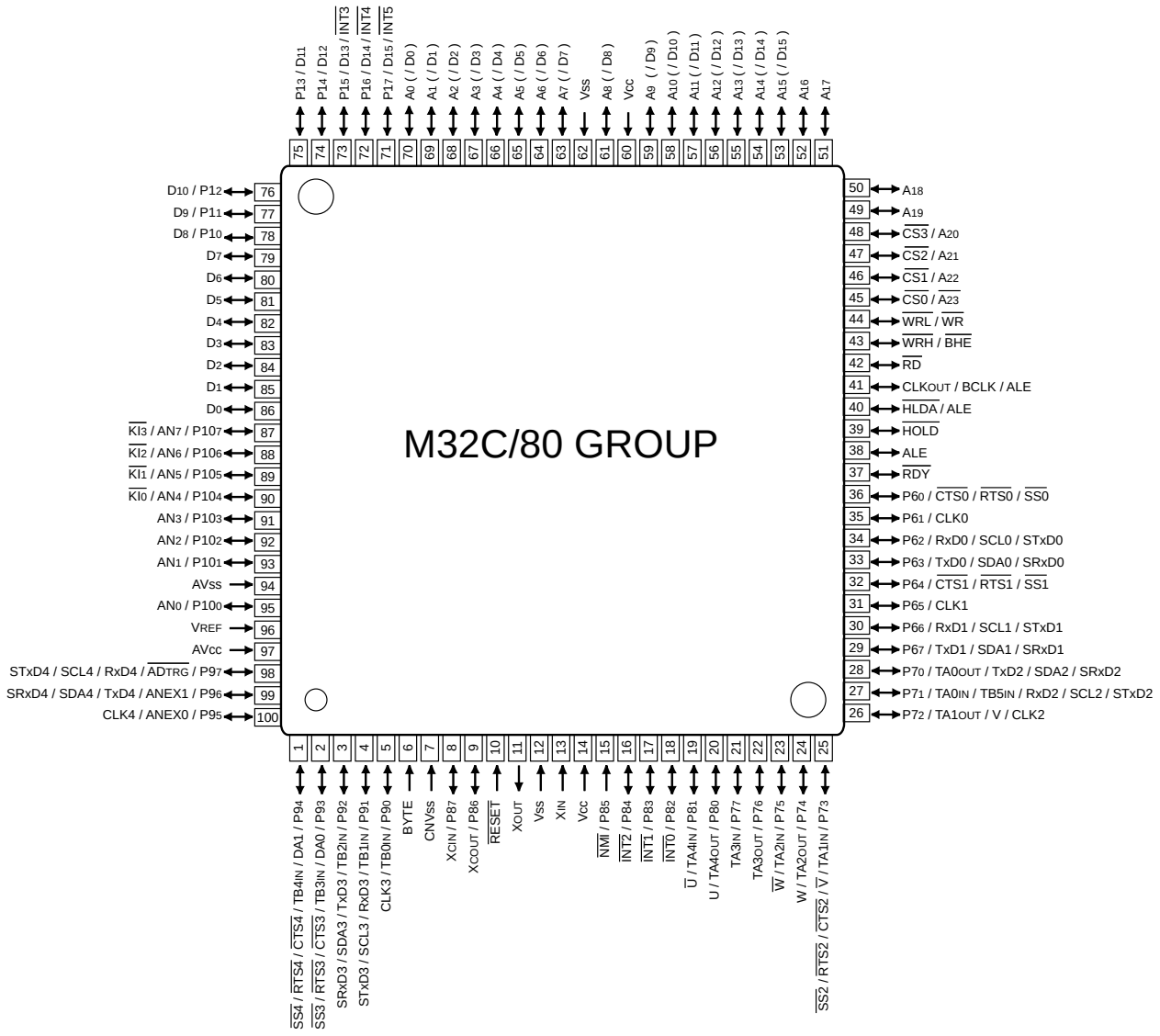

P70 and P71 are N-channel open drain output.

Package: 100P6Q-A

Figure 1.1.3. 100-pin version pin configuration (top view)

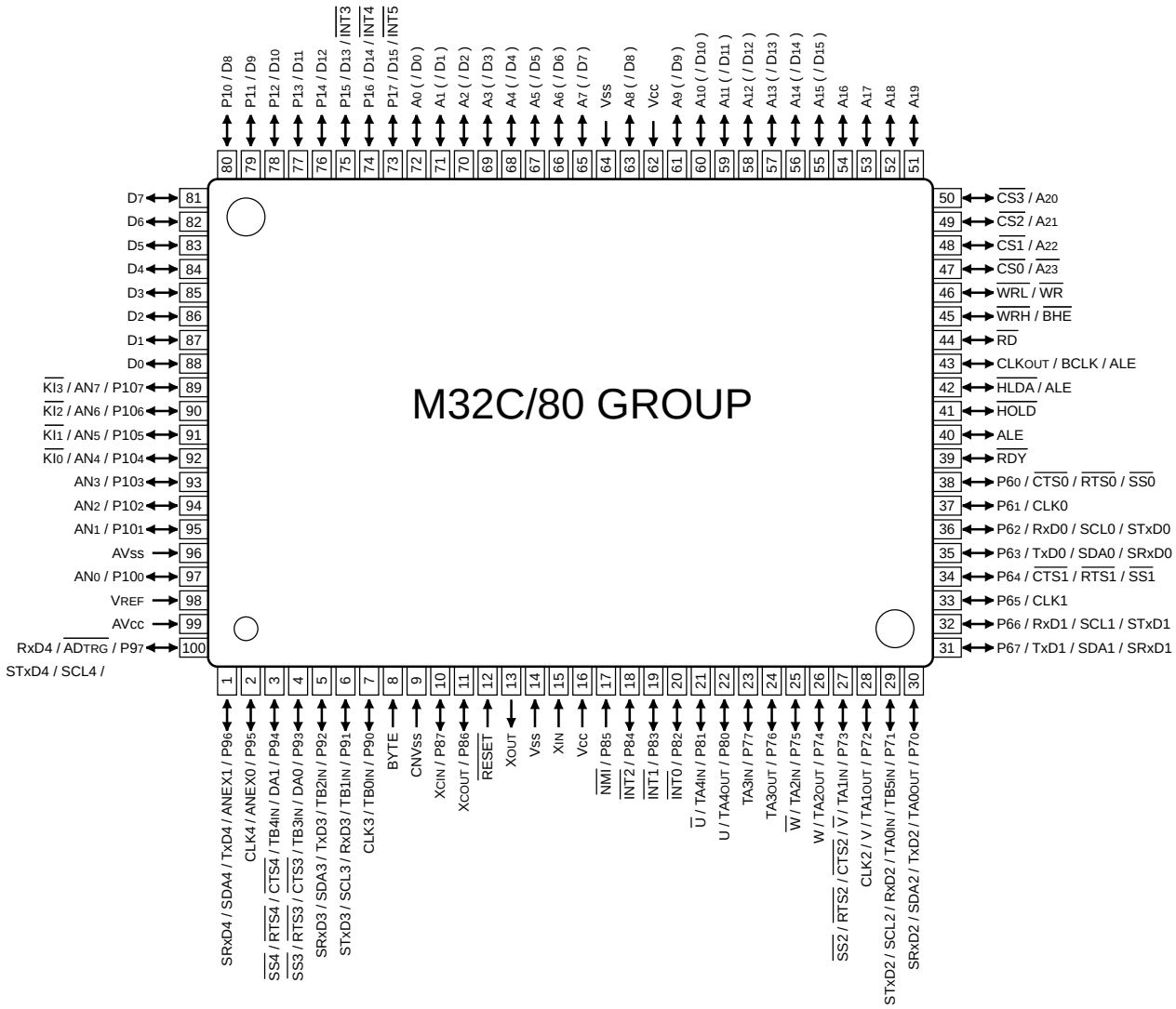

P70 and P71 are N-channel open drain output.

Package: 100P6S-A

Figure 1.1.4. 100-pin version pin configuration (top view)

Table 1.1.3. 100-pin version pin description (1/2)

Package Pin No		Control	Port	Interrupt	Timer	UART	Analog	Bus control
FP	GP							
1	99		$P9_6$			TxD4/SDA4/SRxD4	ANEX1	
2	100		$P9_5$			CLK4	ANEX0	
3	1		$P9_4$		$TB4_{IN}$	$\overline{CTS4}/\overline{RTS4}/\overline{SS4}$	DA1	
4	2		$P9_3$		$TB3_{IN}$	$\overline{CTS3}/\overline{RTS3}/\overline{SS3}$	DA0	
5	3		$P9_2$		$TB2_{IN}$	TxD3/SDA3/SRxD3		
6	4		$P9_1$		$TB1_{IN}$	RxD3/SCL3/STxD3		
7	5		$P9_0$		$TB0_{IN}$	CLK3		
8	6	BYTE						
9	7	CNV_{SS}						
10	8	X_{CIN}/V_{CONT}	$P8_7$					
11	9	X_{COUT}	$P8_6$					
12	10	$\overline{RESET}$						
13	11	X_{OUT}						
14	12	V_{SS}						
15	13	X_{IN}						
16	14	V_{CC}						
17	15		$P8_5$	$\overline{NMI}$				
18	16		$P8_4$	$\overline{INT2}$				
19	17		$P8_3$	$\overline{INT1}$				
20	18		$P8_2$	$\overline{INT0}$				
21	19		$P8_1$		$TA4_{IN}/\overline{U}$			
22	20		$P8_0$		$TA4_{OUT}/U$			
23	21		$P7_7$		$TA3_{IN}$			
24	22		$P7_6$		$TA3_{OUT}$			
25	23		$P7_5$		$TA2_{IN}/\overline{W}$			
26	24		$P7_4$		$TA2_{OUT}/W$			
27	25		$P7_3$		$TA1_{IN}/\overline{V}$	$\overline{CTS2}/\overline{RTS2}/\overline{SS2}$		
28	26		$P7_2$		$TA1_{OUT}/V$	CLK2		
29	27		$P7_1$		$TB5_{IN}/TA0_{IN}$	RxD2/SCL2/STxD2		
30	28		$P7_0$		$TA0_{OUT}$	TxD2/SDA2/SRxD2		
31	29		$P6_7$			TxD1/SDA1/SRxD1		
32	30		$P6_6$			RxD1/SCL1/STxD1		
33	31		$P6_5$			CLK1		
34	32		$P6_4$			$\overline{CTS1}/\overline{RTS1}/\overline{SS1}$		
35	33		$P6_3$			TxD0/SDA0/SRxD0		
36	34		$P6_2$			RxD0/SCL0/STxD0		
37	35		$P6_1$			CLK0		
38	36		$P6_0$			$\overline{CTS0}/\overline{RTS0}/\overline{SS0}$		
39	37							$\overline{RDY}$
40	38							ALE
41	39							$\overline{HOLD}$
42	40							$\overline{HLDA}$/ALE
43	41							CLK_{OUT}/BCLK/ALE
44	42							$\overline{RD}$
45	43							$\overline{WRH}/\overline{BHE}$
46	44							$\overline{WRL}/\overline{WR}$
47	45							$\overline{CS0}/A_{23}$
48	46							$\overline{CS1}/A_{22}$
49	47							$\overline{CS2}/A_{21}$
50	48							$\overline{CS3}/A_{20}$

$P7_0$ and $P7_1$ are N-channel open drain output.

Table 1.1.3. 100-pin version pin description (2/2)

Package pin No		Control	Port	Interrupt	Timer	UART	Analog	Bus control
FP	GP							
51	49							A_{19}
52	50							A_{18}
53	51							A_{17}
54	52							A_{16}
55	53							A_{15}(/D_{15})
56	54							A_{14}(/D_{14})
57	55							A_{13}(/D_{13})
58	56							A_{12}(/D_{12})
59	57							A_{11}(/D_{11})
60	58							A_{10}(/D_{10})
61	59							A_9(/D_9)
62	60	V_{CC}						
63	61							A_8(/D_8)
64	62	V_{SS}						
65	63							A_7(/D_7)
66	64							A_6(/D_6)
67	65							A_5(/D_5)
68	66							A_4(/D_4)
69	67							A_3(/D_3)
70	68							A_2(/D_2)
71	69							A_1(/D_1)
72	70							A_0(/D_0)
73	71		$P1_7$	$\overline{INT5}$				D_{15}
74	72		$P1_6$	$\overline{INT4}$				D_{14}
75	73		$P1_5$	$\overline{INT3}$				D_{13}
76	74		$P1_4$					D_{12}
77	75		$P1_3$					D_{11}
78	76		$P1_2$					D_{10}
79	77		$P1_1$					D_9
80	78		$P1_0$					D_8
81	79							D_7
82	80							D_6
83	81							D_5
84	82							D_4
85	83							D_3
86	84							D_2
87	85							D_1
88	86							D_0
89	87		$P10_7$	$\overline{KI_3}$			AN_7	
90	88		$P10_6$	$\overline{KI_2}$			AN_6	
91	89		$P10_5$	$\overline{KI_1}$			AN_5	
92	90		$P10_4$	$\overline{KI_0}$			AN_4	
93	91		$P10_3$				AN_3	
94	92		$P10_2$				AN_2	
95	93		$P10_1$				AN_1	
96	94	AV_{SS}						
97	95		$P10_0$				AN_0	
98	96	V_{REF}						
99	97	AV_{CC}						
100	98		$P9_7$			RxD4/SCL4/STxD4	$\overline{ADTRG}$	

Outline Figure

100P6Q-A (MMP)

Plastic 100pin 14×14mm body LQFP

EIAJ Package Code	JEDEC Code	Weight(g)	Lead Material
LQFP100-P-1414-0.50	–	0.63	Cu Alloy

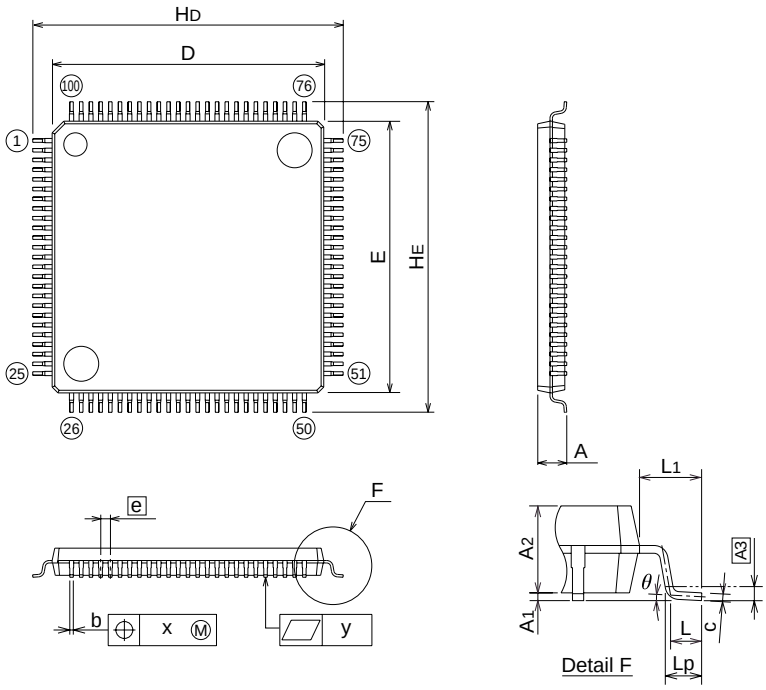

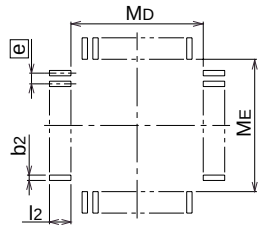

Recommended Mount Pad

Symbol	Dimension in Millimeters		
	Min	Nom	Max
A	–	–	1.7
A1	0	0.1	0.2
A2	–	1.4	–
b	0.13	0.18	0.28
c	0.105	0.125	0.175
D	13.9	14.0	14.1
E	13.9	14.0	14.1
e	–	0.5	–
HD	15.8	16.0	16.2
HE	15.8	16.0	16.2
L	0.3	0.5	0.7
L1	–	1.0	–
Lp	0.45	0.6	0.75
A3	–	0.25	–
x	–	–	0.08
y	–	–	0.1
θ	0°	–	10°
b2	–	0.225	–
l2	0.9	–	–
MD	–	14.4	–
ME	–	14.4	–

100P6S-A (MMP)

Plastic 100pin 14×20mm body QFP

EIAJ Package Code	JEDEC Code	Weight(g)	Lead Material
QFP100-P-1420-0.65	–	1.58	Alloy 42

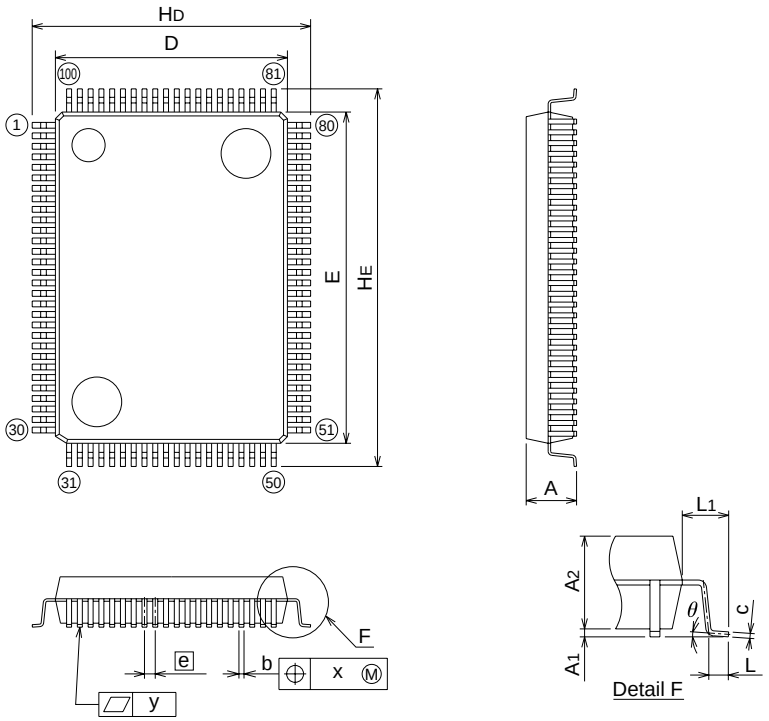

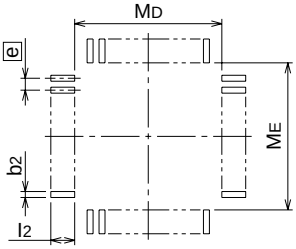

Recommended Mount Pad

Symbol	Dimension in Millimeters		
	Min	Nom	Max
A	–	–	3.05
A1	0	0.1	0.2
A2	–	2.8	–
b	0.25	0.3	0.4
c	0.13	0.15	0.2
D	13.8	14.0	14.2
E	19.8	20.0	20.2
e	–	0.65	–
HD	16.5	16.8	17.1
HE	22.5	22.8	23.1
L	0.4	0.6	0.8
L1	–	1.4	–
x	–	–	0.13
y	–	–	0.1
θ	0°	–	10°
b2	–	0.35	–
l2	1.3	–	–
MD	–	14.6	–
ME	–	20.6	–

Revision History

Rev.0.10 -- September 13, 2002	New document
Rev.0.11 -- September 19, 2002	•Page 3 Table 1.1.1 "CAN" deleted.
Rev.0.12 -- November 20, 2002	•Page 2 "About M32C/80 Group" changed. •Page 3 Table 1.1.1 "4.2 to 5.5V" --> "3.0 to 5.5V" "3.0 to 3.6V (f(XIN)=20MHz without software wait)." deleted. "26mA (f(XIN)=20MHz without software wait,Vcc=3.3V)" deleted.