SGS-THOMSON MICROELECTRONICS

SD1134

RF & MICROWAVE TRANSISTORS UHF MOBILE APPLICATIONS

- 450 - 512 MHz
- 12.5 VOLTS
- EFFICIENCY 55%
- COMMON EMITTER
- P_{OUT} = 2.0 W MIN. WITH 10.0 dB GAIN

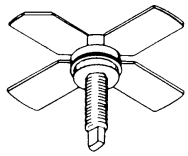

.280 4L STUD (M122)
epoxy sealed

ORDER CODE	BRANDING
SD1134	SD1134

PIN CONNECTION

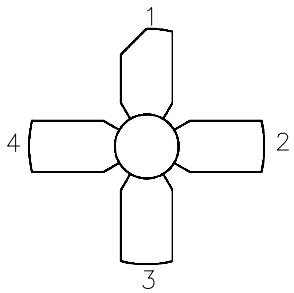

1. Collector
2. Emitter
3. Base
4. Emitter

DESCRIPTION

The SD1134 is a 12.5 V Class C epitaxial silicon NPN planar transistor designed primarily for UHF communications. This device utilizes improved metallization to achieve infinite VSWR at rated operating conditions.

ABSOLUTE MAXIMUM RATINGS (T_{case} = 25°C)

Symbol	Parameter	Value	Unit
V_{CBO}	Collector-Base Voltage	36	V
V_{CEO}	Collector-Emitter Voltage	16	V
V_{CES}	Collector-Emitter Voltage	36	V
V_{EBO}	Emitter-Base Voltage	4.0	V
I_C	Device Current	0.75	A
P_{DISS}	Power Dissipation	5	W
T_J	Junction Temperature	+200	°C
T_{STG}	Storage Temperature	– 65 to +150	°C

THERMAL DATA

$R_{TH(j-c)}$	Junction-Case Thermal Resistance	35	°C/W

ELECTRICAL SPECIFICATIONS (T_{case} = 25°C)

STATIC

Symbol	Test Conditions		Value			Unit
			Min.	Typ.	Max.	
BV_{CES}	I_C = 5mA	V_{BE} = 0V	36	—	—	V
BV_{CEO}	I_C = 25mA	I_B = 0mA	16	—	—	V
BV_{EBO}	I_E = 1mA	I_C = 0mA	4.0	—	—	V
I_{CBO}	V_{CB} = 15V	I_E = 0mA	—	—	1	mA
h_{FE}	V_{CE} = 5V	I_C = 100mA	20	—	—	—

DYNAMIC

Symbol	Test Conditions			Value			Unit
				Min.	Typ.	Max.	
P_{OUT}	f = 470 MHz	P_{IN} = 0.20 W	V_{CC} = 12.5 V	2.0	—	—	W
G_P	f = 470 MHz	P_{IN} = 0.20 W	V_{CC} = 12.5 V	10.0	—	—	dB
C_{OB}	f = 1 MHz	V_{CB} = 12 V		—	6	—	pF

TYPICAL PERFORMANCE

POWER OUTPUT & COLLECTOR EFFICIENCY vs POWER INPUT

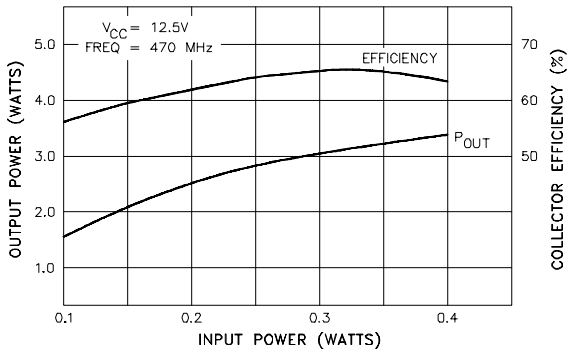

POWER OUTPUT vs FREQUENCY

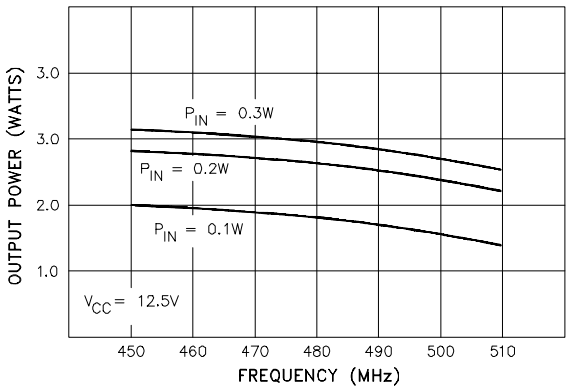

CAPACITANCE vs VOLTAGE

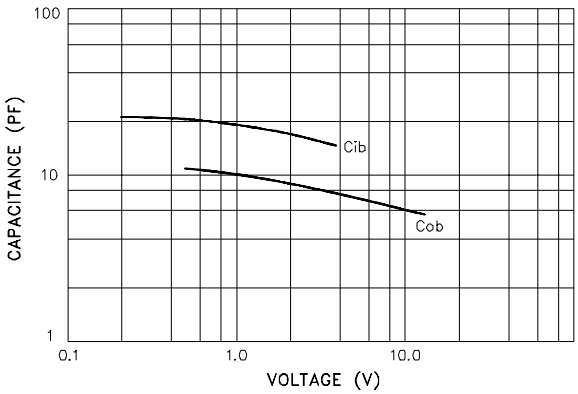

IMPEDANCE DATA

TYPICAL INPUT IMPEDANCE

Z_{IN}

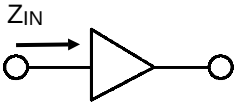

TYPICAL COLLECTOR LOAD IMPEDANCE

Z_{CL}

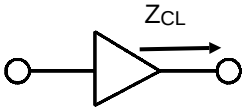

FREQ.	Z_{IN} (Ω)	Z_{CL} (Ω)
450 MHz	2.7 + j 0.9	11.5 – j 15.0
470 MHz	2.6 + j 1.3	12.2 – j 13.5
512 MHz	2.2 + j 1.7	12.7 – j 13.0

TEST CIRCUIT

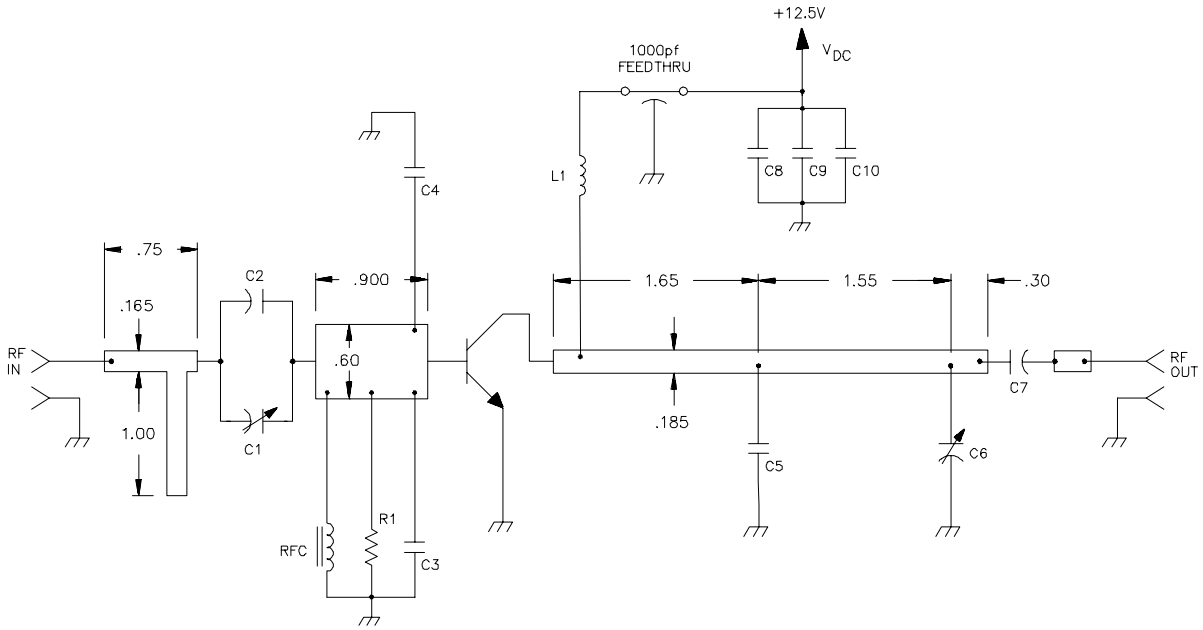

C1 : 0.8-10pF, Voltronics AJ10
C2, : ATC 100-B, 7.5pF, Chip Capacitor
C3, C4 : ATC 100-B, 24pF, Chip Capacitor
C5 : ATC 100-B, 5.6pF, Chip Capacitor
C6 : 0.6-6pF, Johanson
C7 : ATC 100-B, 200pF, Chip Capacitor
C8 : 5.6µF Electrolytic
C9 : 0.1µF, Disc-Ceramic
C10 : 0.01µF, Disc-Ceramic
L1 : 2 Turns #22 Enameled 0.1" I.D.
R1 : 360Ω, 1/4" Wide
RFC : 2 Turns in Ferroxcube VK 200/19-4B

Board Material: 3M-K-6098 1/16" Thick

PACKAGE MECHANICAL DATA

Ref.: Dwg. No.12-0122

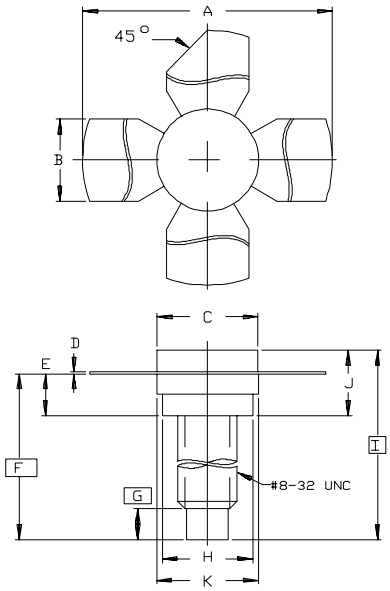

SGS-THOMSON MICROELECTRONICS		
	MINIMUM Inches/mm	MAXIMUM Inches/mm
A	1.010/25,65	1.055/26,80
B	.220/5,59	.230/5,84
C	.270/6,86	.285/7,24
D	.003/0,08	.007/0,18
E	.117/2,97	.137/3,48
F	.572/14,53	
G	.130/3,30	
H	.245/6,22	.255/6,48
I	.640/16,26	
J	.175/4,45	.217/5,51
K	.275/6,99	.285/7,24

SGS-THOMSON Microelectronics GROUP OF COMPANIES
Australia - Brazil - France - Germany - Hong Kong - Italy - Japan - Korea - Malaysia - Malta - Morocco - The Netherlands - Singapore - Spain - Sweden - Switzerland - Taiwan - Thailand - United Kingdom - U.S.A