PD60030
PD60030S

RF POWER TRANSISTORS
The LdmoST Plastic FAMILY

TARGET DATA

Designed for GSM / EDGE / IS-97 applications

- EXCELLENT THERMAL STABILITY
- COMMON SOURCE CONFIGURATION
- P_{OUT} = 30 W with 10 dB gain @ 2000 MHz

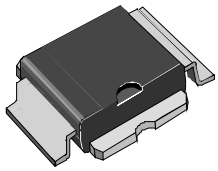

PowerSO-10RF
(formed lead)

ORDER CODE	**BRANDING**
PD60030	PD60030

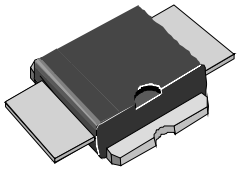

PowerSO-10RF
(straight lead)

ORDER CODE	**BRANDING**
PD60030S	PD60030S

DESCRIPTION

The PD60030 is a common source N-Channel, enhancement-mode lateral Field-Effect RF power transistor. It is designed for high gain, broad band commercial and industrial applications. It operates at 26 V in common source mode at frequencies of up to 2 GHz. PD60030 boasts the excellent gain, linearity and reliability of ST's latest LDMOS technology mounted in the first true SMD plastic RF power package, PowerSO-10RF. PD60030's superior linearity performance makes it an ideal solution for base station applications.

The PowerSO-10 plastic package, designed to offer high reliability, is the first ST JEDEC approved, high power SMD package. It has been specially optimized for RF needs and offers excellent RF performances and ease of assembly.

Mounting recommendations are available in ***www.st.com/rf/*** *(look for application note AN1294)*

ABSOLUTE MAXIMUM RATINGS (T_{CASE} = 25 °C)

Symbol	Parameter	Value	Unit
$V_{(BR)DSS}$	Drain-Source Voltage	65	V
V_{GS}	Gate-Source Voltage	± 20	V
I_D	Drain Current	TBD	A
P_{DISS}	Power Dissipation (@ Tc = 70 °C)	TBD	W
Tj	Max. Operating Junction Temperature	165	°C
T_{STG}	Storage Temperature	-65 to +175	°C

THERMAL DATA (T_{CASE} = 70 °C)

$R_{th(j-c)}$	Junction -Case Thermal Resistance	TBD	°C/W

ELECTRICAL SPECIFICATION (T_{CASE} = 25 °C)

STATIC

Symbol	Test Conditions			Min.	Typ.	Max.	Unit
$V_{(BR)DSS}$	V_{GS} = 0 V	I_{DS} = 1 mA		65			V
I_{DSS}	V_{GS} = 0 V	V_{DS} = 28 V				1	µA
I_{GSS}	V_{GS} = 20 V	V_{DS} = 0 V				1	µA
$V_{GS(Q)}$	V_{DS} = 28 V	I_D = 300 mA		2.5		5.0	V
$V_{DS(ON)}$	V_{GS} = 10 V	I_D = 3 A			TBD		V
G_{FS}	V_{DS} = 10 V	I_D = 3 A		2.0	TBD		mho
C_{ISS}	V_{GS} = 0 V	V_{DS} = 28 V	f = 1 MHz		TBD		pF
C_{OSS}	V_{GS} = 0 V	V_{DS} = 28 V	f = 1 MHz		TBD		pF
C_{RSS}	V_{GS} = 0 V	V_{DS} = 28 V	f = 1 MHz		TBD		pF

DYNAMIC

Symbol	Test Conditions				Min.	Typ.	Max.	Unit
P_{out}	V_{DD} = 26 V	I_{DQ} = 300 mA		f = 2000 MHz	30			W
IMD3	V_{DD} = 26 V	I_{DQ} = 300 mA	P_{OUT} = 30 W PEP			-32	-28	dBc
G_{PS}	V_{DD} = 26 V	I_{DQ} = 300 mA	P_{OUT} = 30 W PEP		10	11		dB
η_D	V_{DD} = 26 V	I_{DQ} = 300 mA	P_{OUT} = 30 W PEP			35		%
Load mismatch	V_{DD} = 26 V ALL PHASE ANGLES	I_{DQ} = 300 mA	P_{OUT} = 30 W	f = 2000 MHz	10:1			VSWR

note: f_1 = 2000 MHz
PEP f_2 = 2000.1 MHz

IMPEDANCE DATA

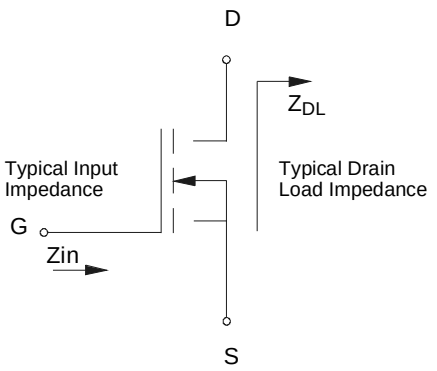

FREQ. MHz	Z_{IN} (Ω)	Z_{DL}(Ω)
1800		
1850		
1900		
1950		
2000		

PowerSO-10RF Straight Lead MECHANICAL DATA

DIM.	mm			Inch		
	MIN.	TYP.	MAX	MIN.	TYP.	MAX
A1	1.62	1.67	1.72	0.064	0.065	0.068
A2	3.4	3.5	3.6	0.134	0.137	0.142
A3	1.2	1.3	1.4	0.046	0.05	0.054
A4	0.15	0.2	0.25	0.005	0.007	0.009
a		0.2			0.007	
b	5.4	5.53	5.65	0.212	0.217	0.221
c	0.23	0.27	0.32	0.008	0.01	0.012
D	9.4	9.5	9.6	0.370	0.374	0.377
D1	7.4	7.5	7.6	0.290	0.295	0.298
E	15.15	15.4	15.65	0.595	0.606	0.615
E1	9.3	9.4	9.5	0.365	0.37	0.375
E2	7.3	7.4	7.5	0.286	0.292	0.294
E3	5.9	6.1	6.3	0.231	0.24	0.247
F		0.5			0.019	
G		1.2			0.047	
R1			0.25			0.01
R2		0.8			0.031	
T1		6 deg			6 deg	
T2		10 deg			10 deg	

Note (1): Resin protrusions not included (max value: 0.15 mm per side)

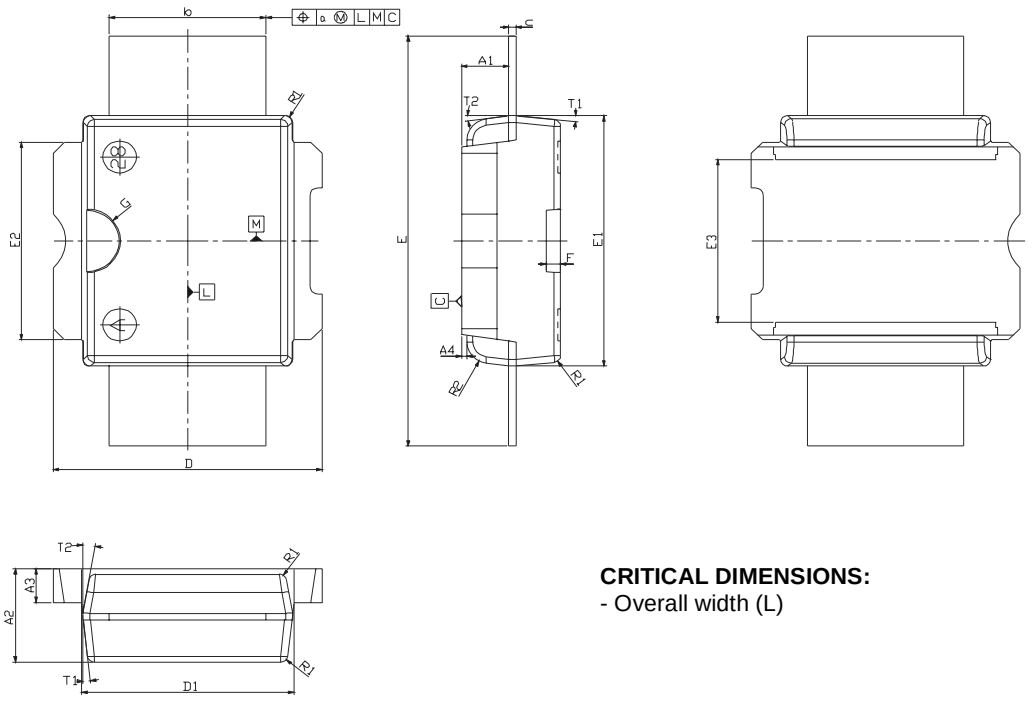

CRITICAL DIMENSIONS:
- Overall width (L)

PowerSO-10RF Formed Lead (Gull Wing) MECHANICAL DATA

DIM.	mm			Inch		
	MIN.	TYP.	MAX	MIN.	TYP.	MAX
A1	0	0.05	0.1	0.	0.0019	0.0038
A2	3.4	3.5	3.6	0.134	0.137	0.142
A3	1.2	1.3	1.4	0.046	0.05	0.054
A4	0.15	0.2	0.25	0.005	0.007	0.009
a		0.2			0.007	
b	5.4	5.53	5.65	0.212	0.217	0.221
c	0.23	0.27	0.32	0.008	0.01	0.012
D	9.4	9.5	9.6	0.370	0.374	0.377
D1	7.4	7.5	7.6	0.290	0.295	0.298
E	13.85	14.1	14.35	0.544	0.555	0.565
E1	9.3	9.4	9.5	0.365	0.37	0.375
E2	7.3	7.4	7.5	0.286	0.292	0.294
E3	5.9	6.1	6.3	0.231	0.24	0.247
F		0.5			0.019	
G		1.2			0.047	
L	0.8	1	1.1	0.030	0.039	0.042
R1			0.25			0.01
R2		0.8			0.031	
T	2 deg	5 deg	8 deg	2 deg	5 deg	8 deg
T1		6 deg			6 deg	
T2		10 deg			10 deg	

Note (1): Resin protrusions not included (max value: 0.15 mm per side)