SGS-THOMSON MICROELECTRONICS

AM83135-010

RF & MICROWAVE TRANSISTORS S-BAND RADAR APPLICATIONS

- REFRACTORY/GOLD METALLIZATION
- EMITTER SITE BALLASTED
- LOW THERMAL RESISTANCE
- INPUT/OUTPUT MATCHING
- OVERLAY GEOMETRY
- METAL/CERAMIC HERMETIC PACKAGE
- P_{OUT} = 10 W MIN. WITH 5.0 dB GAIN

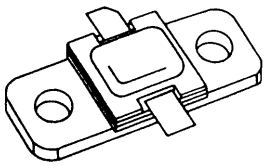

.310 x .310 2LFL (S064)
hermetically sealed

ORDER CODE	BRANDING
AM83135-010	83135-10

DESCRIPTION

The AM83135-010 device is a high power silicon bipolar NPN transistor specifically designed for S-Band radar pulsed output and driver applications.

This device is characterized at 100µsec pulse width and 10% duty cycle, but is capable of operation over a range of pulse widths, duty cycles, and temperatures, and can withstand a 3:1 output VSWR with a + 1 dB input overdrive. Low RF thermal resistance, refractory/gold metallization, and computerized automatic wire bonding techniques ensure high reliability and product consistency (including phase characteristics).

The AM83135-010 is supplied in the IMPAC™ hermetic metal/ceramic package with internal input/output impedance matching circuitry, and is intended for military and other high reliability applications.

PIN CONNECTION

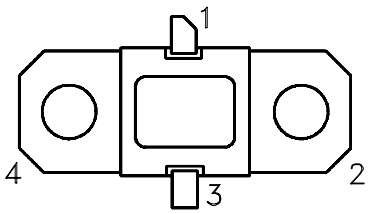

1. Collector
2. Base
3. Emitter
4. Base

ABSOLUTE MAXIMUM RATINGS (T_{case} = 25°C)

Symbol	Parameter	Value	Unit
P_{DISS}	Power Dissipation* ($T_C \leq 50°C$)	50	W
I_C	Device Current*	2	A
V_{CC}	Collector-Supply Voltage*	46	V
T_J	Junction Temperature (Pulsed RF Operation)	250	°C
T_{STG}	Storage Temperature	– 65 to +200	°C

THERMAL DATA

$R_{TH(j-c)}$	Junction-Case Thermal Resistance*	4.0	°C/W

*Applies only to rated RF amplifier operation

ELECTRICAL SPECIFICATIONS (T_{case} = 25°C)

STATIC

Symbol	Test Conditions		Value			Unit
			Min.	Typ.	Max.	
BV_{CBO}	I_C = 7 mA	I_E = 0 mA	55	—	—	V
BV_{EBO}	I_E = 1 mA	I_C = 0 mA	3.5	—	—	V
BV_{CER}	I_C = 7 mA	R_{BE} = 10 Ω	55	—	—	V
I_{CES}	V_{BE} = 0 V	V_{CE} = 40 V	—	—	5	mA
h_{FE}	V_{CE} = 5 V	I_C = 600 mA	30	—	—	—

DYNAMIC

Symbol	Test Conditions			Value			Unit
				Min.	Typ.	Max.	
P_{OUT}	f = 3.1 – 3.5 GHz	P_{IN} = 3.2 W	V_{CC} = 40 V	10	—	—	W
ηc	f = 3.1 – 3.5 GHz	P_{OUT} = 10 W	V_{CC} = 40 V	30	—	—	%
P_G	f = 3.1 – 3.5 GHz	P_{OUT} = 10 W	V_{CC} = 40 V	5.0	—	—	dB

Note: Pulse Width = 100µSec
Duty Cycle = 10%

TYPICAL PERFORMANCE

POWER OUTPUT & COLLECTOR EFFICIENCY vs FREQUENCY

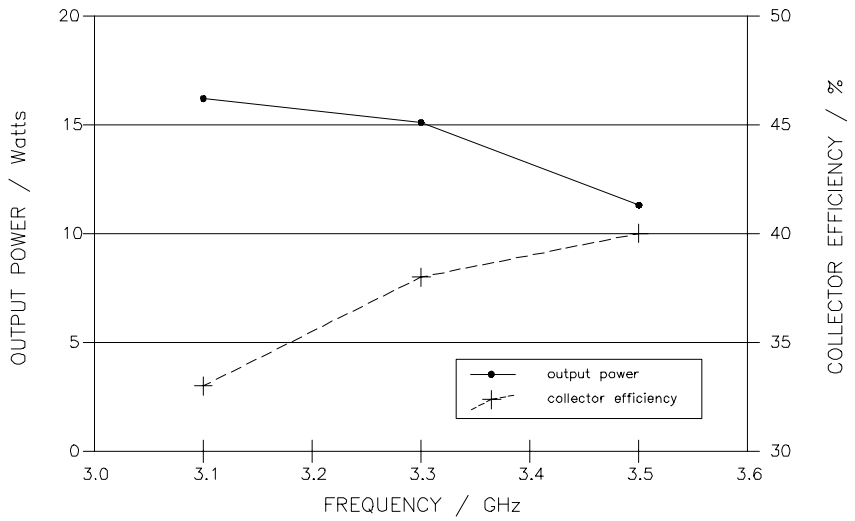

IMPEDANCE DATA

TYPICAL INPUT IMPEDANCE

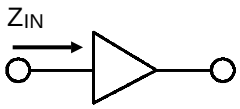

TYPICAL COLLECTOR LOAD IMPEDANCE

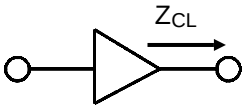

FREQ.	Z_{IN} (Ω)	Z_{CL} (Ω)
L = 3.1 GHz	12.1 – j 1.6	12.7 + 16.0
M = 3.3 GHz	10.0 + j 1.9	14.3 + j 9.5
H = 3.5 GHz	5.5 + j 1.7	6.8 + j 7.7

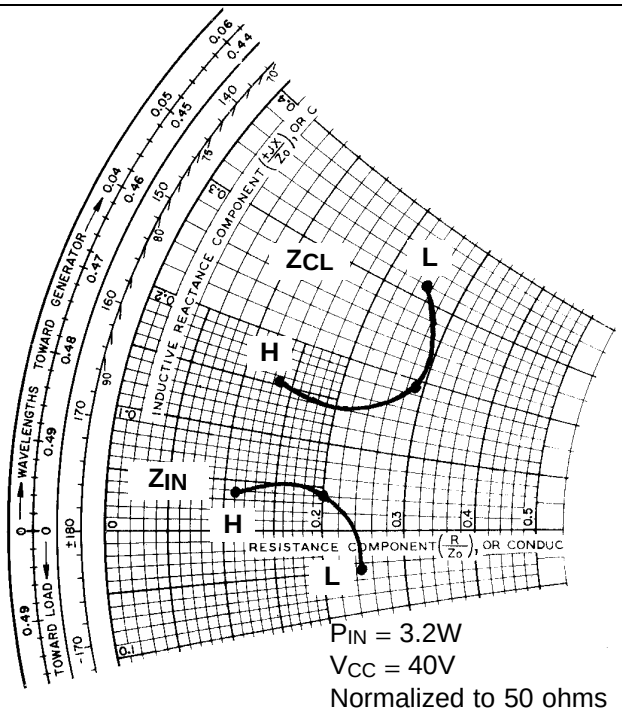

P_{IN} = 3.2W
V_{CC} = 40V
Normalized to 50 ohms

TEST CIRCUIT

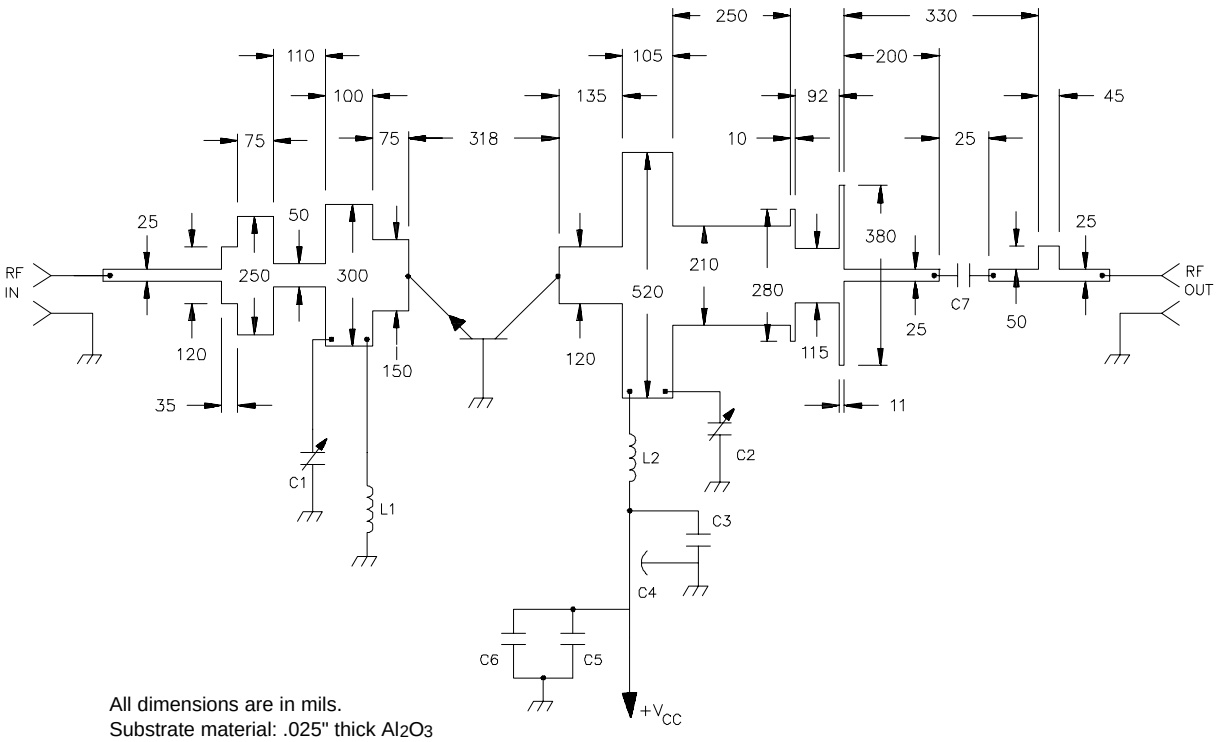

All dimensions are in mils.
Substrate material: .025" thick Al_2O_3

C1,C2 : 33 pF 50V Chip Capacitor
C3 : 1 µf 50V Electrolytic Capacitor
C4 : 1000 pF 200V Feedthru Capacitor
C5 : 0.1 µF 50V Disc Ceramic Capacitor
C6 : 100 µf 63V Electrolytic Capacitor
C7 : 33 pF 50V Chip Capacitor
L1,L2 : RF Choke, 2 Turns #26 Tinned Wire, .080" I.D.

PACKAGE MECHANICAL DATA

Ref.: Dwg. No. 12-0221 rev. A

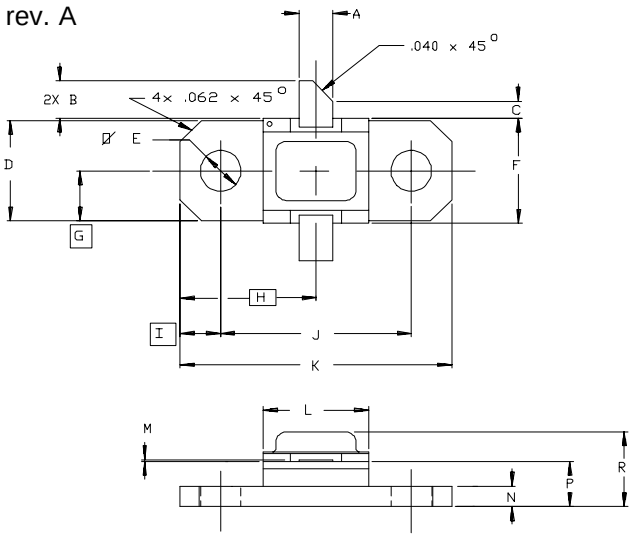

SGS-THOMSON MICROELECTRONICS			CONT'D		
	MINIMUM Inches/mm	MAXIMUM Inches/mm		MINIMUM Inches/mm	MAXIMUM Inches/mm
A	.095/2,41	.105/2,67	K	.790/20,07	.810/20,57
B	.100/2,54	.120/3,05	L	.300/7,62	.320/8,13
C	.050/1,27		M	.003/0,08	.006/0,15
D	.286/7,26	.306/7,77	N	.052/1,32	.072/1,83
E	.110/2,79	.130/3,30	P	.118/3,00	.131/3,33
F	.306/7,77	.318/8,08	R		.230/5,84
G	.148/3,76				
H	.400/10,16				
I	.119/3,02				
J	.552/14,02	.572/14,53			