MCP120/130

Microcontroller Supervisory Circuit with Open Drain Output

FEATURES

- Holds microcontroller in reset until supply voltage reaches stable operating level
- Resets microcontroller during power loss
- Precision monitoring of 3V, 3.3V and 5V systems
- 7 voltage trip points available
- Active low $\overline{\text{RESET}}$ pin
- Open drain output
- Internal pull-up resistor (5 kΩ) for MCP130
- Holds $\overline{\text{RESET}}$ for 350 ms (typical)
- $\overline{\text{RESET}}$ to V_{CC} = 1.0V
- Accuracy of ±125 mV for 5V systems and ±75 mV for 3V systems over temperature
- 45 µA typical operating current
- Temperature range:
  - Industrial (I): -40°C to +85°C

DESCRIPTION

The Microchip Technology Inc. MCP120/130 is a voltage supervisory device designed to keep a microcontroller in reset until the system voltage has reached the proper level and stabilized. It also operates as protection from brown-out conditions when the supply voltage drops below a safe operating level. Both devices are available with a choice of seven different trip voltages and both have open drain outputs. The MCP130 has an internal 5 kΩ pullup resistor. Both devices have active low $\overline{\text{RESET}}$ pins. The MCP120/130 will assert the $\overline{\text{RESET}}$ signal whenever the voltage on the V_{DD} pin is below the trip-point voltage.

PACKAGES

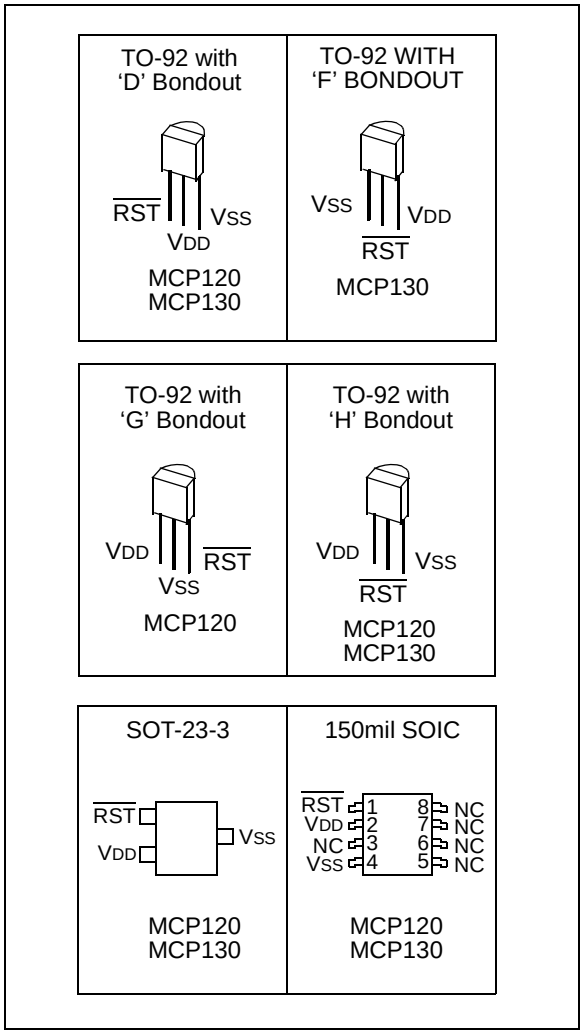

BLOCK DIAGRAM

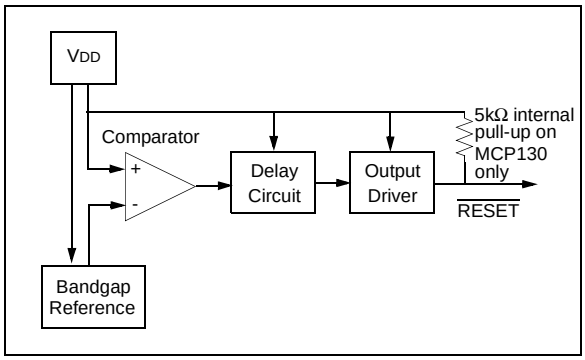

© 2001 Microchip Technology Inc.

1.0 ELECTRICAL CHARACTERISTICS

1.1 Maximum Ratings*

V_{DD} 7.0V
All inputs and outputs w.r.t. V_{SS} ..... -0.6V to V_{DD} +1.0V
Storage temperature ..... -65°C to +150°C
Ambient temp. with power applied ..... -65°C to +125°C
ESD protection on all pins ..... ≥ 2 kV

***Notice:** Stresses above those listed under “Maximum Ratings” may cause permanent damage to the device. This is a stress rating only and functional operation of the device at those or any other conditions above those indicated in the operational listings of this specification is not implied. Exposure to maximum rating conditions for extended periods may affect device reliability.

DC AND AC CHARACTERISTICS

All parameters apply at the specified temp and voltage ranges unless otherwise noted.		V_{DD} = 1.0 - 5.5V Industrial (I): -40°C to +85°C					
Parameter		**Symbol**	**Min.**	**Typ.**	**Max.**	**Units**	**Test Conditions**
Operating Voltage Range		V_{DD}	1.0	—	5.5	V	
V_{DD} Value to $\overline{RESET}$		$V_{DD_{MIN}}$	1.0	—	—	V	
Operating Current		I_{DD}	—	45	60	µA	V_{DD} = 5.5V (no load)
V_{DD} Trip Point	MCP1X0-270 MCP1X0-300 MCP1X0-315 MCP1X0-450 MCP1X0-460 MCP1X0-475 MCP1X0-485	V_{TRIP}	2.55 2.85 3.0 4.25 4.35 4.50 4.60	2.625 2.925 3.075 4.375 4.475 4.625 4.725	2.7 3.0 3.15 4.50 4.60 4.75 4.85	V	
$\overline{RESET}$ Low Level Output Voltage	MCP1X0-270 MCP1X0-300 MCP1X0-315	V_{OL}	—	—	0.4	V	I_{OL} = 3.2 mA, $V_{DD} = V_{TRIP_{MIN}}$
	MCP1X0-450 MCP1X0-460 MCP1X0-475 MCP1X0-485		—	—	0.6		I_{OL} = 8.5 mA, $V_{DD} = V_{TRIP_{MIN}}$
$\overline{RESET}$ High Level Output Voltage (MCP130 Only)	MCP130-xxx (All V_{TRIP} Points)	V_{OH}	V_{DD}-0.7	—	—	V	I_{OH} = 50 µA, $V_{DD} > V_{TRIP_{MAX}}$
Pull-up Resistor (MCP130 Only)			—	5	—	kΩ	
Output Leakage (MCP120 Only)			—	1	—	µA	
Threshold Hysteresis		V_{HYS}	—	50	—	mV	
V_{DD} Detect to $\overline{RESET}$ Inactive		t_{RPU}	150	350	700	ms	
V_{DD} Detect to $\overline{RESET}$		t_{RPD}	—	10	—	µs	V_{DD} ramped from $V_{TRIP_{MAX}}$ + 250 mV down to $V_{TRIP_{MIN}}$ - 250 mV
Note: Typical values are for 25°C and V_{DD} = 5.0V							

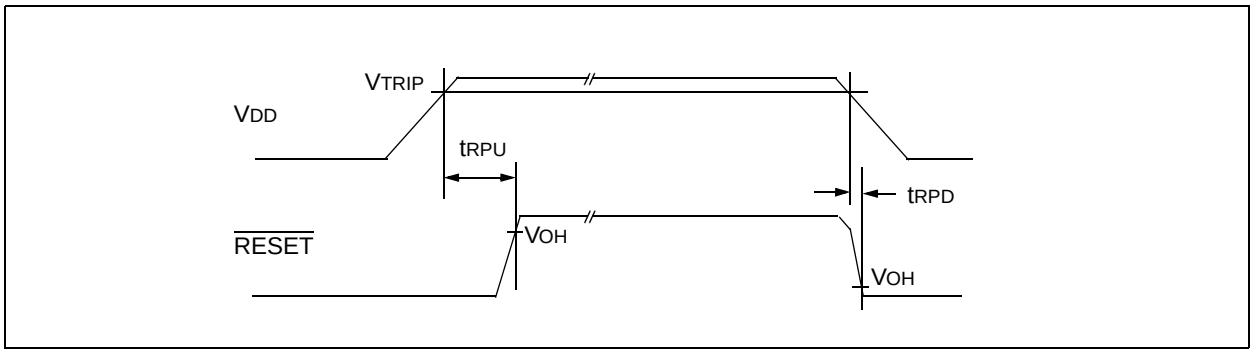

Figure 1-1: *MCP120/130 Timing Diagram*

2.0 APPLICATIONS INFORMATION

2.1 The Need for Supervisory Circuits

For many of today's microcontroller applications, care must be taken to prevent low power conditions that can cause many different system problems. The most common causes are brown-out conditions where the system supply drops below the operating level momentarily, and the second, is when a slowly decaying power supply causes the microcontroller to begin executing instructions without enough voltage to sustain SRAM and producing indeterminate results.

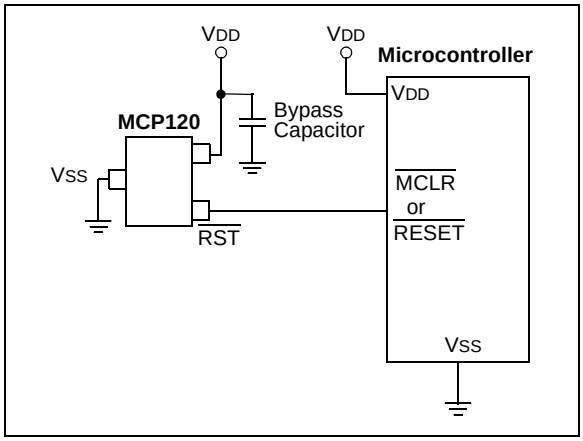

Figure 2-1: *Typical Application*

2.2 Negative Going V_{DD} Transients

Many system designers implementing POR circuits are concerned about the minimum pulse width required to cause a reset. Figure 2-2 shows typical transient voltage below the trip point (V_{TRIP} - V_{DD}) vs. transient duration. It shows that the farther below the trip point the transient pulse goes, the duration of the pulse required to cause a reset gets shorter. A 0.1 µF bypass cap mounted as close as possible to the V_{DD} pin provides additional transient immunity.

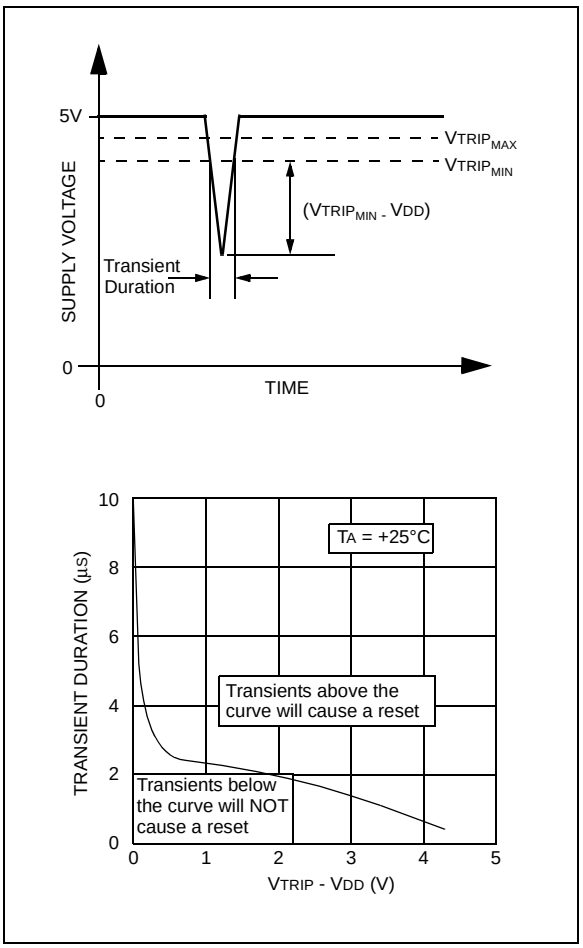

Figure 2-2: *Typical Transient Response*

© 2001 Microchip Technology Inc.

2.3 Effect of Temperature on Timeout Period (t_{RPU})

The timeout period (t_{RPU}) determines how long the device remains in the reset condition. This is controlled by an internal RC timer and is effected by both V_{DD} and temperature. The graph shown in Figure 2-3 shows typical response for different V_{DD} values and temperatures.

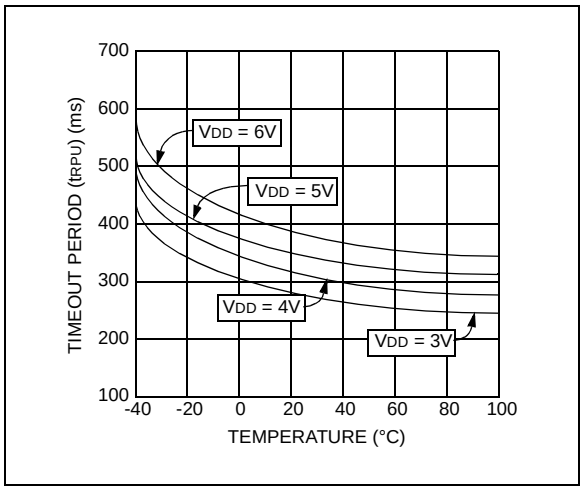

Figure 2-3: *t_{RPU} vs. Temperature*

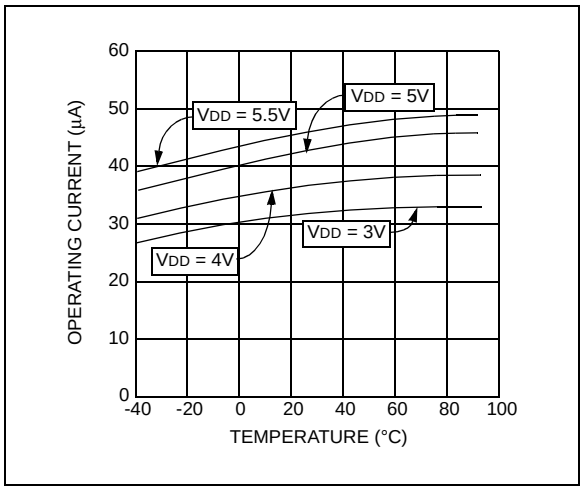

Figure 2-4: *I_{DD} vs. Temperature*

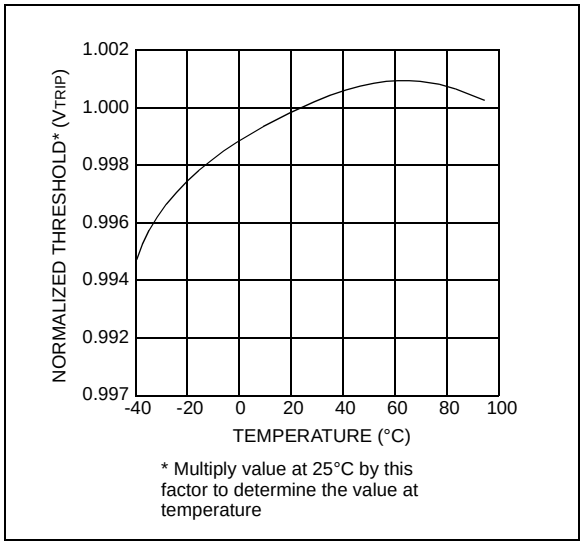

Figure 2-5: *Normalized V_{TRIP} vs. Temperature*

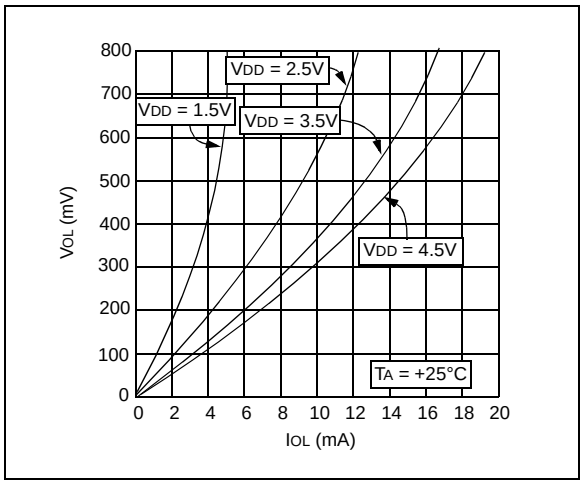

Figure 2-6: *V_{OL} vs. I_{OL}*

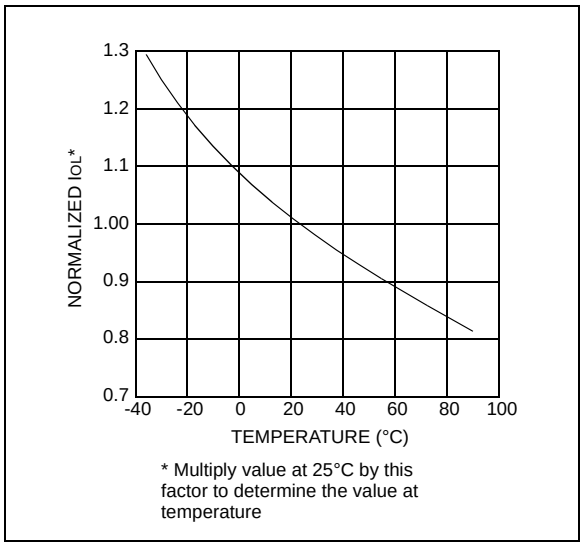

Figure 2-7: *Normalized I_{OL} vs. Temperature*

3.0 PACKAGING INFORMATION

3.1 Package Marking Information

3-Lead Plastic Transistor Outline (TO-92)

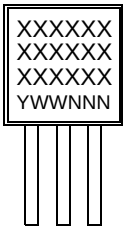

Example:

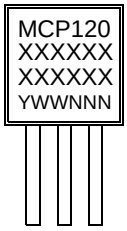

8-Lead Plastic Small Outline (SOIC)

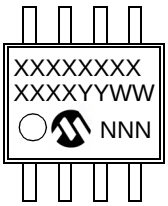

Example:

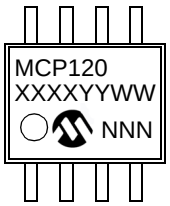

3-Lead Plastic Small Outline Transistor (SOT23)

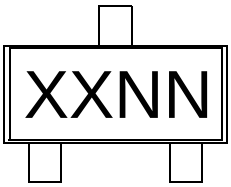

Example:

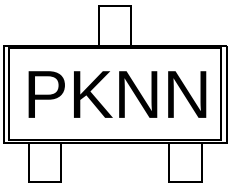

SOT23 PARTS LABELING:

The table below identifies the first 2 characters (XX) in the 4-character field (XXNN) for marking of the 3-Lead SOT23 package.

Mark	Part Number	Mark	Part Number
SJ	MCP120T-270I/TT	PJ	MCP130T-270I/TT
SK	MCP120T-300I/TT	PK	MCP130T-300I/TT
SL	MCP120T-315I/TT	PL	MCP130T-315I/TT
SM	MCP120T-450I/TT	PM	MCP130T-450I/TT
SN	MCP120T-460I/TT	PN	MCP130T-460I/TT
SO	MCP120T-475I/TT	PO	MCP130T-475I/TT
SP	MCP120T-485I/TT	PP	MCP130T-485I/TT

Legend:	XX...X	Customer specific information*
	YY	Year code (last 2 digits of calendar year)
	WW	Week code (week of January 1 is week ‘01’)
	NNN	Alphanumeric traceability code
Note:	In the event the full Microchip part number cannot be marked on one line, it will be carried over to the next line thus limiting the number of available characters for customer specific information.	

* Standard OTP marking consists of Microchip part number, year code, week code, and traceability code. For OTP marking beyond this, certain price adders apply. Please check with your Microchip Sales Office. For QTP devices, any special marking adders are included in QTP price.

© 2001 Microchip Technology Inc.

3.2 Package Detail Information

3-Lead Plastic Transistor Outline (TO) (TO-92)

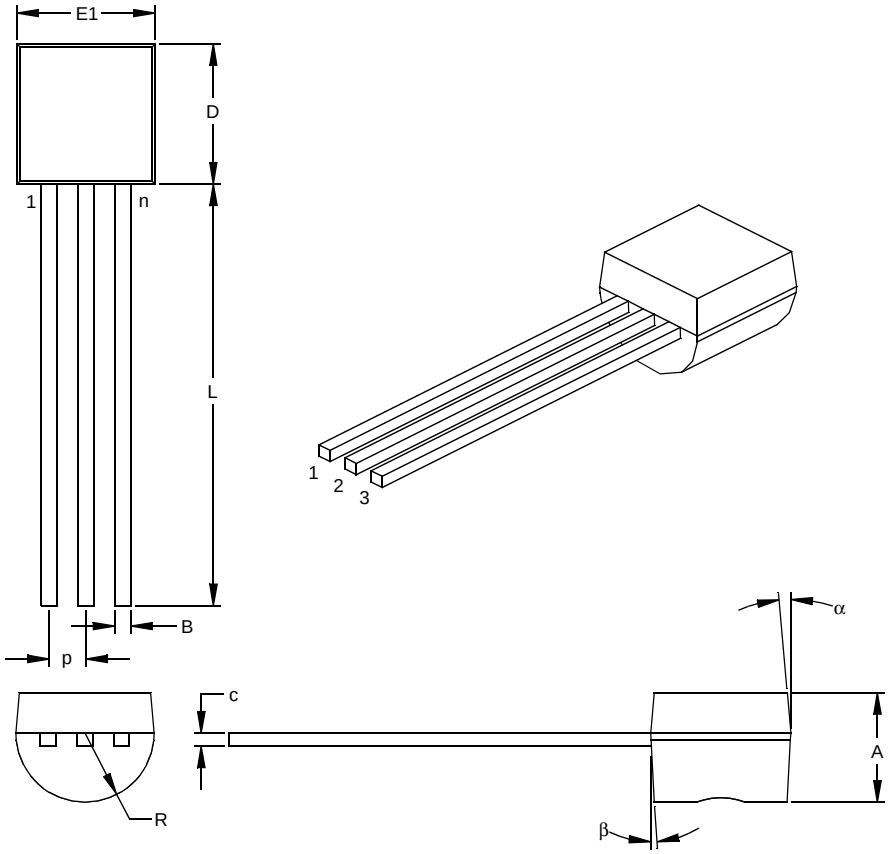

Units		INCHES*			MILLIMETERS		
Dimension Limits		MIN	NOM	MAX	MIN	NOM	MAX
Number of Pins	n		3			3	
Pitch	p		.050			1.27	
Bottom to Package Flat	A	.130	.143	.155	3.30	3.62	3.94
Overall Width	E1	.175	.186	.195	4.45	4.71	4.95
Overall Length	D	.170	.183	.195	4.32	4.64	4.95
Molded Package Radius	R	.085	.090	.095	2.16	2.29	2.41
Tip to Seating Plane	L	.500	.555	.610	12.70	14.10	15.49
Lead Thickness	c	.014	.017	.020	0.36	0.43	0.51
Lead Width	B	.016	.019	.022	0.41	0.48	0.56
Mold Draft Angle Top	α	4	5	6	4	5	6
Mold Draft Angle Bottom	β	2	3	4	2	3	4

*Controlling Parameter

Notes:

Dimensions D and E1 do not include mold flash or protrusions. Mold flash or protrusions shall not exceed .010” (0.254mm) per side.

JEDEC Equivalent: TO-92

Drawing No. C04-101

3-Lead Plastic Small Outline Transistor (TT) (SOT23)

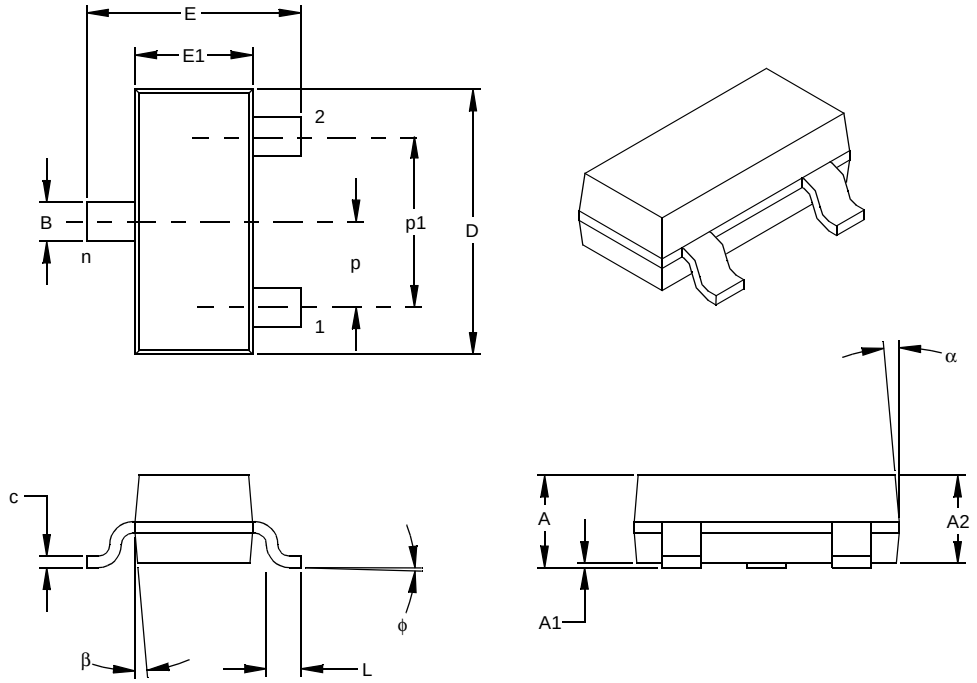

Units		INCHES*			MILLIMETERS		
Dimension Limits		MIN	NOM	MAX	MIN	NOM	MAX
Number of Pins	n		3			3	
Pitch	p		.038			0.96	
Outside lead pitch (basic)	p1		.076			1.92	
Overall Height	A	.035	.040	.044	0.89	1.01	1.12
Molded Package Thickness	A2	.035	.037	.040	0.88	0.95	1.02
Standoff §	A1	.000	.002	.004	0.01	0.06	0.10
Overall Width	E	.083	.093	.104	2.10	2.37	2.64
Molded Package Width	E1	.047	.051	.055	1.20	1.30	1.40
Overall Length	D	.110	.115	.120	2.80	2.92	3.04
Foot Length	L	.014	.018	.022	0.35	0.45	0.55
Foot Angle	ϕ	0	5	10	0	5	10
Lead Thickness	c	.004	.006	.007	0.09	0.14	0.18
Lead Width	B	.015	.017	.020	0.37	0.44	0.51
Mold Draft Angle Top	α	0	5	10	0	5	10
Mold Draft Angle Bottom	β	0	5	10	0	5	10

* Controlling Parameter
§ Significant Characteristic

Notes:
Dimensions D and E1 do not include mold flash or protrusions. Mold flash or protrusions shall not exceed .010” (0.254mm) per side.
JEDEC Equivalent: TO-236
Drawing No. C04-104

© 2001 Microchip Technology Inc.

8-Lead Plastic Small Outline (SN) – Narrow, 150 mil (SOIC

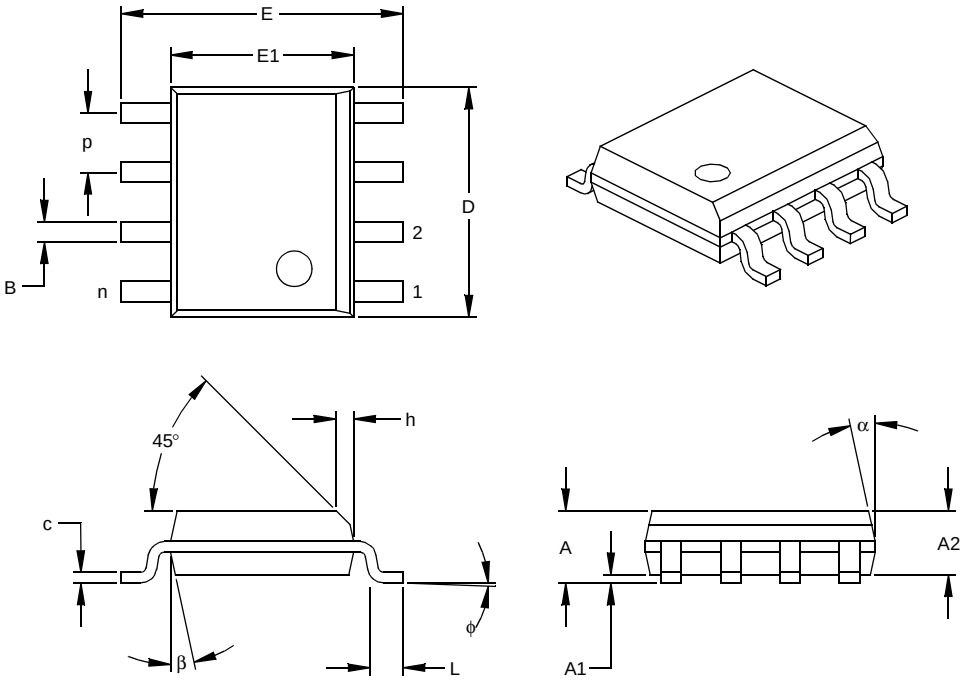

Units		INCHES*			MILLIMETERS		
Dimension Limits		MIN	NOM	MAX	MIN	NOM	MAX
Number of Pins	n		8			8	
Pitch	p		.050			1.27	
Overall Height	A	.053	.061	.069	1.35	1.55	1.75
Molded Package Thickness	A2	.052	.056	.061	1.32	1.42	1.55
Standoff §	A1	.004	.007	.010	0.10	0.18	0.25
Overall Width	E	.228	.237	.244	5.79	6.02	6.20
Molded Package Width	E1	.146	.154	.157	3.71	3.91	3.99
Overall Length	D	.189	.193	.197	4.80	4.90	5.00
Chamfer Distance	h	.010	.015	.020	0.25	0.38	0.51
Foot Length	L	.019	.025	.030	0.48	0.62	0.76
Foot Angle	φ	0	4	8	0	4	8
Lead Thickness	c	.008	.009	.010	0.20	0.23	0.25
Lead Width	B	.013	.017	.020	0.33	0.42	0.51
Mold Draft Angle Top	α	0	12	15	0	12	15
Mold Draft Angle Bottom	β	0	12	15	0	12	15

* Controlling Parameter
§ Significant Characteristic

Notes:
Dimensions D and E1 do not include mold flash or protrusions. Mold flash or protrusions shall not exceed .010” (0.254mm) per side.
JEDEC Equivalent: MS-012
Drawing No. C04-057

ON-LINE SUPPORT

Microchip provides on-line support on the Microchip World Wide Web (WWW) site.

The web site is used by Microchip as a means to make files and information easily available to customers. To view the site, the user must have access to the Internet and a web browser, such as Netscape or Microsoft Explorer. Files are also available for FTP download from our FTP site.

Connecting to the Microchip Internet Web Site

The Microchip web site is available by using your favorite Internet browser to attach to:

www.microchip.com

The file transfer site is available by using an FTP service to connect to:

ftp://ftp.microchip.com

The web site and file transfer site provide a variety of services. Users may download files for the latest Development Tools, Data Sheets, Application Notes, User's Guides, Articles and Sample Programs. A variety of Microchip specific business information is also available, including listings of Microchip sales offices, distributors and factory representatives. Other data available for consideration is:

- Latest Microchip Press Releases
- Technical Support Section with Frequently Asked Questions
- Design Tips
- Device Errata
- Job Postings
- Microchip Consultant Program Member Listing
- Links to other useful web sites related to Microchip Products
- Conferences for products, Development Systems, technical information and more
- Listing of seminars and events

Systems Information and Upgrade Hot Line

The Systems Information and Upgrade Line provides system users a listing of the latest versions of all of Microchip's development systems software products. Plus, this line provides information on how customers can receive any currently available upgrade kits.The Hot Line Numbers are:

1-800-755-2345 for U.S. and most of Canada, and

1-480-792-7302 for the rest of the world.

© 2001 Microchip Technology Inc.

READER RESPONSE

It is our intention to provide you with the best documentation possible to ensure successful use of your Microchip product. If you wish to provide your comments on organization, clarity, subject matter, and ways in which our documentation can better serve you, please FAX your comments to the Technical Publications Manager at (480) 792-7578.

Please list the following information, and use this outline to provide us with your comments about this Data Sheet.

To: Technical Publications Manager Total Pages Sent

RE: Reader Response

From: Name _____

Company _____

Address _____

City / State / ZIP / Country _____

Telephone: (_____) _____ - _____ FAX: (_____) _____ - _____

Application (optional):

Would you like a reply?____Y ____N

Device: **MCP120/130** Literature Number: **DS11184D**

Questions:

1. What are the best features of this document?

_____

_____

2. How does this document meet your hardware and software development needs?

_____

_____

3. Do you find the organization of this data sheet easy to follow? If not, why?

_____

_____

4. What additions to the data sheet do you think would enhance the structure and subject?

_____

_____

5. What deletions from the data sheet could be made without affecting the overall usefulness?

_____

_____

6. Is there any incorrect or misleading information (what and where)?

_____

_____

7. How would you improve this document?

_____

_____

8. How would you improve our software, systems, and silicon products?

_____

_____

NOTES:

© 2001 Microchip Technology Inc.

NOTES:

PRODUCT IDENTIFICATION SYSTEM

To order or to obtain information (e.g., on pricing or delivery), please refer to the factory or the listed sales offices.

PART NO.	X	X	X	/XX
Device	$\overline{\text{RESET}}$/RESET V_{TRIP} Voltage	Bondout Option	Temperature Range	Package

Device:	MCP120:		Supervisor circuit with open drain output
	MCP120T:		Supervisor circuit with open drain output (tape & reel)
	MCP130:		Supervisor circuit with open drain output and internal pull-up resistor
	MCP130T:		Supervisor circuit with open drain output and internal pull-up resistor (tape & reel)
$\overline{\text{RESET}}$/RESET V_{TRIP} Voltage	270	=	$2.55 \le V_{TRIP} \le 2.70$
	300	=	$2.85 \le V_{TRIP} \le 3.00$
	315	=	$3.00 \le V_{TRIP} \le 3.15$
	450	=	$4.25 \le V_{TRIP} \le 4.50$
	460	=	$4.35 \le V_{TRIP} \le 4.60$
	475	=	$4.50 \le V_{TRIP} \le 4.75$
	485	=	$4.60 \le V_{TRIP} \le 4.85$
Bondout Option: (TO-92 Only)	D	=	D Bond Option (see bond option chart)
	F	=	F Bond Option
	G	=	G Bond Option
	H	=	H Bond Option
Temperature Range:	I	=	-40°C to +85°C (only offered in I)
Package:	SN	=	SOIC (8-lead, 150 mil body)
	TO	=	TO-92 (3-lead) [offered in bags only]
	TT	=	SOT-23 (3-lead) [offered in tape & reel only]

Examples:

a) MCP120–270I/SN = V_{TRIP} range of 2.55V - 2.70V, Industrial Temp., SOIC package

b) MCP120–300DI/TO = V_{TRIP} range of 2.85V - 3.00V, Bonding Option D, Industrial Temp., TO-92 package

c) MCP120T–315I/TT = V_{TRIP} range of 3.00V - 3.15V, Industrial Temp., SOT-23 package

d) MCP130–450I/SN = V_{TRIP} range of 4.25V - 4.50V, Industrial Temp., SOIC package

e) MCP130–460FI/TO = V_{TRIP} range of 4.35V - 4.60V, Bonding Option F, Industrial Temp., TO-92 package

f) MCP130T–475I/TT = Tape & Reel, V_{TRIP} range of 4.50V - 4.75V, Industrial Temp., SOT-23 package

TO-92 with 'D' Bondout

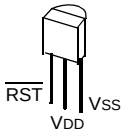

MCP120
MCP130

TO-92 with 'F' Bondout

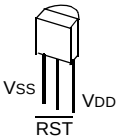

MCP130

TO-92 with 'G' Bondout

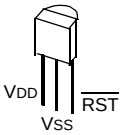

MCP120

TO-92 with 'H' Bondout

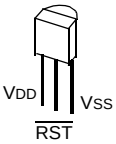

MCP120
MCP130

Sales and Support

Data Sheets
Products supported by a preliminary Data Sheet may have an errata sheet describing minor operational differences and recommended workarounds. To determine if an errata sheet exists for a particular device, please contact one of the following:

1. Your local Microchip sales office
2. The Microchip Corporate Literature Center U.S. FAX: (480) 792-7277
3. The Microchip Worldwide Site (www.microchip.com)

Please specify which device, revision of silicon and Data Sheet (include Literature #) you are using.

New Customer Notification System
Register on our web site (www.microchip.com/cn) to receive the most current information on our products.

© 2001 Microchip Technology Inc.

"All rights reserved. Copyright © 2001, Microchip Technology Incorporated, USA. Information contained in this publication regarding device applications and the like is intended through suggestion only and may be superseded by updates. No representation or warranty is given and no liability is assumed by Microchip Technology Incorporated with respect to the accuracy or use of such information, or infringement of patents or other intellectual property rights arising from such use or otherwise. Use of Microchip's products as critical components in life support systems is not authorized except with express written approval by Microchip. No licenses are conveyed, implicitly or otherwise, under any intellectual property rights. The Microchip logo and name are registered trademarks of Microchip Technology Inc. in the U.S.A. and other countries. All rights reserved. All other trademarks mentioned herein are the property of their respective companies. No licenses are conveyed, implicitly or otherwise, under any intellectual property rights."

Trademarks

The Microchip name, logo, PIC, PICmicro, PICMASTER, PICSTART, PRO MATE, KEELOQ, SEEVAL, MPLAB and The Embedded Control Solutions Company are registered trademarks of Microchip Technology Incorporated in the U.S.A. and other countries.

Total Endurance, ICSP, In-Circuit Serial Programming, FilterLab, MXDEV, microID, FlexROM, fuzzyLAB, MPASM, MPLINK, MPLIB, PICDEM, ICEPIC, Migratable Memory, FanSense, ECONOMONITOR, SelectMode and microPort are trademarks of Microchip Technology Incorporated in the U.S.A.

Serialized Quick Term Programming (SQTP) is a service mark of Microchip Technology Incorporated in the U.S.A.

All other trademarks mentioned herein are property of their respective companies.

© 2001, Microchip Technology Incorporated, Printed in the U.S.A., All Rights Reserved.

DNV Certification, Inc.
USA

ANSI • RAB
QMS
ACCREDITED

DNV MSC
The Netherlands
Accredited by the RvA

DNV

ISO 9001 / QS-9000
REGISTERED FIRM

Microchip received QS-9000 quality system certification for its worldwide headquarters, design and wafer fabrication facilities in Chandler and Tempe, Arizona in July 1999. The Company's quality system processes and procedures are QS-9000 compliant for its PICmicro® 8-bit MCUs, KEELOQ® code hopping devices, Serial EEPROMs and microperipheral products. In addition, Microchip's quality system for the design and manufacture of development systems is ISO 9001 certified.

WORLDWIDE SALES AND SERVICE

AMERICAS

Corporate Office
2355 West Chandler Blvd.
Chandler, AZ 85224-6199
Tel: 480-792-7200 Fax: 480-792-7277
Technical Support: 480-792-7627
Web Address: http://www.microchip.com

Rocky Mountain
2355 West Chandler Blvd.
Chandler, AZ 85224-6199
Tel: 480-792-7966 Fax: 480-792-7456

Atlanta
500 Sugar Mill Road, Suite 200B
Atlanta, GA 30350
Tel: 770-640-0034 Fax: 770-640-0307

Austin
Analog Product Sales
8303 MoPac Expressway North
Suite A-201
Austin, TX 78759
Tel: 512-345-2030 Fax: 512-345-6085

Boston
2 Lan Drive, Suite 120
Westford, MA 01886
Tel: 978-692-3848 Fax: 978-692-3821

Boston
Analog Product Sales
Unit A-8-1 Millbrook Tarry Condominium
97 Lowell Road
Concord, MA 01742
Tel: 978-371-6400 Fax: 978-371-0050

Chicago
333 Pierce Road, Suite 180
Itasca, IL 60143
Tel: 630-285-0071 Fax: 630-285-0075

Dallas
4570 Westgrove Drive, Suite 160
Addison, TX 75001
Tel: 972-818-7423 Fax: 972-818-2924

Dayton
Two Prestige Place, Suite 130
Miamisburg, OH 45342
Tel: 937-291-1654 Fax: 937-291-9175

Detroit
Tri-Atria Office Building
32255 Northwestern Highway, Suite 190
Farmington Hills, MI 48334
Tel: 248-538-2250 Fax: 248-538-2260

Los Angeles
18201 Von Karman, Suite 1090
Irvine, CA 92612
Tel: 949-263-1888 Fax: 949-263-1338

Mountain View
Analog Product Sales
1300 Terra Bella Avenue
Mountain View, CA 94043-1836
Tel: 650-968-9241 Fax: 650-967-1590

New York
150 Motor Parkway, Suite 202
Hauppauge, NY 11788
Tel: 631-273-5305 Fax: 631-273-5335

San Jose
Microchip Technology Inc.
2107 North First Street, Suite 590
San Jose, CA 95131
Tel: 408-436-7950 Fax: 408-436-7955

Toronto
6285 Northam Drive, Suite 108
Mississauga, Ontario L4V 1X5, Canada
Tel: 905-673-0699 Fax: 905-673-6509

ASIA/PACIFIC

Australia
Microchip Technology Australia Pty Ltd
Suite 22, 41 Rawson Street
Epping 2121, NSW
Australia
Tel: 61-2-9868-6733 Fax: 61-2-9868-6755

China - Beijing
Microchip Technology Beijing Office
Unit 915
New China Hong Kong Manhattan Bldg.
No. 6 Chaoyangmen Beidajie
Beijing, 100027, No. China
Tel: 86-10-85282100 Fax: 86-10-85282104

China - Shanghai
Microchip Technology Shanghai Office
Room 701, Bldg. B
Far East International Plaza
No. 317 Xian Xia Road
Shanghai, 200051
Tel: 86-21-6275-5700 Fax: 86-21-6275-5060

Hong Kong
Microchip Asia Pacific
RM 2101, Tower 2, Metroplaza
223 Hing Fong Road
Kwai Fong, N.T., Hong Kong
Tel: 852-2401-1200 Fax: 852-2401-3431

India
Microchip Technology Inc.
India Liaison Office
Divyasree Chambers
1 Floor, Wing A (A3/A4)
No. 11, O'Shaugnessey Road
Bangalore, 560 025, India
Tel: 91-80-2290061 Fax: 91-80-2290062

Japan
Microchip Technology Intl. Inc.
Benex S-1 6F
3-18-20, Shinyokohama
Kohoku-Ku, Yokohama-shi
Kanagawa, 222-0033, Japan
Tel: 81-45-471- 6166 Fax: 81-45-471-6122

ASIA/PACIFIC (continued)

Korea
Microchip Technology Korea
168-1, Youngbo Bldg. 3 Floor
Samsung-Dong, Kangnam-Ku
Seoul, Korea
Tel: 82-2-554-7200 Fax: 82-2-558-5934

Singapore
Microchip Technology Singapore Pte Ltd.
200 Middle Road
#07-02 Prime Centre
Singapore, 188980
Tel: 65-334-8870 Fax: 65-334-8850

Taiwan
Microchip Technology Taiwan
11F-3, No. 207
Tung Hua North Road
Taipei, 105, Taiwan
Tel: 886-2-2717-7175 Fax: 886-2-2545-0139

EUROPE

Denmark
Microchip Technology Denmark ApS
Regus Business Centre
Lautrup hoj 1-3
Ballerup DK-2750 Denmark
Tel: 45 4420 9895 Fax: 45 4420 9910

France
Arizona Microchip Technology SARL
Parc d'Activite du Moulin de Massy
43 Rue du Saule Trapu
Batiment A - ler Etage
91300 Massy, France
Tel: 33-1-69-53-63-20 Fax: 33-1-69-30-90-79

Germany
Arizona Microchip Technology GmbH
Gustav-Heinemann Ring 125
D-81739 Munich, Germany
Tel: 49-89-627-144 0 Fax: 49-89-627-144-44

Germany
Analog Product Sales
Lochhamer Strasse 13
D-82152 Martinsried, Germany
Tel: 49-89-895650-0 Fax: 49-89-895650-22

Italy
Arizona Microchip Technology SRL
Centro Direzionale Colleoni
Palazzo Taurus 1 V. Le Colleoni 1
20041 Agrate Brianza
Milan, Italy
Tel: 39-039-65791-1 Fax: 39-039-6899883

United Kingdom
Arizona Microchip Technology Ltd.
505 Eskdale Road
Winnersh Triangle
Wokingham
Berkshire, England RG41 5TU
Tel: 44 118 921 5869 Fax: 44-118 921-5820

01/30/01

All rights reserved. © 2001 Microchip Technology Incorporated. Printed in the USA. 2/01 Printed on recycled paper.

Information contained in this publication regarding device applications and the like is intended through suggestion only and may be superseded by updates. It is your responsibility to ensure that your application meets with your specifications. No representation or warranty is given and no liability is assumed by Microchip Technology Incorporated with respect to the accuracy or use of such information, or infringement of patents or other intellectual property rights arising from such use or otherwise. Use of Microchip's products as critical components in life support systems is not authorized except with express written approval by Microchip. No licenses are conveyed, implicitly or otherwise, except as maybe explicitly expressed herein, under any intellectual property rights. The Microchip logo and name are registered trademarks of Microchip Technology Inc. in the U.S.A. and other countries. All rights reserved. All other trademarks mentioned herein are the property of their respective companies.