SH-1: SH7032/SH7034 Product Brief

SH7000 Series 32-Bit RISC Embedded Controller

HITACHI

PMH11TO003D2
Rev 0.2
January 16, 1997

Overview

The SH7000 series is a reduced instruction set computer (RISC) in which a Hitachi-original CPU and the peripheral functions required for system configuration are integrated onto a single chip.

The CPU has a RISC-type instruction set. Most instructions can be executed in one clock cycle, dramatically improving instruction execution speed. In addition, the CPU has a 32-bit internal architecture for enhanced data-processing ability. As a result, the SH7032/SH7034 enable high-performance systems to be constructed with advanced functionality at low cost, even in applications such as real-time control that require operations at very high speeds.

The SH microcomputer includes peripheral functions such as large-capacity ROM, RAM, a direct memory access controller (DMAC), timers, a serial communication interface (SCI), an A/D converter, an interrupt controller (INTC), and I/O ports. External memory access support functions enable direct interface to PSRAM and DRAM. These features can drastically reduce system cost.

For on-chip ROM, masked ROM or electrically programmable ROM (PROM) can be selected. The PROM version can be programmed by users with a general-purpose EPROM programmer.

Features

- 20 MHz at 5 V, 12.5 MHz at 3.3 V
- SH7032: ROMless, 8-kbyte RAM
- SH7034: 64-kbyte ROM/EPROM, 4-kbyte RAM
- SuperH™ RISC engine (CPU)
  - 32-bit internal data paths/32-bit external data paths
  - 16-bit fixed instruction set
  - Five-stage pipeline
  - Load/store register architecture
  - Sixteen 32-bit general registers, three 32-bit control registers, and four 32-bit system registers
- On-chip multiply and accumulate unit
  - Multiplication operations ($32 \times 32 \rightarrow 64$ bits) executed in 2 to 3 cycles
  - MAC operations ($32 \times 32 \rightarrow 64 + 64$ bits) executed in 2 to 3 cycles
- Processing states:
  - Power-on reset/manual reset
  - Exception processing

  - Program execution
  - Power-down (sleep, standby, and module stop modes)
  - Bus-released
- Bus State Controller (BSC)
  - Supports interface to PSRAM, DRAM, ROM, and peripheral I/O
  - DRAM refresh and burst access functions
  - One-stage write buffer for improved system performance
  - 16/8-bit bus width for addressing options
  - Number of wait states variable
- Four-channel Direct Memory Access Controller (DMAC)
  - DMA transfers between on-chip or external memory, I/O, and peripheral modules
  - Selectable priorities and modes
  - Dual or single address transfer mode, external request resources mode, and dual address transfer mode for internal request sources supported
- Interrupt Controller (INTC)
  - Nine external interrupt pins
  - Thirty-one internal interrupt sources
  - Sixteen programmable priority levels
- Five-channel 16-bit Integrated Timer Unit (ITU)
  - Ten waveforms can be output
  - PWM modes
  - Counters, input capture/measurement
- Watchdog Timer (WDT)
- Programmable Timing Pattern Controller with maximum 16-bit output (4 bits × 4 channels)
- 10-bit/8-channel A/D Converter with variable voltage reference and external triggering capability
- Two-channel SCI with full duplex and asynchronous/synchronous selectable modes
- 32 I/O, plus 8 input only ports
- User Break Controller (UBC) for generating interrupts to simplify debugging
- Operating temperature: –20°C to 75°C
- Package: 112-pin Quad Flat Pack (QFP)
- Process: 0.8-micron technology
- Complete development systems support

Related Manuals

- *SH Series Overview*
- *SH7032/7034 Hardware Manual*
- *SH7000/7600 Programming Manual*

See also http://www.halsp.hitachi.com.

Block Diagram

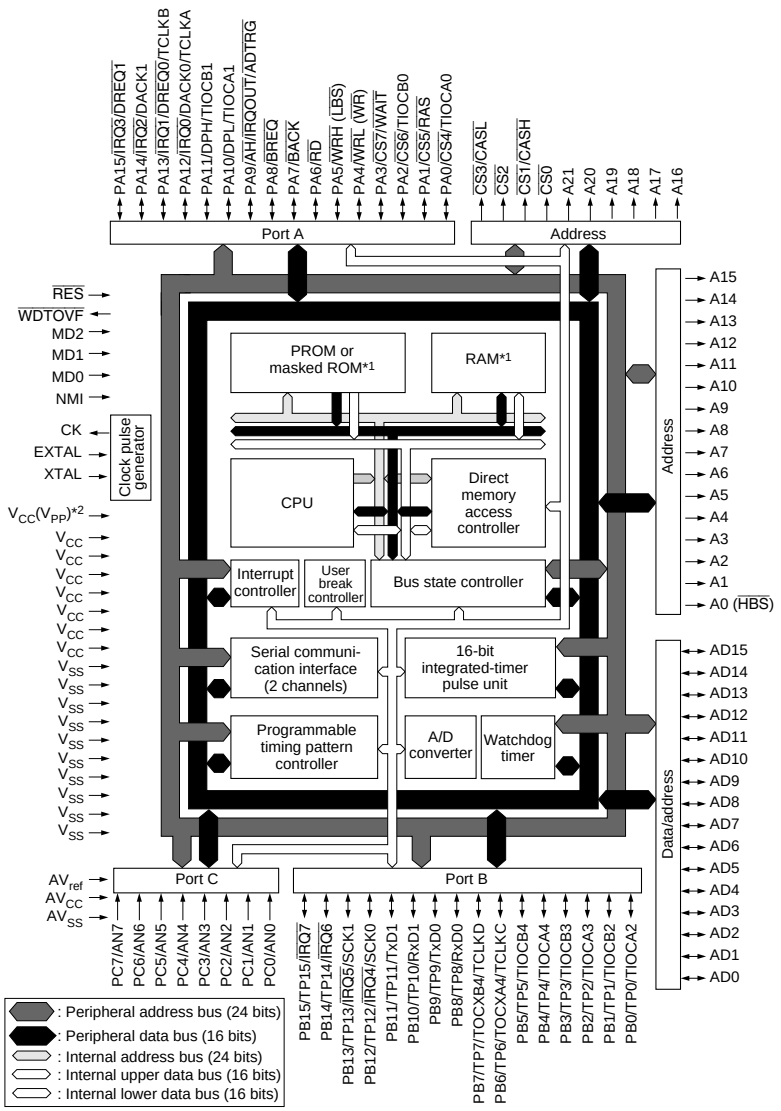

Notes: 1. The SH7032 has 8 kB of RAM and no PROM or Masked ROM. The SH7034 has 4 kB of RAM and 64 kB of PROM or Masked ROM.

Block Diagram (SH7032/7034)

Instruction Set By Classification (Total: 56 Types)

Table 1 Data Transfer (5 Types)

Operation Code	Function
MOV	Data transfer, immediate data transfer, peripheral module, and structural data transfers
MOVA	Effective address transfer
MOVT	T-bit transfer
SWAP	Swap of upper and lower bytes
XTRCT	Extraction of middle of connected registers

Table 2 Arithmetic Operations (17 Types)

Operation Code	Function
ADD	Binary addition
ADDC	Binary addition with carry
ADDV	Binary addition with overflow check
CMP/cond.	Comparison
DIV1	Division
DIV0S	Initialization of signed division
DIV0U	Initialization of unsigned division
EXTS	Sign extension
EXTU	Zero extension
MAC	Multiplication and accumulation
MULS	Signed multiplication
MULU	Unsigned multiplication
NEG	Negation
NEGC	Negation with carry
SUB	Binary subtraction
SUBC	Binary subtraction with carry
SUBV	Binary subtraction with underflow check

Table 3 Logic Operations (6 Types)

Operation Code	Function
AND	Logic AND
NOT	Bit inversion
OR	Logical OR
TAS	Memory test and bit set
TST	Logical AND and T bit set
XOR	Exclusive OR

Table 4 Shift Instructions (10 Types)

Operation Code	Function
ROTL	One-bit left rotation
ROTR	One-bit right rotation
ROTCL	One-bit left rotation with T bit
ROTCR	One-bit right rotation with T bit
SHAL	One-bit arithmetic left shift
SHAR	One-bit arithmetic right shift
SHLL	One-bit logical left shift
SHLLn	n-bit logical left shift
SHLR	One-bit logical right shift
SHLRn	n-bit logical right shift

Table 5 Branch Instructions (7 Types)

Operation Code	Function
BF	Conditional branch (T = 0)
BT	Conditional branch (T = 1)
BRA	Unconditional branch
BSR	Branch to subroutine procedure
JMP	Unconditional branch
JSR	Branch to subroutine procedure
RTS	Return from subroutine procedure

Table 6 System Control (11 Types)

Operation Code	Function
CLRT	T bit clear
CLRMAC	MAC register clear
LDC	Load to control register
LDS	Load to system register
NOP	No operation
RTE	Return from exception processing
SETT	T bit set
SLEEP	Shift into power-down mode
STC	Storing control register data
STS	Storing system register data
TRAPA	Trap exception processing

DC Characteristics

Table 7 Current Consumption*[3]

Item	Symbol	Min	Typ	Max	Unit	Measurement Conditions
Ordinary operation	I_{cc}	—	60	90	mA	f = 12.5 MHz
Ordinary operation	I_{cc}	—	80	110	mA	f = 16.6 MHz
Sleep	I_{cc}	—	40	70	mA	f = 12.5 MHz
Sleep	I_{cc}	—	50	80	mA	f = 16.6 MHz
Standby	I_{cc}	—	0.01	5*[1]	µA	Ta ≤ 50°C
Standby	I_{cc}	—	—	20.0*[2]	µA	50°C < Ta

Notes: 1. 50 µA for the SH7032.
2. 300 µA for the SH7032.
3 Conditions: V_{cc} = 5.0 V ±10%, A V_{cc} = 5.0 V ±10%, A V_{cc} = V_{cc} ±10%, AVref = 4.5 V to A V_{cc} , V_{ss} = AV_{ss} = 0 V, f = 20 MHz, Ta = –20 to +75°C for normal products, Ta = –40 to +85°C for wide-temperature range products.

AC Characteristics

Table 8 LSI Clock Frequency

		Case A		Case B					
		12.5 MHz		16.6 MHz		20 MHz			
Item	**Symbol**	**Min**	**Max**	**Min**	**Max**	**Min**	**Max**	**Unit**	**Figures**
EXTAL input high level pulse width	t_{EXH}	20	—	10	—	10	—	ns	1
EXTAL input low level pulse width	t_{EXL}	20	—	10	—	10	—	ns	1
EXTAL input rise time	t_{EXr}	—	10	—	5	—	5	ns	1
EXTAL input fall time	t_{EXf}	—	10	—	5	—	5	ns	1
Clock cycle time	t_{cyc}	80	500	60	500	50	500	ns	1, 2
Clock high pulse width	t_{CH}	30	—	20	—	20	—	ns	2
Clock low pulse width	t_{CL}	30	—	20	—	20	—	ns	2
Clock rise time	t_{Cr}	—	10	—	5	—	5	ns	2
Clock fall time	t_{Cf}	—	10	—	5	—	5	ns	2
Reset oscillation settling time	t_{OSC1}	10	—	10	—	10	—	ms	3
Software standby oscillation settling time	t_{oSC2}	10	—	10	—	10	—	ms	3

Notes: 1. Case A: V_{cc} = 3.0 to 5.5 V, AV_{cc} = 3.0 to 5.5 V, AV_{cc} = V_{cc} ±10%, AVref = 3.0 V to AV_{cc} , V_{ss} = AV_{ss} = 0 V, f = 20 MHz, Ta = –20 to +75°C

2. Case B: V_{cc} = 5.0 V ±10%, AV_{cc} = 5.0 V ±10%, AV_{cc} = V_{cc} ±10%, AV ref = 4.5 V to AV_{cc} , V_{ss} = AV_{ss} = 0 V, f = 20 MHz, Ta = –20 to +75°C for normal products; Ta = –40 to +85°C for wide-temperature range products.

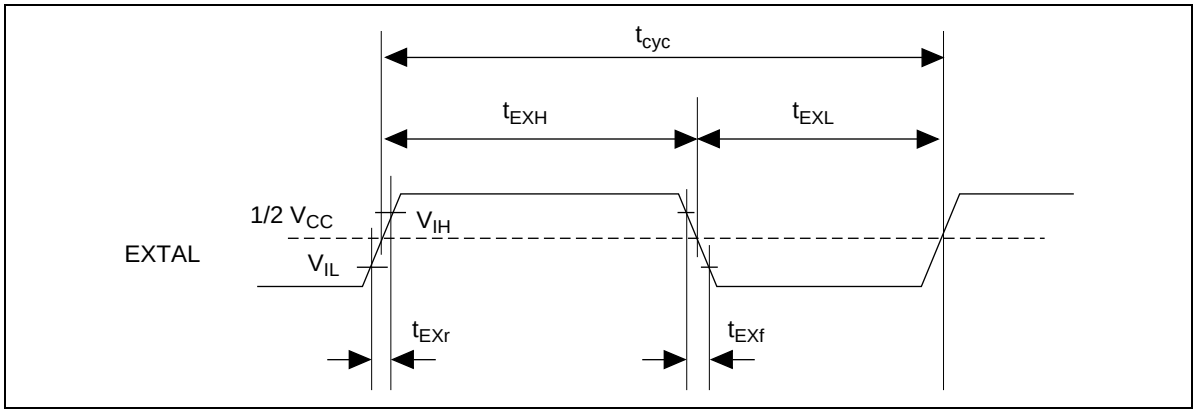

Figure 1 EXTAL Input Timing

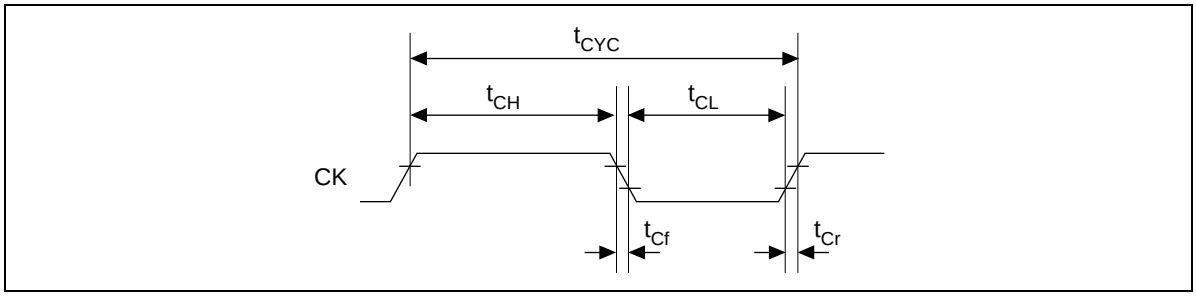

Figure 2 System Clock Timing

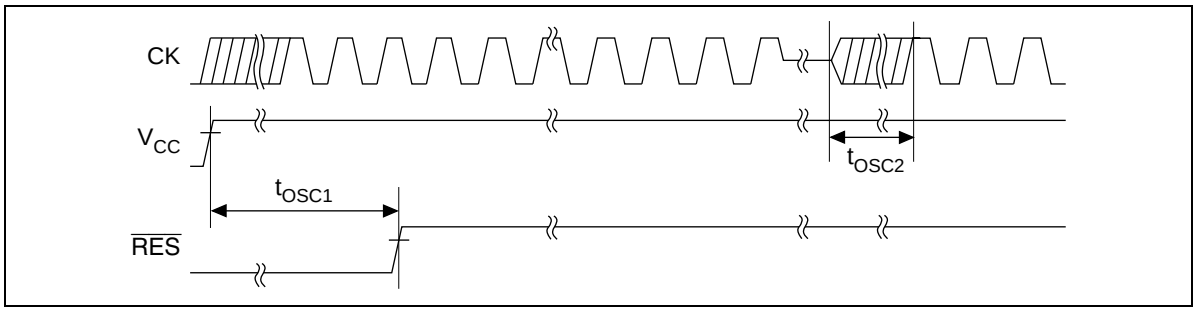

Figure 3 Oscillation Settling Time

Pin Diagram

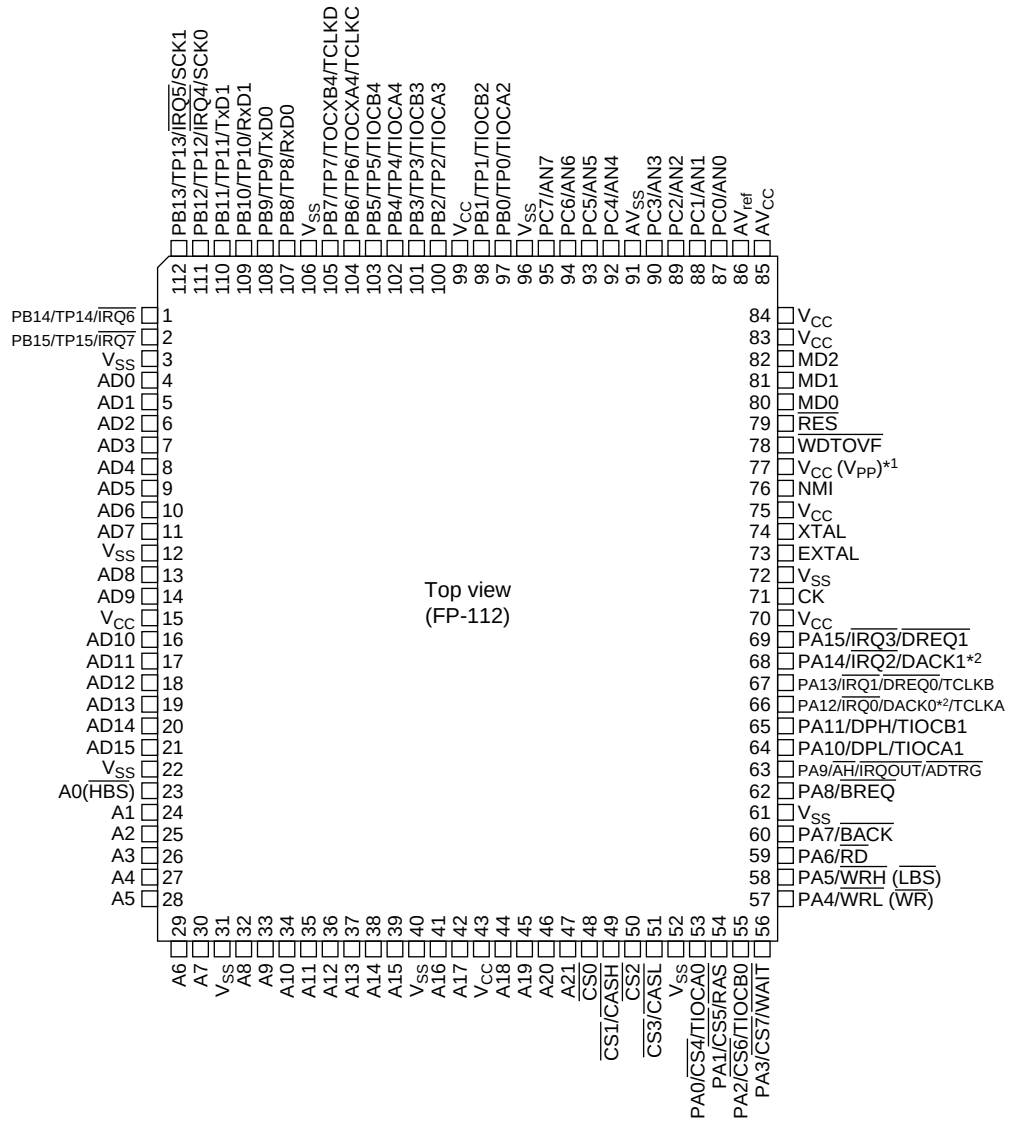

Notes: 1. V_{CC}: SH7032, SH7034 (Masked ROM version) V_{PP}: SH7034 (PROM version)
2. Initial value (output)

Package Dimensions

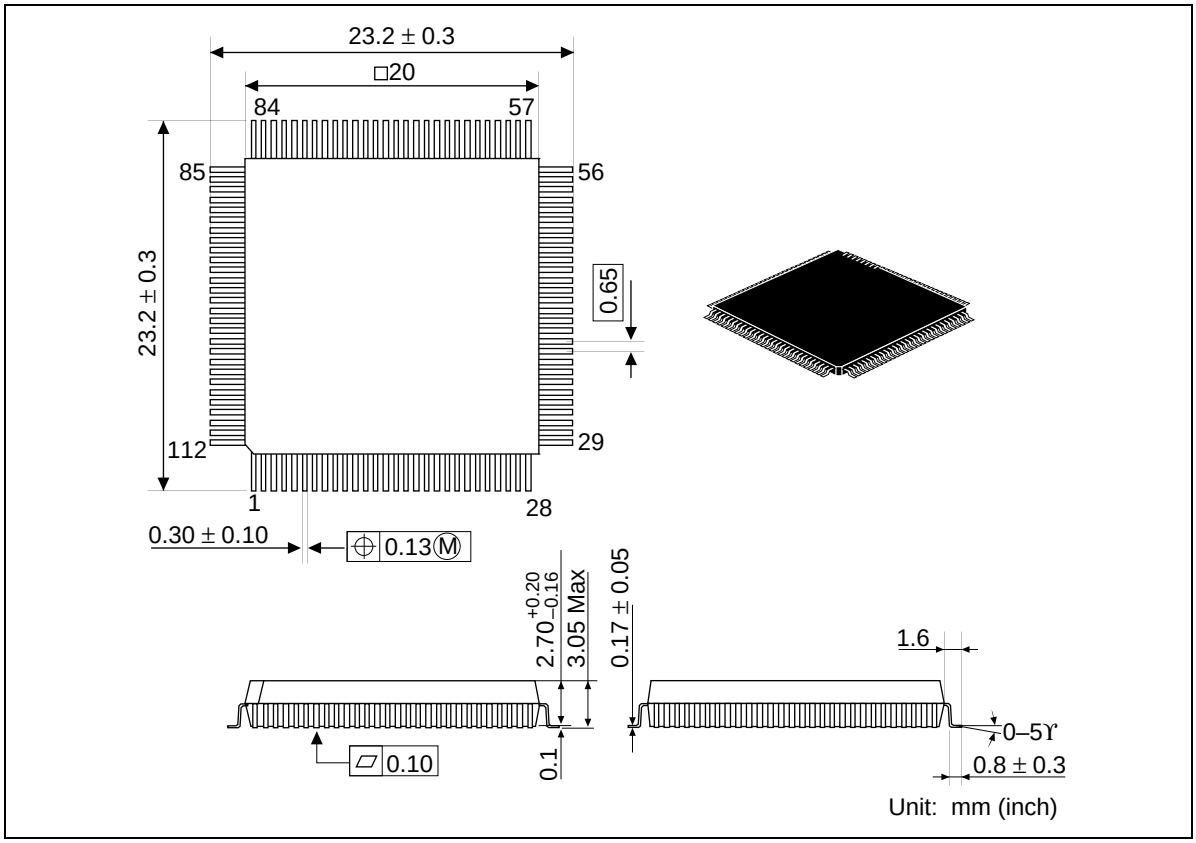

When using this document, keep the following in mind:

1. This document may, wholly or partially, be subject to change without notice.
2. All rights are reserved: No one is permitted to reproduce or duplicate, in any form, the whole or part of this document without Hitachi's permission.
3. Hitachi will not be held responsible for any damage to the user that may result from accidents or any other reasons during operation of the user's unit according to this document.
4. Circuitry and other examples described herein are meant merely to indicate the characteristics and performance of Hitachi's semiconductor products. Hitachi assumes no responsibility for any intellectual property claims or other problems that may result from applications based on the examples described herein.
5. No license is granted by implication or otherwise under any patents or other rights of any third party or Hitachi, Ltd.
6. MEDICAL APPLICATIONS: Hitachi's products are not authorized for use in MEDICAL APPLICATIONS without the written consent of the appropriate officer of Hitachi's sales company. Such use includes, but is not limited to, use in life support systems. Buyers of Hitachi's products are requested to notify the relevant Hitachi sales offices when planning to use the products in MEDICAL APPLICATIONS.