QUALITY SEMICONDUCTOR, INC.

High-Speed CMOS 3.3V 20-Bit Buffer with Output Resistor

QS74LCX162827

PRELIMINARY

FEATURES/BENEFITS

- 5V tolerant inputs and outputs
- 25Ω series resistor for low switching noise
- 10µA I_{CCQ} quiescent power supply current
- Hot insertable
- 2.0V-3.6V V_{CC} supply operation
- ±12mA balanced output drive
- Power down high impedance inputs and outputs
- t_{PD} = 6.5ns
- Input hysteresis for noise immunity
- Meets or exceeds JEDEC Standard 36 specifications
- Multiple power and ground pins for low noise
- Operating temperature range:
  –40°C to 85°C
- Latch-up performance exceeds 500mA
- ESD performance:
  Human body model > 2000V
  Machine model > 200V
- Packages available:
  56-pin TSSOP
  56-pin SSOP

DESCRIPTION

The QS74LCX162827 is a 20-bit buffer that is ideal for driving address and data buses. The 3.3V LCXPlus family features low power, low switching noise, and fast switching speeds for low power portable applications as well as high-end, advanced workstation applications. 5V tolerant inputs and outputs allow this LCXPlus product to be used in mixed 5V and 3.3V applications. The QS74LCX162827 with integrated output resistor is ideally suited for low noise environments where reduced output overshoot and undershoot are critical requirements. Easy board layout is facilitated by the use of flow-through pinouts and byte enable controls provide architectural flexibility for systems designers. To accommodate hot-plug or live insertion applications, this product is designed not to load an active bus when V_{CC} is removed.

Figure 1. Functional Block Diagram

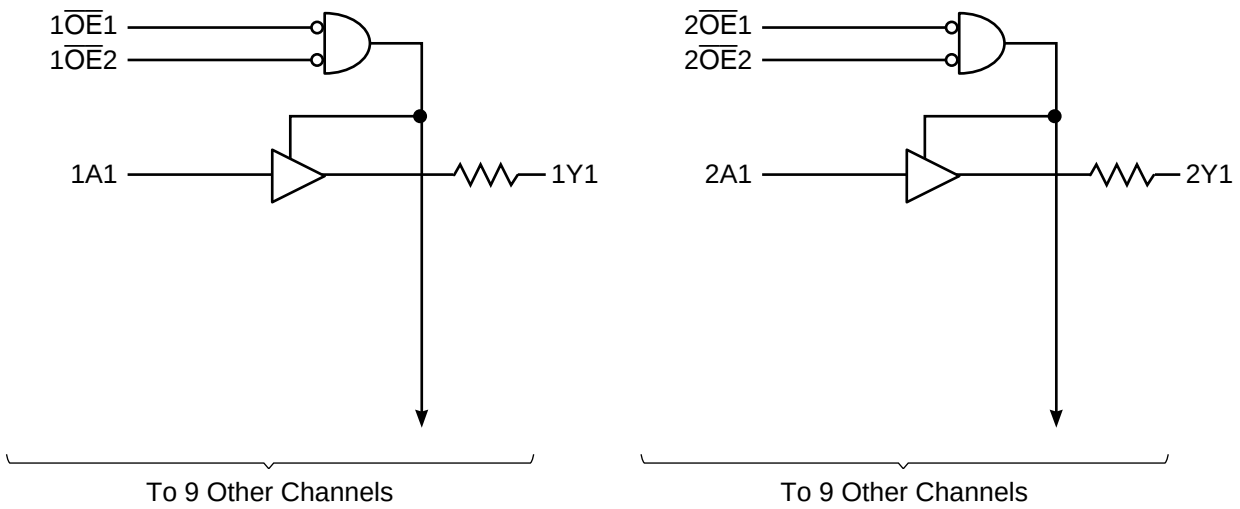

Figure 2. Pin Configuration
(All Pins Top View)

SSOP, TSSOP

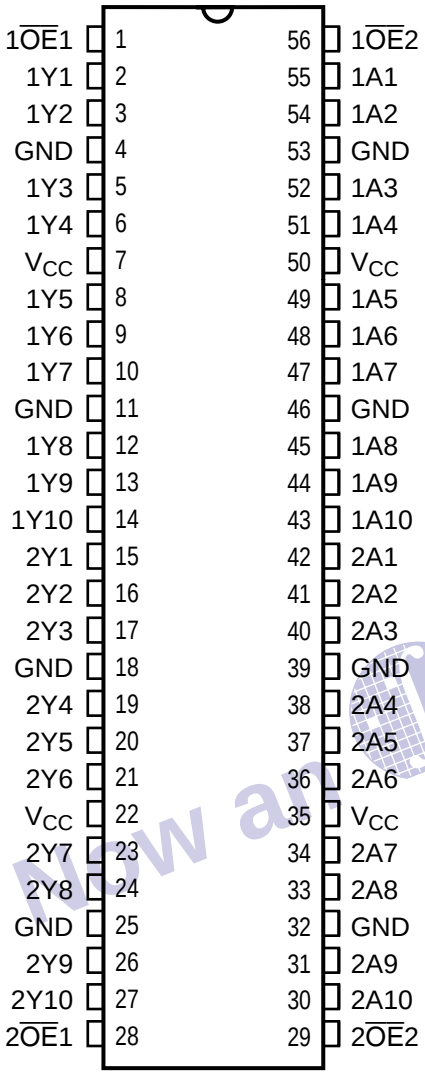

Table 1. Pin Description

Name	Description
x$\overline{OE}$x	Output Enables
xAx	Data Inputs
xYx	Data Outputs

Table 2. Function Table

Inputs			Output	
$\overline{OE}$1	$\overline{OE}$2	xAx	xYx	Function
L	L	L	L	Enabled
L	L	H	H	Enabled
H	—	—	Hi-Z	High Impedance
—	H	—	Hi-Z	High Impedance

Table 3. Capacitance

Symbol	Pins	Typ	Unit	Conditions
C_{IN}	Input Capacitance	7.0	pF	V_{IN} = 0V, V_{OUT} = 0V, f = 1MHz
$C_{I/O}$	I/O Capacitance	8.0	pF	V_{IN} = 0V, V_{OUT} = 0V, f = 1MHz
C_{PD}	Power Dissipation Capacitance	25	pF	V_{CC} = 3.3V, V_{IN} = 0 or V_{CC} f = 10MHz

Note: Capacitance is characterized but not production tested.

Table 4. Absolute Maximum Ratings

Supply Voltage to Ground ..... –0.5V to 7.0V
DC Output Voltage V_{OUT}
Outputs HIGH-Z ..... –0.5V to 7.0V
Outputs Active ..... –0.5V to V_{CC} + 0.5V
DC Input Voltage V_{IN} ..... –0.5V to 7.0V
DC Input Diode Current with V_{IN} < 0 ..... –50mA
DC Output Diode Current
V_O < 0 ..... –50mA
V_O > V_{CC} 50mA
DC Output Source/Sink Current (I_{OH}/I_{OL}) ..... ±50mA
DC Supply Current per Supply Pin ..... ±100mA
DC Ground Current per Ground Pin ..... ±100mA
T_{STG} Storage Temperature ..... –65°C to 150°C

Note: Stresses greater than those listed under ABSOLUTE MAXIMUM RATINGS may cause permanent damage to this device resulting in functional or reliability type failures.

Table 5. Recommended Operating Conditions

Symbol	Parameter		Min	Max	Unit
V_{CC}	Supply Voltage, Operating		2.0	3.6	V
	Supply Voltage, Data Retention Only		1.5	3.6	
V_{IN}	Input Voltage		0	5.5	V
V_{OUT}	Output Voltage in Active State		0	V_{CC}	V
V_{OUT}	Output Voltage in "OFF" State		0	5.5	V
I_{OH}/I_{OL}	Output Current	V_{CC} = 3.0 – 3.6V	—	±12	mA
		V_{CC} = 2.7V		±6	
Δt/Δv	Input Transition Slew Rate		—	10	ns/V
T_A	Operating Free Air Tempeature		–40	85	°C

Table 6. DC Electrical Characteristics Over Operating Range

Industrial Temperature Range, T_A = –40°C to 85°C

Symbol	Parameter	Test Conditions[1]	Min	Typ[2]	Max	Unit
V_{IH}	Input HIGH Voltage	Logic HIGH for All Inputs	2.0	—	—	V
V_{IL}	Input LOW Voltage	Logic LOW for All Inputs	—	—	0.8	V
V_{OH}	Output HIGH Voltage	V_{CC} = 2.7V, I_{OH} = –100µA V_{CC} = 3.0V, I_{OH} = –12mA V_{CC} = 3.0V, I_{OH} = –18mA	V_{CC}–0.2 2.4 2.2	— — —	— — —	V
V_{OL}	Output LOW Voltage	V_{CC} = 2.7V, I_{OL} = 100µA V_{CC} = 3.0V, I_{OL} = 12mA V_{CC} = 3.0V, I_{OL} = 18mA	— — —	— — —	0.2 0.55 0.8	V
R_{OUT}	Output Resistance	V_{CC} = 3.0V, I_{OL} = 12mA	—	28	—	Ω
ΔV_T	Input Hysteresis[3]	V_{TLH} – V_{THL} for All Inputs	—	150	—	mV
I_I	Input Leakage Current	V_{CC} = Max., V_I = 0V, V_I = 5.5V	—	—	±1.0	µA
I_{OZ}	High-Z I/O Leakage	V_{CC} = Max., V_O = 0V V_O = 5.5V, V_I = V_{IH} or V_{IL}	—	—	±1.0	µA
I_{OS}	Short Circuit Current[3,4]	V_{CC} = 3.6V, V_O = GND	–60	—	–200	mA
I_{OR}	Current Drive	V_{CC} = 3.6V, V_{OUT} = 2.0V	40	—	—	mA
I_{OFF}	Power Off Leakage	V_{CC} = 0V, V_I or V_O = 5.5V	—	—	10	µA
V_{IK}	Input Clamp Voltage	V_{CC} = 2.7V, I_{IN} = –18mA	—	–0.7	–1.2	V

Notes:
1. For conditions shown as Min. or Max., use appropriate value specified under Recommended Operating Conditions for the appropriate device type.
2. Typical values are at V_{CC} = 3.3V, and T_A = 25°C.
3. These parameters are guaranteed by characterization, but not production tested.
4. Not more than one output should be tested at one time. Duration of test should not exceed one second.

Table 7. Power Supply Characteristics

Symbol	Parameter	Test Conditions[1]		Typ [2]	Max	Unit
I_{CC}	Quiescent Power Supply Current	V_{CC} = 3.6V, Freq = 0 V_{IN} = GND or V_{CC}		0.1	10	µA
ΔI_{CC}	Supply Current per Input @ TTL HIGH	V_{CC} = 3.6V, V_{IN} = V_{CC}-0.6V[3]		2.0	30	µA
I_{CCD}	Supply Current per Input per MHz[4]	V_{CC} = 3.6V, Outputs Open One Bit Toggling @ 50% Duty Cycle x$\overline{OE}$ = GND		65	100	µA/ MHz
I_C	Total Power Supply Current[6]	V_{CC} = 3.6V, Outputs Open One Bit Toggling @ 50% Duty Cycle x$\overline{OE}$ = GND, f = 10MHz	V_{IN} = V_{CC}-0.6V V_{IN} = GND	0.5[5]	0.8[5]	mA
		V_{CC} = 3.6V, Outputs Open Twenty Bits Toggling @ 50% Duty Cycle x$\overline{OE}$ = GND, f = 2.5MHz	V_{IN} = V_{CC}-0.6V V_{IN} = GND	3.3[5]	5.4[5]	

Notes:
1. For conditions shown as Min. or Max., use the appropriate values specified under Recommended Operating Conditions for applicable device type.
2. Typical values are at V_{CC} = 3.3V, 25°C ambient.
3. Per TTL driven input. All other inputs at V_{CC} or GND.
4. This parameter is not directly testable, but is derived for use in total power supply calculations.
5. Values for these conditions are examples of the I_{CC} formula. These limits are guaranteed by design but not tested.
6. $I_C = I_{QUIESCENT} + I_{INPUTS} + I_{DYNAMIC}$.
   $I_C = I_{CCQ} + \Delta I_{CC} D_H N_T + I_{CCD} f N_O$.
   I_{CCQ} = Quiescent Current (I_{CCL}, I_{CCH}, and I_{CCZ}).
   ΔI_{CC} = Power Supply Current for a TTL-High Input (V_{IN} = V_{CC}-0.6V).
   D_H = Duty Cycle for TTL High Inputs.
   N_T = Number of TTL High Inputs.
   I_{CCD} = Dynamic Current Caused by an Input Transition Pair (HLH or LHL).
   f = Average Switching Frequency per Output
   N_O = Number of Outputs Switching

Table 8. Dynamic Switching Characteristics[1]

Symbol	Parameter	Conditions	V_{CC} (V)	T_A = 25°C Typical	Units
V_{OLP}	Quiet Output Dynamic Peak V_{OL}	C_L = 30pF, V_{IH} = 3.3V, V_{IL} = 0V	3.3	0.8	V
V_{OLV}	Quiet Output Dynamic Valley V_{OL}	C_L = 30pF, V_{IH} = 3.3V, V_{IL} = 0V	3.3	0.8	V

Note:
1. Characterized but not production tested.

Table 10. Switching Characteristics Over Operating Range

Industrial Temperature Range, T_A = –40°C to 85°C.
C_{LOAD} = 30pF, R_{LOAD} = 500Ω unless otherwise noted.

Symbol	Parameter[1]	Condition	V_{CC} = 3.3 ±0.3V		V_{CC} = 2.7V[2]		Unit
			Min	Max	Min	Max	
t_{PLH} t_{PHL}	Propagation Delay xAx to xYx	C_L = 30pF R_L = 500Ω	1.5	6.5	1.5	8.0	ns
t_{PZH} t_{PZL}	Output Enable Time x$\overline{OE}$ to xYx	C_L = 30pF R_L = 500Ω	1.5	9.5	1.5	11.0	ns
t_{PHZ} t_{PLZ}	Output Disable Time[2] x$\overline{OE}$ to xYx	C_L = 5pF[2] R_L = 500Ω	1.5	8.5	1.5	10.0	ns
		C_L = 30pF R_L = 500Ω	1.5	10.0	1.5	11.5	ns
$t_{SK(O)}$	Output skew		—	0.5	—	—	ns

Notes:
1. Minimum limits guaranteed but not production tested. See test circuit and waveforms.
2. This condition is guaranteed by characterization.
3. Skew between any two outputs of the same package switching in the same direction. This parameter is guaranteed by characterization.

TEST CIRCUIT AND WAVEFORMS

Figure 3. Test Circuit

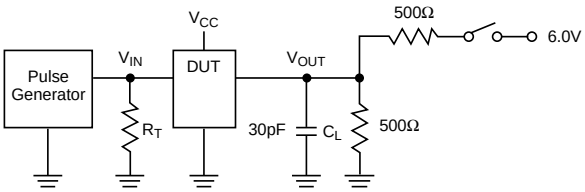

SWITCH POSITION

Test	Switch
Open Drain Disable LOW Enable LOW	6V
Disable HIGH Enable HIGH	GND
All Other Inputs	Open

DEFINITIONS:
C_L = Load capacitance: includes jig and probe capacitance.
R_T = Termination resistance: should be equal to Z_{OUT} of the Pulse Generator.

Figure 4. Setup, Hold, and Release Timing

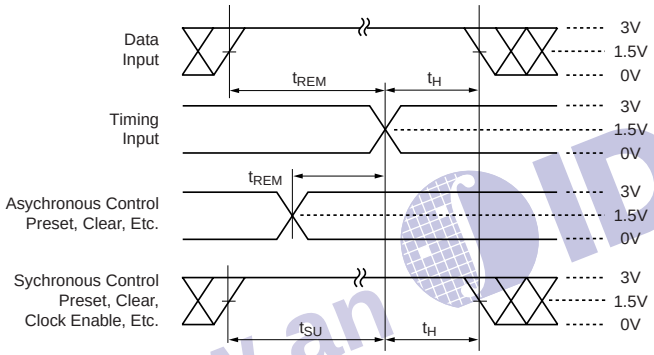

Figure 6. Pulse Width

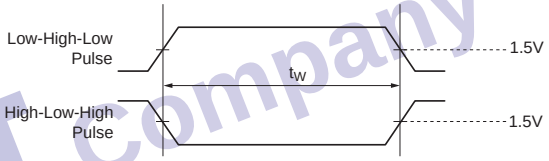

Figure 5. Enable and Disable Timing

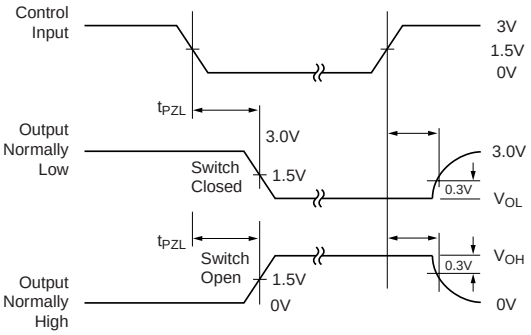

Figure 7. Propagation Delay

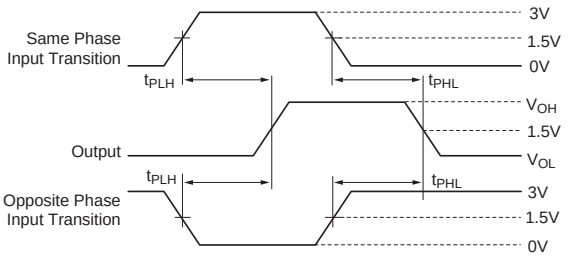

Notes:
1. Input Control Enable = LOW and Input Control Disable = HIGH.
2. Pulse Generator for All Pulses: Rate ≤ 1.0MHz; $Z_{OUT} \leq 50\Omega$; t_F, $t_R \leq 2.5$ns.

ORDERING INFORMATION

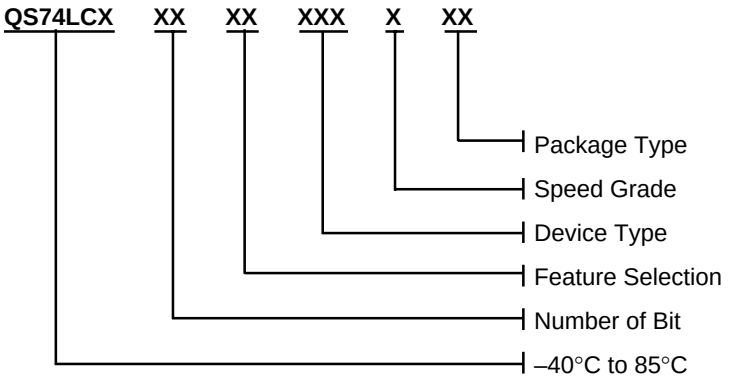

Device Type:
827

Speed Grades:
Blank – Standard

Package Type:
PV – SSOP, 300 mil
PA – TSSOP, 240 mil

Feature Selection:
2 – Output Resistor

Number of Bit:
16 – 20-Bit