2 Pair/1 Pair ETSI Compatible HDSL Analog Front End

AD6472

FEATURES

Integrated Front End for Single Pair or Two Pair HDSL Systems
Meets ETSI Specifications
Supports 1168 Kbps and 2.32 Mbps
Transmit and Receive Signal Path Functions
- **Receive Hybrid Amplifier, PGA and ADC**
- **Transmit DAC, Filter and Differential Outputs**
- **Programmable Filters**

Control and Ancillary Functions
- **Timing Recovery DAC**
- **Normal Loopback and Low Power Modes**
- **Simple Interface-to-Digital Transceivers**

Single 5 V Power Supply
Power Consumption: 320 mW—(Excluding Driver)
Package: 80-Lead MQFP
Operating Temperature: –40°C to +85°C

GENERAL DESCRIPTION

The AD6472 is a single chip analog front end for two pair or single pair HDSL applications that use 1168 Kbps or 2.32 Mbps data rates.

The AD6472 integrates all the transmit and receive functional blocks together with the timing recovery DAC.

The digital interface is designed to support industry standard digital transceivers.

While providing the full analog front end for ETSI standards (two pair or single pair HDSL applications) the AD6472 supports other applications because the architecture allows for bypassing the functional blocks.

The normal, low power, and loopback modes and the digital interface combine to make the AD6472 simple to integrate into systems.

FUNCTIONAL BLOCK DIAGRAM

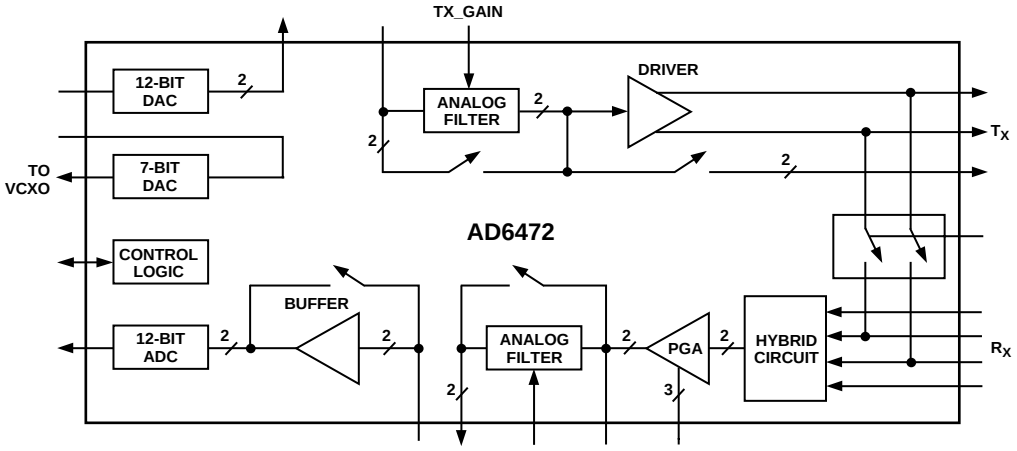

REV. 0

One Technology Way, P.O. Box 9106, Norwood, MA 02062-9106, U.S.A.
Tel: 781/329-4700 World Wide Web Site: http://www.analog.com
Fax: 781/326-8703

AD6472–SPECIFICATIONS ($T_A = T_{MIN}$ to T_{MAX} unless otherwise noted)

Parameter	Min	Typ	Max	Units	Condition
TRANSMIT CHANNEL					
SNR	68	71		dB	The complete transmit path spectrum and pulse
THD	66	71		dB	shape comply with ETSI requirements.
TRANSMIT DAC					The transmit DAC maximum update rate is half
Clock Frequency			18.688	MHz	the maximum output data rate, i.e., 1168 kHz.
Resolution		12		Bits	The maximum transmit clock is 16 × 1168 =
Update Rate			1168	kHz	18.688 MHz.
Output Voltage		2		V p-p Diff	
TRANSMIT FILTER					
Corner Frequency (3 dB)[1]		320		kHz	MODE_SEL1 = 0
		535		kHz	MODE_SEL1 = 1
Accuracy		±5	±10	%	
Gain		9.53		dB	
		3.53		dB	
LINE DRIVER					
VCM		2.5		V	Transformer Turns Ratio = 1:2.3 at 50 kHz
Output Power		13.5		dBm	When Loaded by ETSI (RTR/TM3036)
Output Voltage		6		V p-p Diff	HDSL Test Loops
TRANSMIT VOLTAGE LEVEL		6		V p-p Diff	TX_GAIN = 0
		3		V p-p Diff	TX_GAIN = 1
RECEIVE CHANNEL					
SNR	68	71		dB	
THD	66	71		dB	
HYBRID INTERFACE					V_{CM} = 2.5 V. See Figure 3
Input Voltage Range			5	V p-p Diff	
Input Impedance		10		kΩ	
PROGRAMMABLE GAIN AMPLIFIER					Condition –6 dB to +9 dB
Overall Gain Accuracy		±1		dB	
Gain Step		3		dB	
Gain Step Accuracy		±0.25		dB	
RECEIVE FILTER					
Corner Frequency (–3 dB)[1]		320		kHz	MODE_SEL1 = 0
		640		kHz	MODE_SEL1 = 1
Accuracy		±5	±10	%	
TIMING RECOVERY DAC					
Resolution	7			Bits	Guaranteed Monotonic
Output Low		0.5		V	
Output High		4.5		V	
DIGITAL INTERFACE					5 V Supply, V_{MIN} to V_{MAX}
Input Logic High, V_{IH}	3.3			V	
Input Logic Low, V_{IL}			0.8	V	
Output Logic High, V_{OH}	V_{DD} – 0.3			V	
Output Logic Low, V_{OL}			0.4	V	3.3 V Supply, V_{MIN} to V_{MAX}
Input Logic High, V_{IH}	2.0			V	
Input Logic Low, V_{IL}			0.2	V	
Output Logic High, V_{OH}	V_{DD} – 0.3			V	
POWER SUPPLY VOLTAGE					V_{MIN} to V_{MAX}
	4.75	5	5.25	V	5 V Supply
	3.15	3.3	3.45	V	3.3 V Supply
POWER SUPPLY CURRENT					V_{MIN} to V_{MAX}, T_{MIN} to T_{MAX}
Normal Mode, Excl. Driver		65		mA	5 V Supply, MODE_SEL1 = 0
OVRSAMP Mode		73		mA	5 V Supply, MODE_SEL1 = 1, MODE_SEL0 = 1
Line Driver		50		mA	With 50 Ω Differential Load
Low Power Mode		17		mA	
OPERATING TEMPERATURE RANGE	–40		+85	°C	T_{MIN} to T_{MAX}

NOTES

[1]The ADC clock period t(1÷ f) is used for the dynamic tuning of the Tx and Rx filters.

Specifications subject to change without notice.

ABSOLUTE MAXIMUM RATINGS*

Supply Voltage . . . . . –0.3 V to +6.0 V
Input Voltage . . . . . –0.5 V to V_{DD} + 0.5 V
Output Voltage Swing . . . . . –0.5 V to V_{DD} + 0.5 V
Operating Temperature Range (Ambient) . . . –40°C to +85°C
Storage Temperature Range . . . . . –65°C to +150°C
Lead Temperature (5 sec) MQFP . . . . . +280°C

*Stresses above those listed in this section may cause permanent damage to the device. This is a stress rating only, functional operation of the device at these or any other conditions above those in the operation section of this specification is not implied. Exposure to absolute maximum rating conditions for extended periods may affect device reliability.

Thermal Characteristics

80-Lead Plastic Quad Flatpack Package . . . . . θ_{JA} = 45°C/W

ORDERING GUIDE

Model	Temperature Range	Package Description	Package Option
AD6472BS	–40°C to +85°C	80-Lead Plastic Quad Flatpack	S-80A

PIN CONFIGURATION

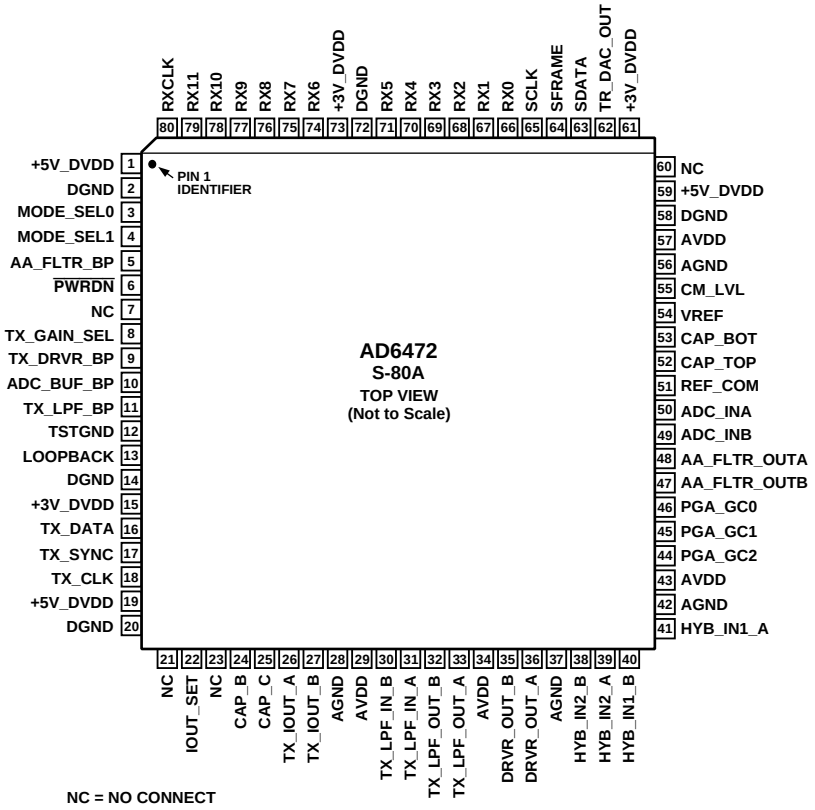

CAUTION

ESD (electrostatic discharge) sensitive device. Electrostatic charges as high as 4000 V readily accumulate on the human body and test equipment and can discharge without detection. Although the AD6472 features proprietary ESD protection circuitry, permanent damage may occur on devices subjected to high energy electrostatic discharges. Therefore, proper ESD precautions are recommended to avoid performance degradation or loss of functionality.

PIN CONFIGURATIONS

Pin	Mnemonic	Description
1	+5 V_DVDD	+5 V Digital Supply.
2	DGND	Digital Ground.
3	MODE_SEL0	Bit Rate—Filter Corner Select.
4	MODE_SEL1	Bit Rate—Filter Corner Select.
5	AA_FLTR_BP	Antialiasing Filter Bypass.
6	$\overline{\text{PWRDN}}$	Power-Down Active Low.
7	NC	No Connect.
8	TX_GAIN_SEL	Transmit Attenuation (6 dB) Select.
9	TX_DRVR_BP	Transmit Driver Bypass.
10	ADC_BUF_BP	ADC Buffer Bypass.
11	TX_LPF_BP	Transmit Filter Bypass.
12	TSTGND	Factory test pin. Connect to DGND.
13	LOOPBACK	Loopback Select.
14	DGND	Digital Ground.
15	+3 V_DVDD	+3.3 V Digital Supply.
16	TX_DATA	Transmit Data Input.
17	TX_SYNC	Transmit Data Frame Sync Input.
18	TX_CLK	Transmit Clock Input.
19	+5 V_DVDD	+5 V Digital Supply.
20	DGND	Digital Ground.
21	NC	No Connect.
22	IOUT_SET	DAC Output Current Full Scale (With Resistor to Ground).
23	NC	No Connect.
24	CAP_B	Decoupling Pin for Internal Node.
25	CAP_C	Decoupling Pin for Internal Node.
26	TX_IOUT_A	TXDAC Complementary Current Output.
27	TX_IOUT_B	TXDAC Complementary Current Output.
28	AGND	Analog Ground.
29	AVDD	+5 V Analog Supply.
30	TX_LPF_IN_B	Differential Input to LPF.
31	TX_LPF_IN_A	Differential Input to LPF.
32	TX_LPF_OUT_B	Differential Output from Transmit (If Driver Bypassed).
33	TX_LPF_OUT_A	Differential Output from Transmit (If Driver Bypassed).
34	AVDD	+5 V Analog Supply.
35	DRVR_OUT_B	Differential Driver Output.
36	DRVR_OUT_A	Differential Driver Output.
37	AGND	Analog Ground.
38	HYB_IN2_B	Hybrid Noninverting Input.
39	HYB_IN2_A	Hybrid Noninverting Input.
40	HYB_IN1_B	Hybrid Inverting Input.

Pin	Mnemonic	Description
41	HYB_IN1_A	Hybrid Inverting Input.
42	AGND	Analog Ground.
43	AVDD	+5 V Analog Supply.
44	PGA_GC2	PGA Gain Select Bits.
45	PGA_GC1	PGA Gain Select Bits.
46	PGA_GC0	PGA Gain Select Bits.
47	AA_FLTR_OUTB	Differential Output of the Antialiasing Filter.
48	AA_FLTR_OUTA	Differential Output of the Antialiasing Filter.
49	ADC_INB	Differential Input to the ADC.
50	ADC_INA	Differential Input to the ADC.
51	REF_COM	Reference Common.
52	CAP_TOP	Decoupling Pin for ADC Reference.
53	CAP_BOT	Decoupling Pin for ADC Reference.
54	VREF	External Voltage Reference.
55	CM_LVL	Common-Mode Level. (1/2 Supply Voltage, Nominally.)
56	AGND	Analog Ground.
57	AVDD	+5 V Analog Supply.
58	DGND	Digital Ground.
59	+5 V_ DVDD	+5 V Digital Supply.
60	NC	No Connect.
61	+3 V_ DVDD	+3 V Digital Supply.
62	TR_DAC_OUT	Timing Recovery DAC Output Voltage.
63	SDATA	Serial Data Input to Timing Recovery DAC.
64	SFRAME	Frame Sync for Timing Recovery.
65	SCLK	Clock for Timing Recovery DAC. Serial Data.
66	RX0	Digital Output Data.
67	RX1	Digital Output Data.
68	RX2	Digital Output Data.
69	RX3	Digital Output Data.
70	RX4	Digital Output Data.
71	RX5	Digital Output Data.
72	DGND	Digital Ground.
73	+3 V_DVDD	+3 V Digital Supply.
74	RX6	Digital Output Data.
75	RX7	Digital Output Data.
76	RX8	Digital Output Data.
77	RX9	Digital Output Data.
78	RX10	Digital Output Data.
79	RX11	Digital Output Data.
80	RXCLK	Clock Input for ADC Data.

Circuit Description

The AD6472 is an HDSL analog front end for either 2-pair or single pair applications.

Transmit Channel

The AD6472 receives, from a DSP transceiver core, a serial 2s complement data stream. The data are 16-bit words and the MSB is received first.

The 12-bit DAC converts the digital data to an analog signal. Although HDSL uses four level 2B1Q modulation, the 12-bit DAC is necessary because of the linearity requirements of the echo canceling circuit.

The active filters have dynamic tuning and selectable filter corners that meet transmit mask requirements for both two-pair and single pair applications. A 6 dB attenuation option is included as part of the filter to increase the driver output dynamic range. Bypassing the active filter means giving up the 6 dB option, and reduces the maximum TX output voltage to 2 V p-p diff.

The filtered transmit signal is then processed by the driver amplifier. The DAC output controls the driver output level. The designer can choose to bypass the driver amplifier; in this case the driver amplifier will be powered down, and the TX output will be at the TX_LPF_OUT pins.

The AD6472 meets the requirements of the ETSI masks (both frequency and time domains for pulse shape). This includes the worst case in RTR/TM 3036.

Table I. Transmit Spectra

Rate Kbps	Application	Nyquist Frequency kHz	Time Interval T (μs)
1168	2-Pair E1	292	1710
2320	Single Pair E1	580	862

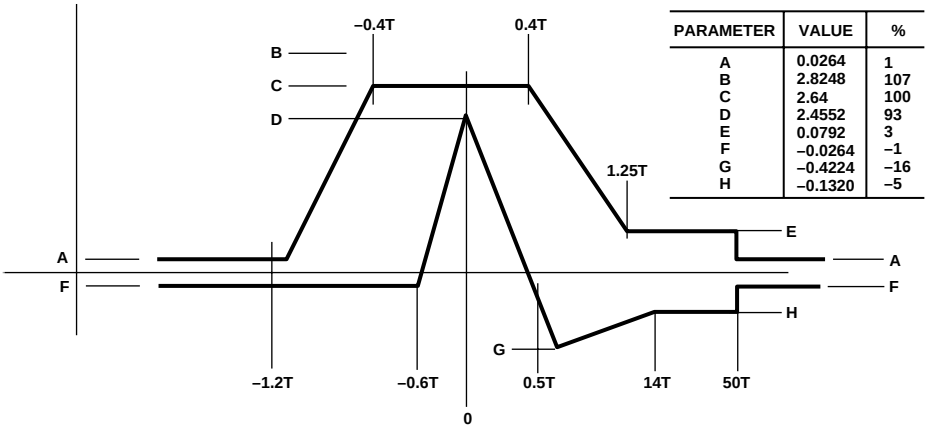

PARAMETER	VALUE	%
A	0.0264	1
B	2.8248	107
C	2.64	100
D	2.4552	93
E	0.0792	3
F	–0.0264	–1
G	–0.4224	–16
H	–0.1320	–5

Figure 1. 2-pair Transmit Pulse Shape Mask Normalized

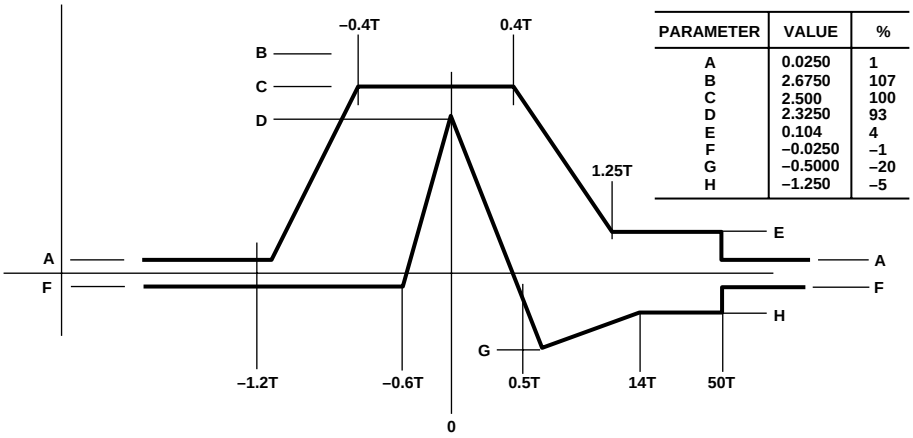

PARAMETER	VALUE	%
A	0.0250	1
B	2.6750	107
C	2.500	100
D	2.3250	93
E	0.104	4
F	–0.0250	–1
G	–0.5000	–20
H	–1.250	–5

Figure 2. Single Pair Transmit Pulse Shape Mask Normalized

Receive Channel

Hybrid Amplifier

The hybrid amplifier performs balanced to unbalanced conversion.

Programmable Gain Amplifier (PGA)

The PGA can be programmed to amplify the receive signal from between –6 dB and 9 dB. Refer to Table II for PGA gain control information.

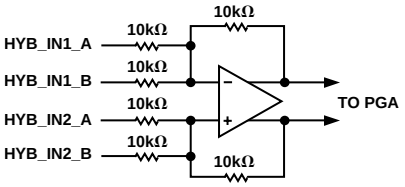

Figure 3.

Transmit and Receive Filters

Refer to Table III for transmit and receive channels filter control information. The receive channel filters meet ETSI requirements.

Analog-to-Digital Converter (ADC)

The receive channel ADC has a pipeline architecture with 12-bit resolution. The ADC can be clocked at 2320 kHz, maximum. Output data is provided in 2s complement form.

Timing Recovery D/A

The AD6472 has an integrated D/A converter to control an external VCXO used for timing recovery. The D/A is 7 bits and monotonic. The D/A accepts 7 bits inverted format input data serially with the MSB first.

Configuration Control

Table IV presents control information that you use to configure the AD6472.

Table II.

Gain Control Bit			Binary Count GAIN (dB)
PGA_GC2	PGA_GC1	PGA_GC0	
0	0	0	–6
0	0	1	–3
0	1	0	0
0	1	1	3
1	0	0	6
1	0	1	9
1	1	0	9
1	1	1	9

Table III.

Receive Channel MODE_SEL1	Filter Control Bit MODE_SEL0	Receive Clock Frequency (kHz)	3 dB Frequency (kHz)
0	0	1168/2	Rx = 320/Tx = 320
0	1	Reserved	Reserved
1	0	1160	Rx = 640/Tx = 535
1	1	1160 × 2	Rx = 640/Tx = 535

Table IV. Configuration Control

Pin	Mnemonic	Logic 0 = Function	Logic 1 = Function
5	AA_FLTR_BP	Receive Filter in Circuit	Receive Filter Bypassed
6	$\overline{\text{PWRDN}}$	Low Power Selected	Normal Operating Mode
7	ADC_BUF_BP	ADC Buffer in Circuit	ADC Buffer Bypassed
8	TX_GAIN_SEL	0 dB Attenuation	6 dB Attenuation
9	TX_DRVR_BP	Line Driver in Circuit	Line Driver Bypassed
11	TX_LPF_BP	Transmit Filter in Circuit	Transmit Circuit Bypassed
13	LOOPBACK	Normal Operation	Analog Loopback Selected

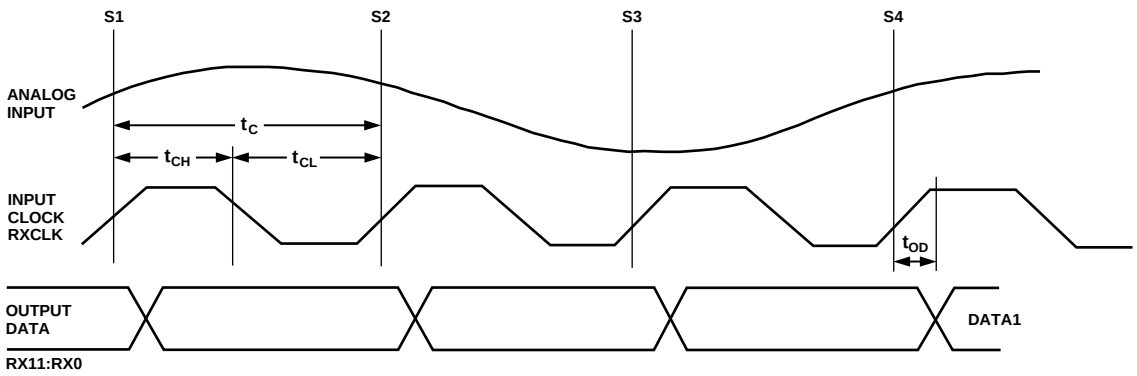

Figure 4. Receive Interface Timing Diagram

Receive Interface Timing

The analog input is sampled at the rising edge of the RXCLK. The digital data, RX11:RX0, is valid on each falling edge of RXCLK. Figure 4 shows a three-cycle latency on the receive data.

Table V through Table VII lists the RXCLK clock switching specifications for various RXCLK conditions. See Table IV, Configuration Control.

Table V. 40% to 60% Duty Cycle when the RXCLK = 1168 ÷ 2 kHz

Symbol	Parameter	Min	Typ	Max	Units
t_C	Clock Period		1712		ns
t_{CH}	Clock Pulsewidth High	685		1027	ns
t_{CL}	Clock Pulsewidth Low	1027		685	ns
t_{OD}	Output Delay	8	13	19	ns
Latency	Pipeline Delay	3	3	3	Cycles

Table VI. 40% to 60% Duty Cycle RXCLK Clock when the RXCLK = 1160 kHz

Symbol	Parameter	Min	Typ	Max	Units
t_C	Clock Period		862		ns
t_{CH}	Clock Pulsewidth High	342		514	ns
t_{CL}	Clock Pulsewidth Low	514		342	ns
t_{OD}	Output Delay	8	13	19	ns
Latency	Pipeline Delay	3	3	3	Cycles

Table VII. 40% to 60% Duty Cycle RXCLK when the RXCLK = 1160 × 2 kHz

Symbol	Parameter	Min	Typ	Max	Units
t_C	Clock Period		431		ns
t_{CH}	Clock Pulsewidth High	171		257	ns
t_{CL}	Clock Pulsewidth Low	257		171	ns
t_{OD}	Output Delay	8	13	19	ns
Latency	Pipeline Delay	3	3	3	Cycles

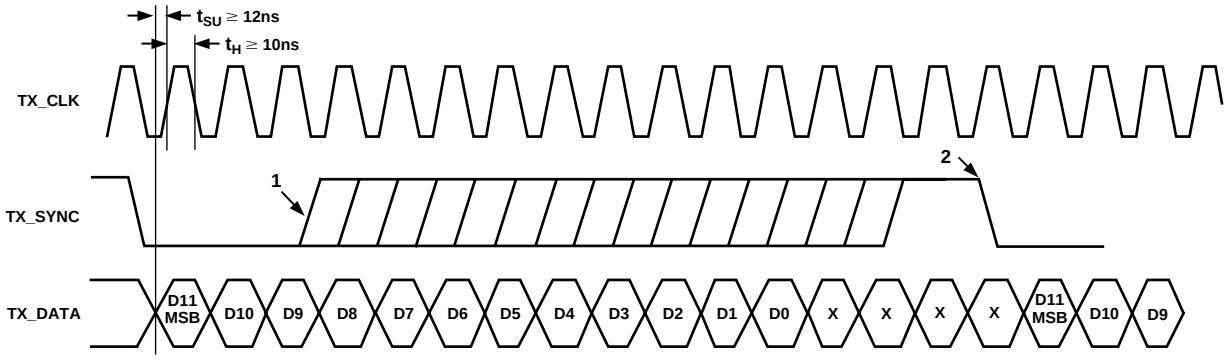

1. THE RISING EDGE TO TX_SYNC CAN OCCUR ANYWHERE. TX_SYNC MUST BE AT LEAST ONE CLOCK CYCLE WIDE.
2. TX_SYNC FALLING EDGE MUST OCCUR AFTER THE TX_CLK RISING EDGE THAT CAPTURED THE SERIAL LSB. THIS ENSURES CORRECT LOADING INTO THE DAC.

THE FIRST 12 BITS OF THE 16-BIT SERIAL WORD ARE THE INPUT TO THE TX PATH DAC, MSB FIRST. THE NUMBER SYSTEM IS TWOS COMPLEMENT, AS FOLLOWS:

OUTPUT	WORD
FULL SCALE	011111111111
1/2 FULL SCALE	000000000000
1/2 FULL SCALE MINUS 1LSB	111111111111
ZERO	100000000000

Figure 5. Transmit Interface Timing Diagram

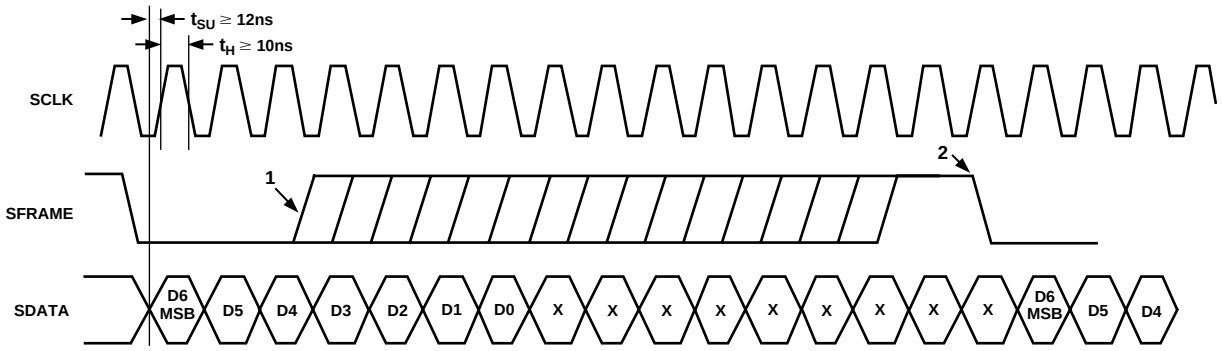

1. THE RISING EDGE OF SFRAME CAN OCCUR ANYWHERE. SFRAME MUST BE AT LEAST ONE CLOCK CYCLE WIDE.
2. SFRAME FALLING EDGE MUST OCCUR BEFORE THE SCLK RISING EDGE THAT CAPTURED THE SERIAL LSB. THIS ENSURES CORRECT LOADING INTO THE DAC.

THE FIRST 7 BITS OF THE 16-BIT SERIAL WORD ARE THE INPUT TO THE TR DAC, MSB FIRST. THE NUMBER SYSTEM IS TWOS COMPLEMENT, AS FOLLOWS:

OUTPUT	WORD	VOLTAGE
FULL SCALE	1111111	4.5
MID-SCALE	1000000	2.5
MINIMUM	0000000	0.5

Figure 6. Timing Recovery DAC Converter Timing

PCB Layout Recommendations

Analog and Digital Ground Planes	Separate the analog and digital grounds. Use a single 35 to 50 mil wide trace under the device to connect the two ground planes. Connect the IC ground pins directly to the respective ground planes.
Power Supply Capacitors	Use one 0.1 µF capacitor for each IC decoupling power supply connection in addition to capacitance shown in schematic.

OUTLINE DIMENSIONS

Dimensions shown in inches and (mm).

80-Lead Metric Plastic Quad Flatpack
S-80A

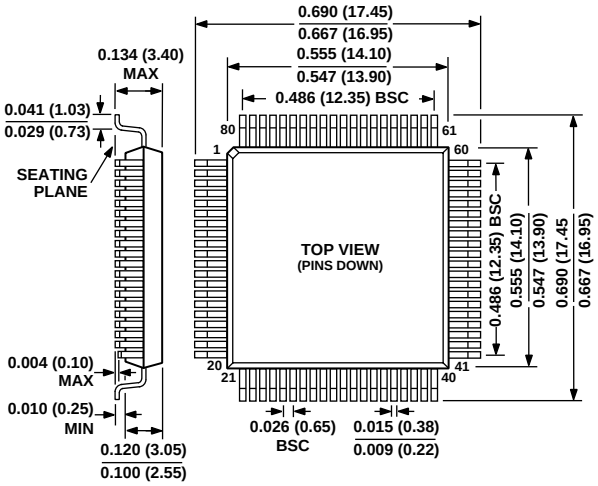

C3302–8–4/98

PRINTED IN U.S.A.