ST62T18C/E18C

8-BIT MCUs WITH A/D CONVERTER, AUTO-RELOAD TIMER, UART, OSG, SAFE RESET AND 20-PIN PACKAGE

- 3.0 to 6.0V Supply Operating Range
- 8 MHz Maximum Clock Frequency
- -40 to +125°C Operating Temperature Range
- Run, Wait and Stop Modes
- 5 Interrupt Vectors
- Look-up Table capability in Program Memory
- Data Storage in Program Memory: User selectable size
- Data RAM: 192 bytes
- User Programmable Options
- 12 I/O pins, fully programmable as:
  - Input with pull-up resistor
  - Input without pull-up resistor
  - Input with interrupt generation
  - Open-drain or push-pull output
  - Analog Input
- 5 I/O lines can sink up to 20mA to drive LEDs or TRIACs directly
- 8-bit Timer/Counter with 7-bit programmable prescaler
- 8-bit Auto-reload Timer with 7-bit programmable prescaler (AR Timer)
- Digital Watchdog
- 8-bit A/D Converter with 7 analog inputs
- 8-bit Asynchronous Peripheral Interface (UART)
- On-chip Clock oscillator can be driven by Quartz Crystal or Ceramic resonator
- Oscillator Safe Guard
- Low Voltage Detector for safe Reset
- One external Non-Maskable Interrupt
- ST623x-EMU2 Emulation and Development System (connects to an MS-DOS PC via a parallel port).

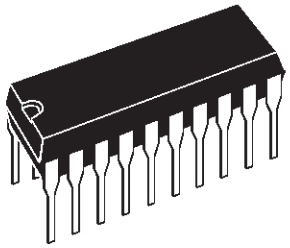

PDIP20

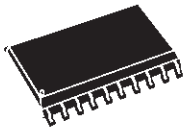

PSO20

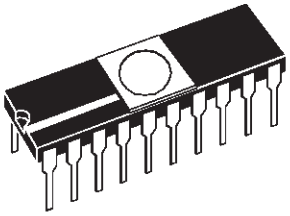

CDIP20W

(See end of Datasheet for Ordering Information)

DEVICE SUMMARY

DEVICE	OTP (Bytes)	EPROM (Bytes)	I/O Pins
ST62T18C	7948	-	12
ST62E18C		7948	12

Rev. 2.6

Table of Contents

Table of Contents

Table of Contents

1 GENERAL DESCRIPTION

1.1 INTRODUCTION

The ST62T18C and ST62E18C devices are low cost members of the ST62xx 8-bit HCMOS family of microcontrollers, which are targeted at low to medium complexity applications. All ST62xx devices are based on a building block approach: a common core is surrounded by a number of on-chip peripherals.

The ST62E18C is the erasable EPROM version of the ST62T18C device, which may be used to emulate the ST62T18C device, as well as the respective ST6218C ROM devices.

Figure 1. Block Diagram

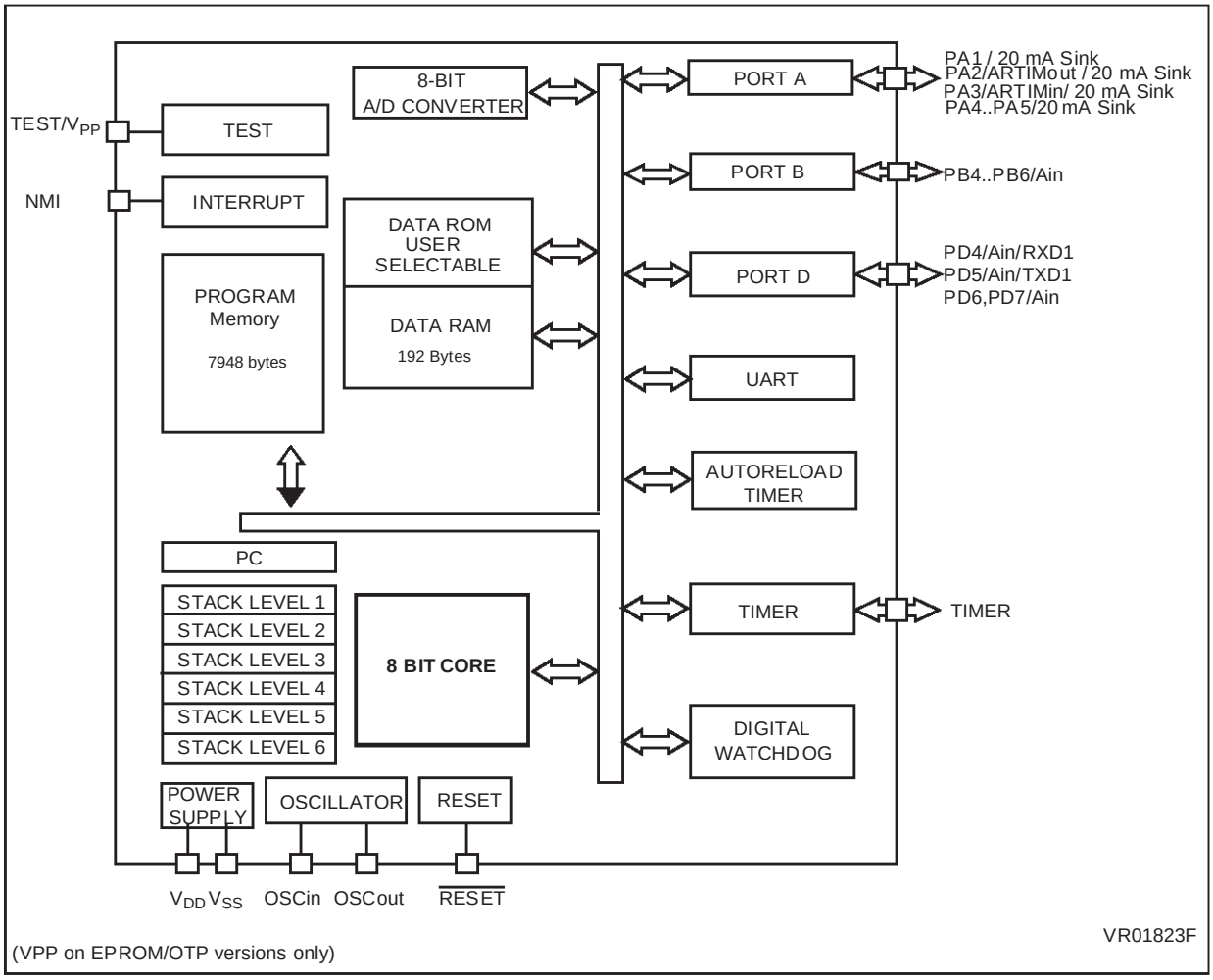

INTRODUCTION (Cont'd)

OTP and EPROM devices are functionally identical. The ROM based versions offer the same functionality selecting as ROM options the options defined in the programmable option byte of the OTP/EPROM versions.OTP devices offer all the advantages of user programmability at low cost, which make them the ideal choice in a wide range of applications where frequent code changes, multiple code versions or last minute programmability are required.

Figure 2. ST62T18C/E18C Pin Configuration

These compact low-cost devices feature a Timer

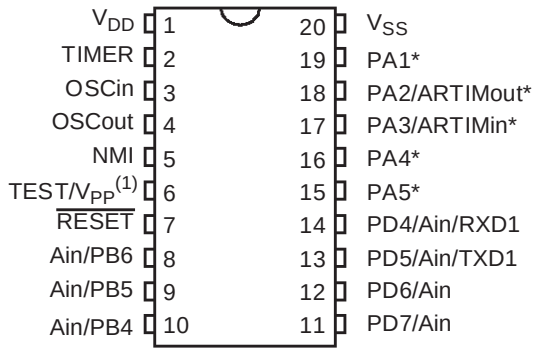

(1) V_{PP} on EPROM/OTP only
(*) 20 mA Sink

1.2 PIN DESCRIPTIONS

V_{DD} and V_{SS}. Power is supplied to the MCU via these two pins. V_{DD} is the power connection and V_{SS} is the ground connection.

OSCin and OSCout. These pins are internally connected to the on-chip oscillator circuit. A quartz crystal, a ceramic resonator or an external clock signal can be connected between these two pins. The OSCin pin is the input pin, the OSCout pin is the output pin.

$\overline{\text{RESET}}$. The active-low $\overline{\text{RESET}}$ pin is used to restart the microcontroller.

TEST/V_{PP}. The TEST must be held at V_{SS} for normal operation. If TEST pin is connected to a +12.5V level during the reset phase, the EPROM/OTP programming Mode is entered.

NMI. The NMI pin provides the capability for asynchronous interruption, by applying an external non maskable interrupt to the MCU. Schmitt trigger characteristics. The user can select as option the availability of an on-chip pull-up at this pin.

PA1-PA5. These 5 lines are organised as one I/O port (A). Each line may be configured under software control as inputs with or without internal pull-up resistors, input with interrupt generation and pull-up resistor, open-drain or push-pull outputs. PA3/ARTIMout and PA4/ARTIMin can be used respectively as output and input pins for the embedded 8-bit Auto-Reload Timer.

In addition, PA1-PA5 can sink 20mA for direct LED or TRIAC drive.

PB4...PB6. These 3 lines are organised as one I/O port (B). Each line may be configured under software control as inputs with or without internal pull-up resistors, input with interrupt generation and pull-up resistor, open-drain or push-pull outputs, analog inputs for the A/D converter.

PD4...PD7. These 4 lines are organised as one I/O port (portD). Each line may be configured under software control as input with or without internal pull-up resistor, input with interrupt generation and pull-up resistor, analog input open-drain or push-pull output. In addition, the pins PD5/TXD1 and PD4/RXD1 can be used as UART output (PD5/TXD1) or UART input (PD4/RXD1).

TIMER. This is the TIMER 1 I/O pin. In input mode, it is connected to the prescaler and acts as external timer clock or as control gate for the internal timer clock. In output mode, the TIMER pin outputs the data bit when a time-out occurs.The user can select as option the availability of an on-chip pull-up at this pin.

1.3 MEMORY MAP

1.3.1 Introduction

The MCU operates in three separate memory spaces: Program space, Data space, and Stack space. Operation in these three memory spaces is described in the following paragraphs.

Briefly, Program space contains user program code in Program memory and user vectors; Data space contains user data in RAM and in Program memory, and Stack space accommodates six levels of stack for subroutine and interrupt service routine nesting.

1.3.2 Program Space

Program Space comprises the instructions to be executed, the data required for immediate addressing mode instructions, the reserved factory test area and the user vectors. Program Space is addressed via the 12-bit Program Counter register (PC register).

Program Space is organised in 4K pages. 4 of them are addressed in the 000h-7FFh locations of the Program Space by the Program Counter and by writing the appropriate code in the Program ROM Page Register (PRPR register). A common (STATIC) 2K page is available all the time for interrupt vectors and common subroutines, independently of the PRPR register content. This “STATIC” page is directly addressed in the 0800h-0FFFh by the MSB of the Program Counter register PC 11. Note this page can also be addressed in the 000-7FFh range. It is two different ways of addressing the same physical memory.

Jump from a dynamic page to another dynamic page is achieved by jumping back to the static page, changing contents of PRPR and then jumping to the new dynamic page.

Figure 3. 8Kbytes Program Space Addressing

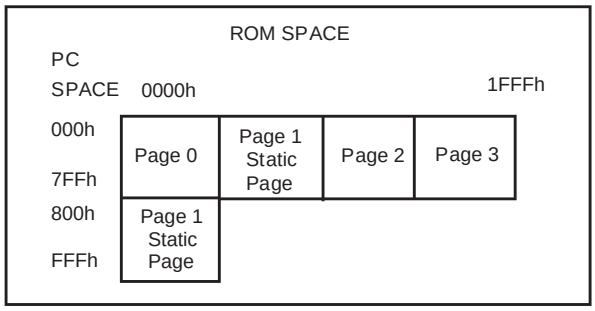

Figure 4. Memory Addressing Diagram

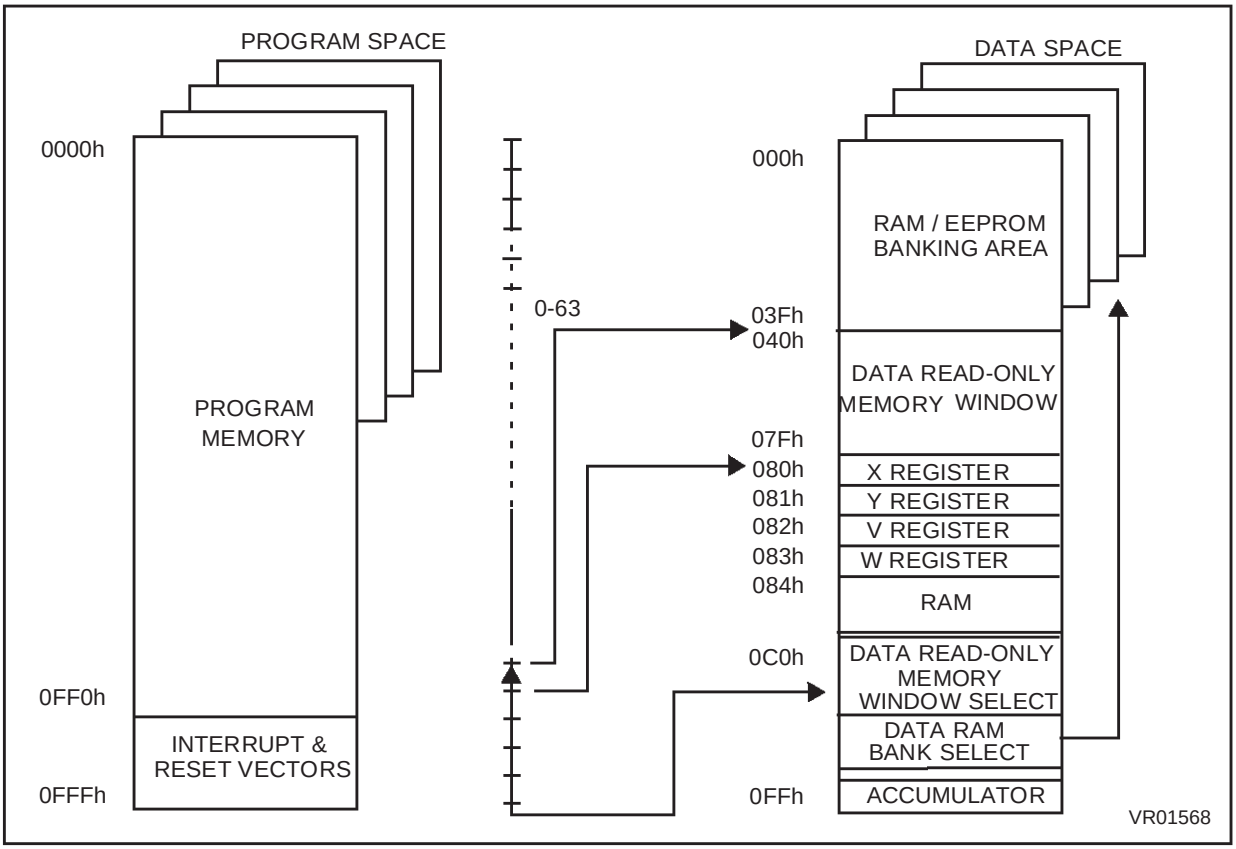

MEMORY MAP (Cont'd)

Table 1. ST62E18C/T18C Program Memory Map

ROM Page	Device Address	Description
Page 0	0000h-007Fh 0080h-07FFh	Reserved User ROM
Page 1 "STATIC"	0800h-0F9Fh 0FA0h-0FEFh 0FF0h-0FF7h 0FF8h-0FFBh 0FFCh-0FFDh 0FFEh-0FFFh	User ROM Reserved Interrupt Vectors Reserved NMI Vector Reset Vector
Page 2	0000h-000Fh 0010h-07FFh	Reserved User ROM
Page 3	0000h-000Fh 0010h-07FFh	Reserved User ROM

Note: OTP/EPROM devices can be programmed with the development tools available from STMicroelectronics (ST62E2XC-EPB or ST622XC-KIT).

1.3.2.1 Program ROM Page Register (PRPR)

The PRPR register can be addressed like a RAM location in the Data Space at the address CAh; nevertheless it is a write only register that cannot be accessed with single-bit operations. This register is used to select the 2-Kbyte ROM bank of the Program Space that will be addressed. The number of the page has to be loaded in the PRPR register. Refer to the Program Space description for additional information concerning the use of this register. The PRPR register is not modified when an interrupt or a subroutine occurs.

Care is required when handling the PRPR register as it is write only. For this reason, it is not allowed to change the PRPR contents while executing interrupt service routine, as the service routine cannot save and then restore its previous content. This operation may be necessary if common routines and interrupt service routines take more than 2K bytes; in this case it could be necessary to divide the interrupt service routine into a (minor) part in the static page (start and end) and to a second (major) part in one of the dynamic pages. If it is impossible to avoid the writing of this register in interrupt service routines, an image of this register must be saved in a RAM location, and each time the program writes to the PRPR it must write also to the image register. The image register must be written before PRPR, so if an interrupt occurs between the two instructions the PRPR is not affected.

Program ROM Page Register (PRPR)

Address: CAh — Write Only

7							0
-	-	-	-	-	-	PRPR1	PRPR0

Bits 2-7= Not used.

Bit 5-0 = **PRPR1-PRPR0:** *Program ROM Select.* These two bits select the corresponding page to be addressed in the lower part of the 4K program address space as specified in Table 2.

This register is undefined on Reset. Neither read nor single bit instructions may be used to address this register.

Table 2. 6Kbytes Program ROM Page Register Coding

PRPR1	PRPR0	PC bit 11	Memory Page
X	X	1	Static Page (Page 1)
0	0	0	Page 0
0	1	0	Page 1 (Static Page)
1	0	0	Page 2
1	1	0	Page 3

1.3.2.2 Program Memory Protection

The Program Memory in OTP or EPROM devices can be protected against external readout of memory by selecting the READOUT PROTECTION option in the option byte.

In the EPROM parts, READOUT PROTECTION option can be disactivated only by U.V. erasure that also results into the whole EPROM context erasure.

Note: Once the Readout Protection is activated, it is no longer possible, even for STMicroelectronics, to gain access to the Program memory contents. Returned parts with a protection set can therefore not be accepted.

MEMORY MAP (Cont'd)

1.3.3 Data Space

Data Space accommodates all the data necessary for processing the user program. This space comprises the RAM resource, the processor core and peripheral registers, as well as read-only data such as constants and look-up tables in Program memory.

1.3.3.1 Data ROM

All read-only data is physically stored in program memory, which also accommodates the Program Space. The program memory consequently contains the program code to be executed, as well as the constants and look-up tables required by the application.

The Data Space locations in which the different constants and look-up tables are addressed by the processor core may be thought of as a 64-byte window through which it is possible to access the read-only data stored in Program memory.

1.3.3.2 Data RAM

In ST62T18C and ST62E18C devices, the data space includes 60 bytes of RAM, the accumulator (A), the indirect registers (X), (Y), the short direct registers (V), (W), the I/O port registers, the peripheral data and control registers, the interrupt option register and the Data ROM Window register (DRW register).

Additional RAM pages can also be addressed using banks of 64 bytes located between addresses 00h and 3Fh.

1.3.4 Stack Space

Stack space consists of six 12-bit registers which are used to stack subroutine and interrupt return addresses, as well as the current program counter contents.

Table 3. Additional RAM Banks

Device	RAM
ST62T18C/E18C	2 x 64 bytes

Table 4. ST62T18C/E18C Data Memory Space

DATA RAM BANKS	000h 03Fh
DATA ROM WINDOW AREA	040h 07Fh
X REGISTER	080h
Y REGISTER	081h
V REGISTER	082h
W REGISTER	083h
DATA RAM	084h 0BFh
PORT A DATA REGISTER	0C0h
PORT B DATA REGISTER	0C1h
RESERVED	0C2h
PORT D DATA REGISTER	0C3h
PORT A DIRECTION REGISTER	0C4h
PORT B DIRECTION REGISTER	0C5h
RESERVED	0C6h
PORT D DIRECTION REGISTER	0C7h
INTERRUPT OPTION REGISTER	0C8h*
DATA ROM WINDOW REGISTER	0C9h*
ROM BANK SELECT REGISTER	0CAh*
RAM BANK SELECT REGISTER	0CBh*
PORT A OPTION REGISTER	0CCh
PORT B OPTION REGISTER	0CDh
RESERVED	0CEh
PORT D OPTION REGISTER	0CFh
A/D DATA REGISTER	0D0h
A/D CONTROL REGISTER	0D1h
TIMER 1 PRESCALER REGISTER	0D2h
TIMER 1 COUNTER REGISTER	0D3h
TIMER 1 STATUS/CONTROL REGISTER	0D4h
RESERVED	0D5h
UART DATA SHIFT REGISTER	0D6h
UART STATUS CONTROL REGISTER	0D7h
WATCHDOG REGISTER	0D8h
RESERVED	0D9h
I/O INTERRUPT POLARITY REGISTER	0DAh
RESERVED	0DCh*
RESERVED	0DDh
RESERVED	0DEh 0E4h
ARTIMER MODE/CONTROL REGISTER	0E5h
ARTIMER STATUS/CONTROL REGISTER ARSC0	0E6h
ARTIMER STATUS/CONTROL REGISTER ARSC1	0E7h
RESERVED	0E8h
ARTIMER RELOAD/CAPTURE REGISTER	0E9h
ARTIMER COMPARE REGISTER	0EAh
. ARTIMER LOAD REGISTER	0EBh
RESERVED	0ECh
ACCUMULATOR	OFFh

* WRITE ONLY REGISTER

MEMORY MAP (Cont'd)

1.3.5 Data Window Register (DWR)

The Data read-only memory window is located from address 0040h to address 007Fh in Data space. It allows direct reading of 64 consecutive bytes located anywhere in program memory, between address 0000h and 1FFFh (top memory address depends on the specific device). All the program memory can therefore be used to store either instructions or read-only data. Indeed, the window can be moved in steps of 64 bytes along the program memory by writing the appropriate code in the Data Window Register (DWR).

The DWR can be addressed like any RAM location in the Data Space, it is however a write-only register and therefore cannot be accessed using single-bit operations. This register is used to position the 64-byte read-only data window (from address 40h to address 7Fh of the Data space) in program memory in 64-byte steps. The effective address of the byte to be read as data in program memory is obtained by concatenating the 6 least significant bits of the register address given in the instruction (as least significant bits) and the content of the DWR register (as most significant bits), as illustrated in Figure 5 below. For instance, when addressing location 0040h of the Data Space, with 00h loaded in the DWR register, the physical location addressed in program memory is 00h. The DWR register is not cleared on reset, therefore it must be written to prior to the first access to the Data read-only memory window area.

Data Window Register (DWR)

Address: 0C9h — Write Only

7							0
-	DWR6	DWR5	DWR4	DWR3	DWR2	DWR1	DWR0

Bits 7 = Not used.

Bit 6-0 = **DWR6-DWR0:** *Data read-only memory Window Register Bits.* These are the Data read-only memory Window bits that correspond to the upper bits of the data read-only memory space.

Caution: *This register is undefined on reset. Neither read nor single bit instructions may be used to address this register.*

Note: Care is required when handling the DWR register as it is write only. For this reason, the DWR contents should not be changed while executing an interrupt service routine, as the service routine cannot save and then restore the register's previous contents. If it is impossible to avoid writing to the DWR during the interrupt service routine, an image of the register must be saved in a RAM location, and each time the program writes to the DWR, it must also write to the image register. The image register must be written first so that, if an interrupt occurs between the two instructions, the DWR is not affected.

Figure 5. Data read-only memory Window Memory Addressing

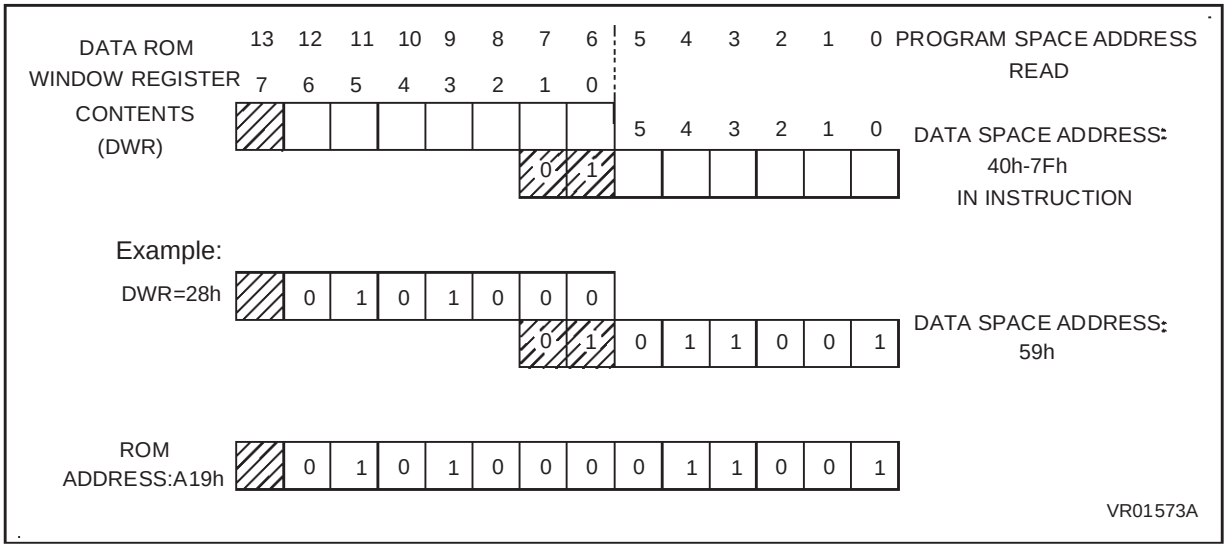

MEMORY MAP (Cont'd)

1.3.6 Data RAM Bank Register (DRBR)

Address: CBh — Write only

7							0
-	-	-	DRBR4	DRBR3	-	-	-

Bit 7-5 = These bits are not used

Bit 4 - **DRBR4**. This bit, when set, selects RAM Page 2.

Bit 3 - **DRBR3**. This bit, when set, selects RAM Page 1.

Bit 2.0 These bits are not used.

The selection of the bank is made by programming the Data RAM Bank Switch register (DRBR register) located at address CBh of the Data Space according to Table 1. No more than one bank should be set at a time.

The DRBR register can be addressed like a RAM Data Space location at the address CBh; nevertheless it is a write only register that cannot be accessed with single-bit operations. This register is used to select the desired 64-byte RAM bank of the Data Space. The number of banks has to be loaded in the DRBR register and the instruction has to point to the selected location as if it was in bank 0 (from 00h address to 3Fh address).

This register is not cleared during the MCU initialization, therefore it must be written before the first access to the Data Space bank region. Refer to the Data Space description for additional information. The DRBR register is not modified when an interrupt or a subroutine occurs.

Notes:

Care is required when handling the DRBR register as it is write only. For this reason, it is not allowed to change the DRBR contents while executing interrupt service routine, as the service routine cannot save and then restore its previous content. If it is impossible to avoid the writing of this register in interrupt service routine, an image of this register must be saved in a RAM location, and each time the program writes to DRBR it must write also to the image register. The image register must be written first, so if an interrupt occurs between the two instructions the DRBR is not affected.

In DRBR Register, only 1 bit must be set. Otherwise two or more pages are enabled in parallel, producing errors.

Table 5. Data RAM Bank Register Set-up

DRBR	ST62T18C/E18C
00h	None
01h	Reserved
02h	Reserved
08h	RAM Page 1
10h	RAM Page 2
other	Reserved

1.4 PROGRAMMING MODES

1.4.1 Option Bytes

The two Option Bytes allow configuration capability to the MCUs. Option byte's content is automatically read, and the selected options enabled, when the chip reset is activated.

It can only be accessed during the programming mode. This access is made either automatically (copy from a master device) or by selecting the OPTION BYTE PROGRAMMING mode of the programmer.

The option bytes are located in a non-user map. No address has to be specified.

EPROM Code Option Byte (LSB)

7							0
PRO-TECT	OSCIL	PORT PULL	-	NMI PULL	TIM PULL	WDACT	OS-GEN

EPROM Code Option Byte (MSB)

15							8
-	-	-	ADC SYNCHRO	UART FRAME	-	EXTC-NTL	LVD

D15-D13. Reserved. Must be cleared.

ADC SYNCHRO. When set, an A/D conversion is started upon WAIT instruction execution, in order to reduce supply noise. When this bit is low, an A/D conversion is started as soon as the STA bit of the A/D Converter Control Register is set.

UART FRAME. When set, UART transmission and reception are based on a 11-bit frame. When cleared, a 10-bit frame is used.

D10. Reserved. This bit must be cleared

EXTCNTL. *External STOP MODE control.*. When EXTCNTL is high, STOP mode is available with watchdog active by setting NMI pin to one. When EXTCNTL is low, STOP mode is not available with the watchdog active.

LVD. *LVD RESET enable.*When this bit is set, safe RESET is performed by MCU when the supply voltage is too low. When this bit is cleared, only power-on reset or external RESET are active.

PROTECT. *Readout Protection.* This bit allows the protection of the software contents against piracy. When the bit PROTECT is set high, readout of the OTP contents is prevented by hardware.. When this bit is low, the user program can be read.

OSCIL. *Oscillator selection*. When this bit is low, the oscillator must be controlled by a quartz crystal, a ceramic resonator or an external frequency. When it is high, the oscillator must be controlled by an RC network, with only the resistor having to be externally provided.

PORT PULL. *Port Pull-Up.* This bit must be set high to have pull-up input state at reset on the I/O port. When this bit is low, I/O ports are in input without pull-up (high impedance state at reset).

D4. Reserved. Must be set to 1.

NMI PULL. *NMI Pull-Up*. This bit must be set high to configure the NMI pin with a pull-up resistor. When it is low, no pull-up is provided**.**

TIM PULL.*TIM Pull-Up*. This bit must be set high to configure the TIMER pin with a pull-up resistor. When it is low, no pull-up is provided**.**

WDACT. This bit controls the watchdog activation. When it is high, hardware activation is selected. The software activation is selected when WDACT is low.

OSGEN. *Oscillator Safe Guard*. This bit must be set high to enable the Oscillator Safe Guard. When this bit is low, the OSG is disabled.

The Option byte is written during programming either by using the PC menu (PC driven Mode) or automatically (stand-alone mode).

2 CENTRAL PROCESSING UNIT

2.1 INTRODUCTION

The CPU Core of ST6 devices is independent of the I/O or Memory configuration. As such, it may be thought of as an independent central processor communicating with on-chip I/O, Memory and Peripherals via internal address, data, and control buses. In-core communication is arranged as shown in Figure 6; the controller being externally linked to both the Reset and Oscillator circuits, while the core is linked to the dedicated on-chip peripherals via the serial data bus and indirectly, for interrupt purposes, through the control registers.

2.2 CPU REGISTERS

The ST6 Family CPU core features six registers and three pairs of flags available to the programmer. These are described in the following paragraphs.

Accumulator (A). The accumulator is an 8-bit general purpose register used in all arithmetic calculations, logical operations, and data manipulations. The accumulator can be addressed in Data space as a RAM location at address FFh. Thus the ST6 can manipulate the accumulator just like any other register in Data space.

Indirect Registers (X, Y). These two indirect registers are used as pointers to memory locations in Data space. They are used in the register-indirect addressing mode. These registers can be addressed in the data space as RAM locations at addresses 80h (X) and 81h (Y). They can also be accessed with the direct, short direct, or bit direct addressing modes. Accordingly, the ST6 instruction set can use the indirect registers as any other register of the data space.

Short Direct Registers (V, W). These two registers are used to save a byte in short direct addressing mode. They can be addressed in Data space as RAM locations at addresses 82h (V) and 83h (W). They can also be accessed using the direct and bit direct addressing modes. Thus, the ST6 instruction set can use the short direct registers as any other register of the data space.

Program Counter (PC). The program counter is a 12-bit register which contains the address of the next ROM location to be processed by the core. This ROM location may be an opcode, an operand, or the address of an operand. The 12-bit length allows the direct addressing of 4096 bytes in Program space.

Figure 6. ST6 Core Block Diagram

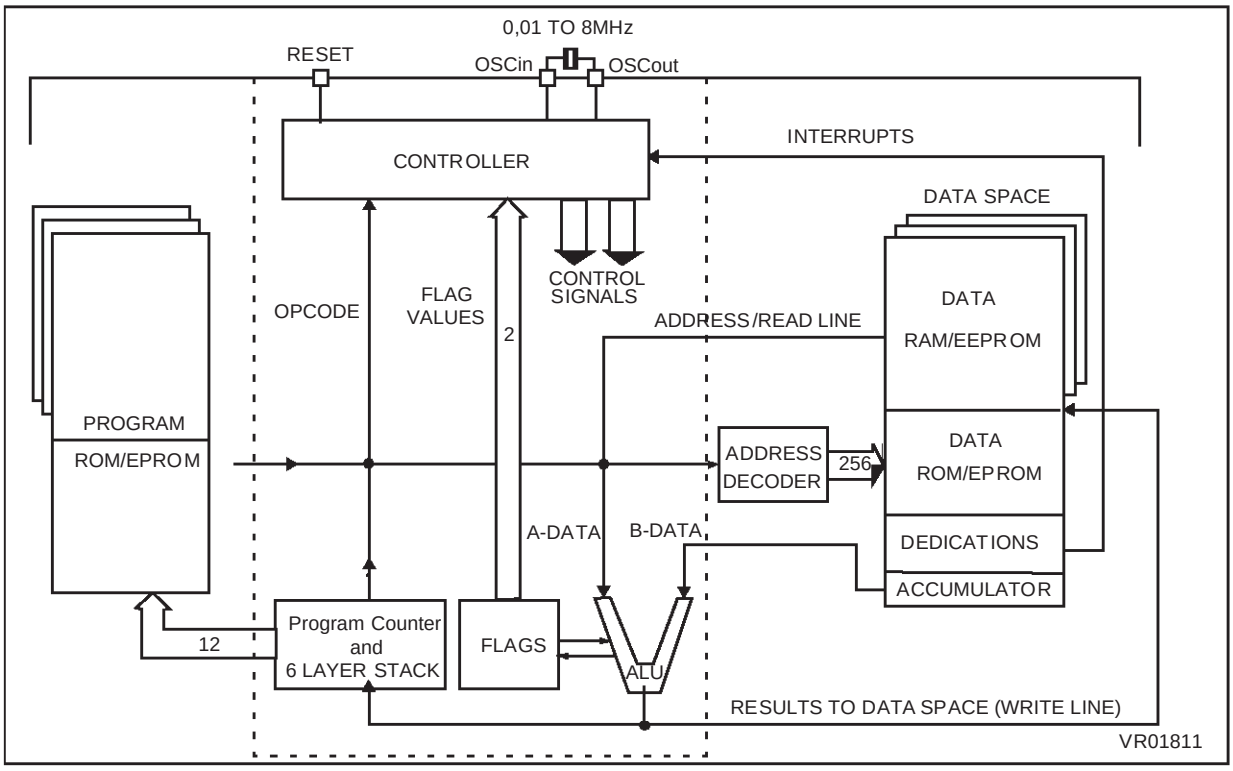

CPU REGISTERS (Cont'd)

However, if the program space contains more than 4096 bytes, the additional memory in program space can be addressed by using the Program Bank Switch register.

The PC value is incremented after reading the address of the current instruction. To execute relative jumps, the PC and the offset are shifted through the ALU, where they are added; the result is then shifted back into the PC. The program counter can be changed in the following ways:

- JP (Jump) instructionPC=Jump address
- CALL instructionPC= Call address
- Relative Branch Instruction.PC= PC +/- offset
- Interrupt PC=Interrupt vector
- Reset PC= Reset vector
- RET & RETI instructionsPC= Pop (stack)
- Normal instructionPC= PC + 1

Flags (C, Z). The ST6 CPU includes three pairs of flags (Carry and Zero), each pair being associated with one of the three normal modes of operation: Normal mode, Interrupt mode and Non Maskable Interrupt mode. Each pair consists of a CARRY flag and a ZERO flag. One pair (CN, ZN) is used during Normal operation, another pair is used during Interrupt mode (CI, ZI), and a third pair is used in the Non Maskable Interrupt mode (CNMI, ZNMI).

The ST6 CPU uses the pair of flags associated with the current mode: as soon as an interrupt (or a Non Maskable Interrupt) is generated, the ST6 CPU uses the Interrupt flags (resp. the NMI flags) instead of the Normal flags. When the RETI instruction is executed, the previously used set of flags is restored. It should be noted that each flag set can only be addressed in its own context (Non Maskable Interrupt, Normal Interrupt or Main routine). The flags are not cleared during context switching and thus retain their status.

The Carry flag is set when a carry or a borrow occurs during arithmetic operations; otherwise it is cleared. The Carry flag is also set to the value of the bit tested in a bit test instruction; it also participates in the rotate left instruction.

The Zero flag is set if the result of the last arithmetic or logical operation was equal to zero; otherwise it is cleared.

Switching between the three sets of flags is performed automatically when an NMI, an interrupt or a RETI instructions occurs. As the NMI mode is automatically selected after the reset of the MCU, the ST6 core uses at first the NMI flags.

Stack. The ST6 CPU includes a true LIFO hardware stack which eliminates the need for a stack pointer. The stack consists of six separate 12-bit RAM locations that do not belong to the data space RAM area. When a subroutine call (or interrupt request) occurs, the contents of each level are shifted into the next higher level, while the content of the PC is shifted into the first level (the original contents of the sixth stack level are lost). When a subroutine or interrupt return occurs (RET or RETI instructions), the first level register is shifted back into the PC and the value of each level is popped back into the previous level. Since the accumulator, in common with all other data space registers, is not stored in this stack, management of these registers should be performed within the subroutine. The stack will remain in its "deepest" position if more than 6 nested calls or interrupts are executed, and consequently the last return address will be lost. It will also remain in its highest position if the stack is empty and a RET or RETI is executed. In this case the next instruction will be executed.

Figure 7. ST6 CPU Programming Mode

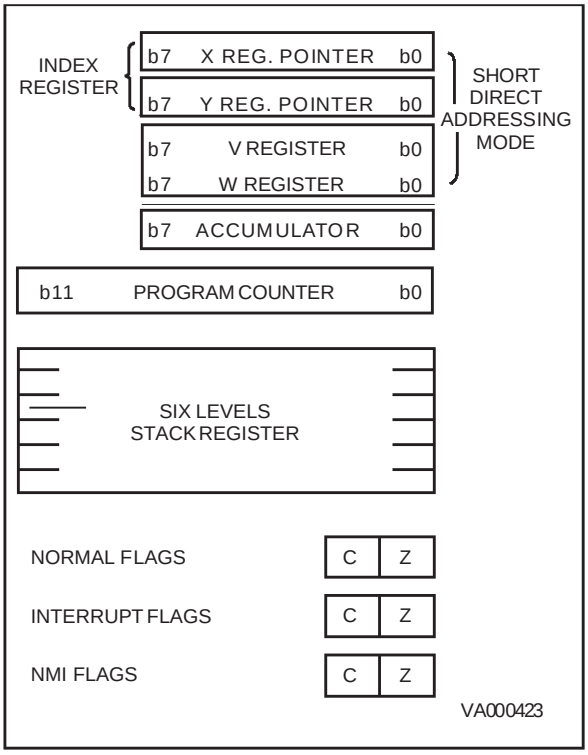

3 CLOCKS, RESET, INTERRUPTS AND POWER SAVING MODES

3.1 CLOCK SYSTEM

The MCU features a Main Oscillator which can be driven by an external clock, or used in conjunction with an AT-cut parallel resonant crystal or a suitable ceramic resonator, or with an external resistor (R_{NET}). In addition, a Low Frequency Auxiliary Oscillator (LFAO) can be switched in for security reasons, to reduce power consumption, or to offer the benefits of a back-up clock system.

The Oscillator Safeguard (OSG) option filters spikes from the oscillator lines, provides access to the LFAO to provide a backup oscillator in the event of main oscillator failure and also automatically limits the internal clock frequency (f_{INT}) as a function of V_{DD}, in order to guarantee correct operation. These functions are illustrated in Figure 9, Figure 10, Figure 11 and Figure 12.

Figure 8 illustrates various possible oscillator configurations using an external crystal or ceramic resonator, an external clock input, an external resistor (R_{NET}), or the lowest cost solution using only the LFAO. C_{L1} an C_{L2} should have a capacitance in the range 12 tST6_CLK1o 22 pF for an oscillator frequency in the 4-8 MHz range.

The internal MCU clock frequency (f_{INT}) is divided by 12 to drive the Timer, the A/D converter and the Watchdog timer, and by 13 to drive the CPU core, as may be seen in Figure 11.

With an 8MHz oscillator frequency, the fastest machine cycle is therefore 1.625µs.

A machine cycle is the smallest unit of time needed to execute any operation (for instance, to increment the Program Counter). An instruction may require two, four, or five machine cycles for execution.

3.1.1 Main Oscillator

The oscillator configuration may be specified by selecting the appropriate option. When the CRYSTAL/RESONATOR option is selected, it must be used with a quartz crystal, a ceramic resonator or an external signal provided on the OSCin pin. When the RC NETWORK option is selected, the system clock is generated by an external resistor.

The main oscillator can be turned off (when the OSG ENABLED option is selected) by setting the OSCOFF bit of the ADC Control Register. The Low Frequency Auxiliary Oscillator is automatically started.

Figure 8. Oscillator Configurations

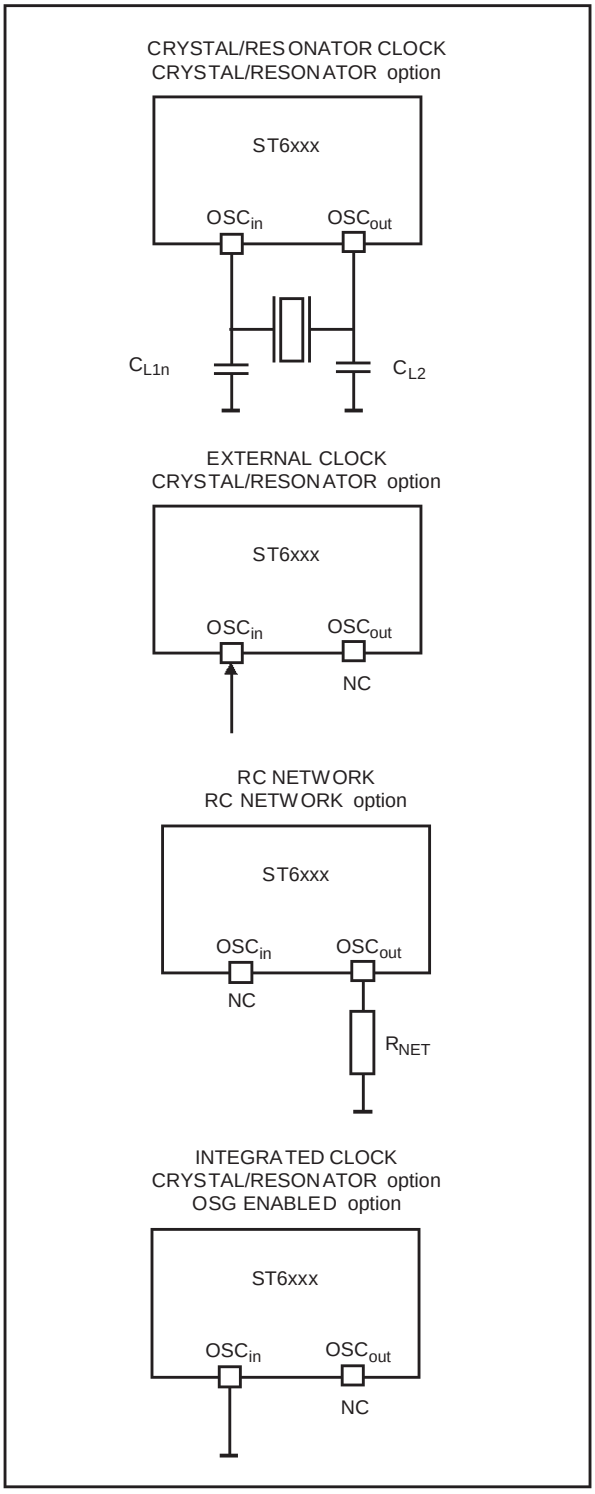

CLOCK SYSTEM (Cont'd)

Turning on the main oscillator is achieved by resetting the OSCOFF bit of the A/D Converter Control Register or by resetting the MCU. Restarting the main oscillator implies a delay comprising the oscillator start up delay period plus the duration of the software instruction at f_{LFAO} clock frequency.

3.1.2 Low Frequency Auxiliary Oscillator (LFAO)

The Low Frequency Auxiliary Oscillator has three main purposes. Firstly, it can be used to reduce power consumption in non timing critical routines. Secondly, it offers a fully integrated system clock, without any external components. Lastly, it acts as a safety oscillator in case of main oscillator failure.

This oscillator is available when the OSG ENABLED option is selected. In this case, it automatically starts one of its periods after the first missing edge from the main oscillator, whatever the reason (main oscillator defective, no clock circuitry provided, main oscillator switched off...).

User code, normal interrupts, WAIT and STOP instructions, are processed as normal, at the reduced f_{LFAO} frequency. The A/D converter accuracy is decreased, since the internal frequency is below 1MHz.

At power on, the Low Frequency Auxiliary Oscillator starts faster than the Main Oscillator. It therefore feeds the on-chip counter generating the POR delay until the Main Oscillator runs.

The Low Frequency Auxiliary Oscillator is automatically switched off as soon as the main oscillator starts.

ADCR

Address: 0D1h — Read/Write

7							0
ADCR 7	ADCR 6	ADCR 5	ADCR 4	ADCR 3	OSC OFF	ADCR 1	ADCR 0

Bit 7-3, 1-0= **ADCR7-ADCR3, ADCR1-ADCR0**: *ADC Control Register***.** These bits are not used.

Bit 2 = **OSCOFF**. When low, this bit enables main oscillator to run. The main oscillator is switched off when OSCOFF is high.

3.1.3 Oscillator Safe Guard

The Oscillator Safe Guard (OSG) affords drastically increased operational integrity in ST62xx devices. The OSG circuit provides three basic functions: it filters spikes from the oscillator lines which would result in over frequency to the ST62 CPU; it gives access to the Low Frequency Auxiliary Oscillator (LFAO), used to ensure minimum processing in case of main oscillator failure, to offer reduced power consumption or to provide a fixed frequency low cost oscillator; finally, it automatically limits the internal clock frequency as a function of supply voltage, in order to ensure correct operation even if the power supply should drop.

The OSG is enabled or disabled by choosing the relevant OSG option. It may be viewed as a filter whose cross-over frequency is device dependent.

Spikes on the oscillator lines result in an effectively increased internal clock frequency. In the absence of an OSG circuit, this may lead to an over frequency for a given power supply voltage. The OSG filters out such spikes (as illustrated in Figure 9). In all cases, when the OSG is active, the maximum internal clock frequency, f_{INT}, is limited to f_{OSG}, which is supply voltage dependent. This relationship is illustrated in Figure 12.

When the OSG is enabled, the Low Frequency Auxiliary Oscillator may be accessed. This oscillator starts operating after the first missing edge of the main oscillator (see Figure 10).

Over-frequency, at a given power supply level, is seen by the OSG as spikes; it therefore filters out some cycles in order that the internal clock frequency of the device is kept within the range the particular device can stand (depending on V_{DD}), and below f_{OSG}: the maximum authorised frequency with OSG enabled.

Note. The OSG should be used wherever possible as it provides maximum safety. Care must be taken, however, as it can increase power consumption and reduce the maximum operating frequency to f_{OSG}.

Warning: Care has to be taken when using the OSG, as the internal frequency is defined between a minimum and a maximum value and is not accurate.

For precise timing measurements, it is not recommended to use the OSG and it should not be enabled in applications that use the SPI or the UART.

It should also be noted that power consumption in Stop mode is higher when the OSG is enabled (around 50µA at nominal conditions and room temperature).

CLOCK SYSTEM (Cont'd)

Figure 9. OSG Filtering Principle

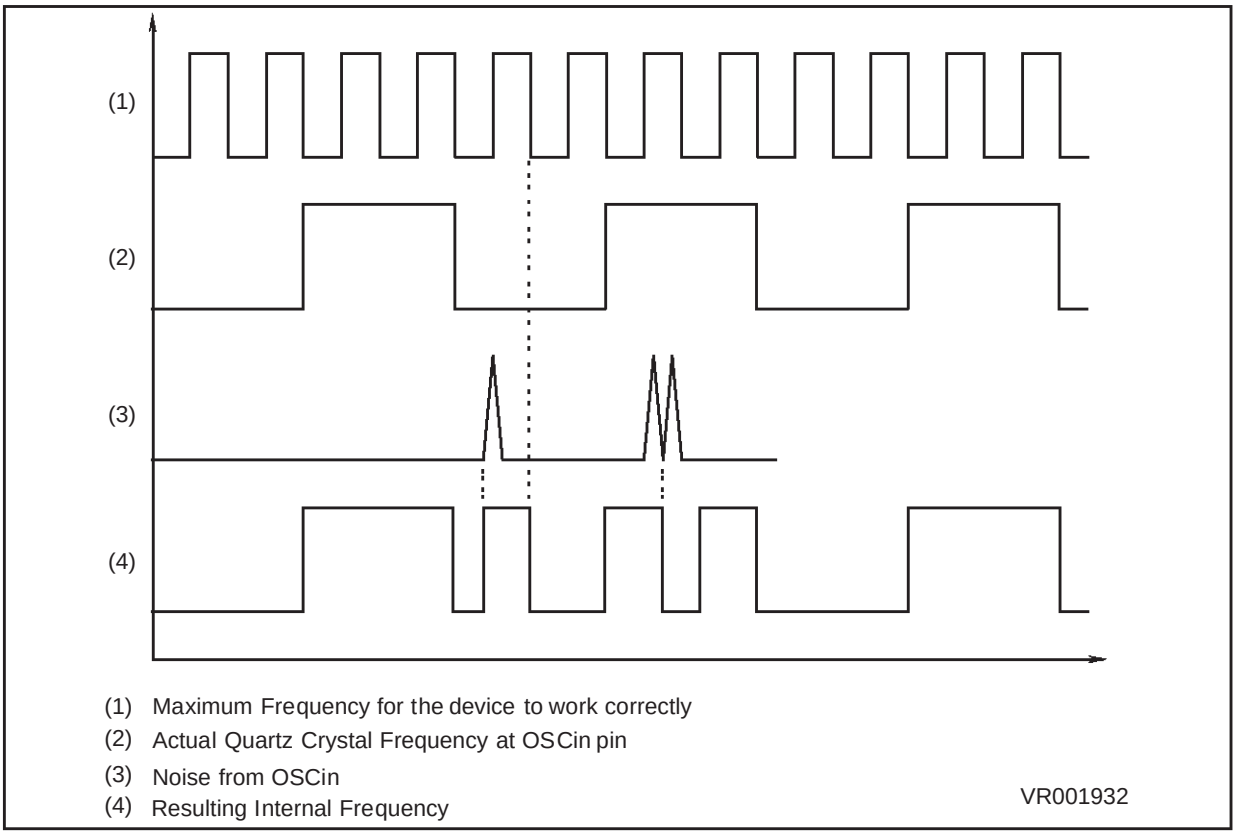

Figure 10. OSG Emergency Oscillator Principle

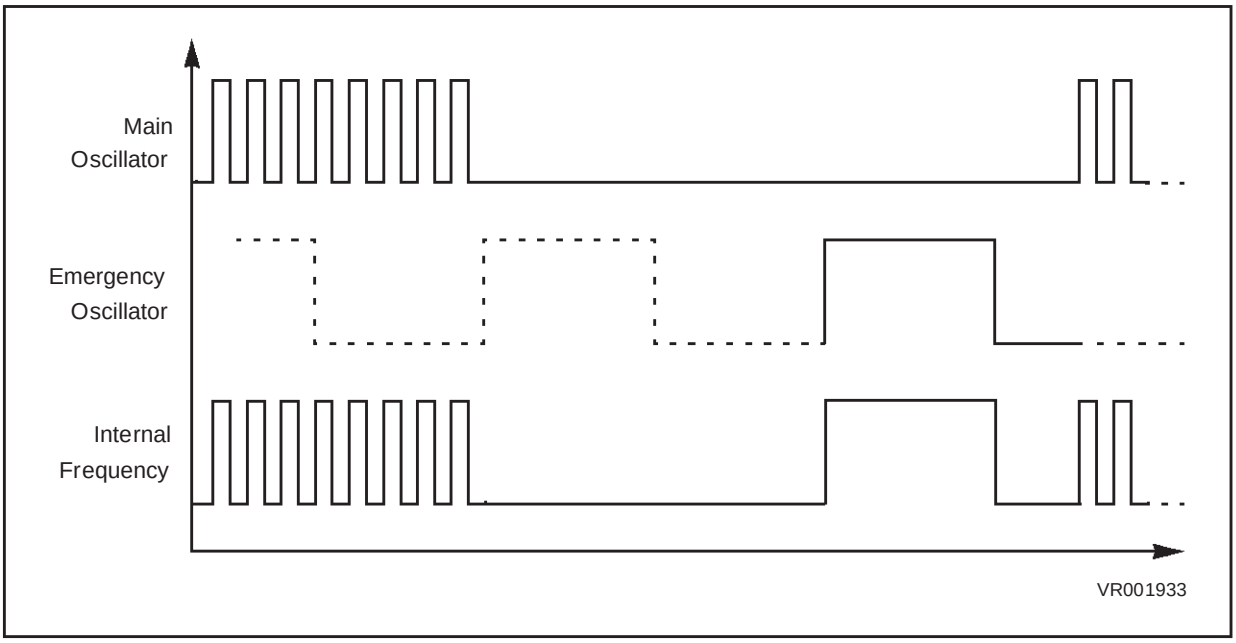

CLOCK SYSTEM (Cont'd)

Figure 11. Clock Circuit Block Diagram

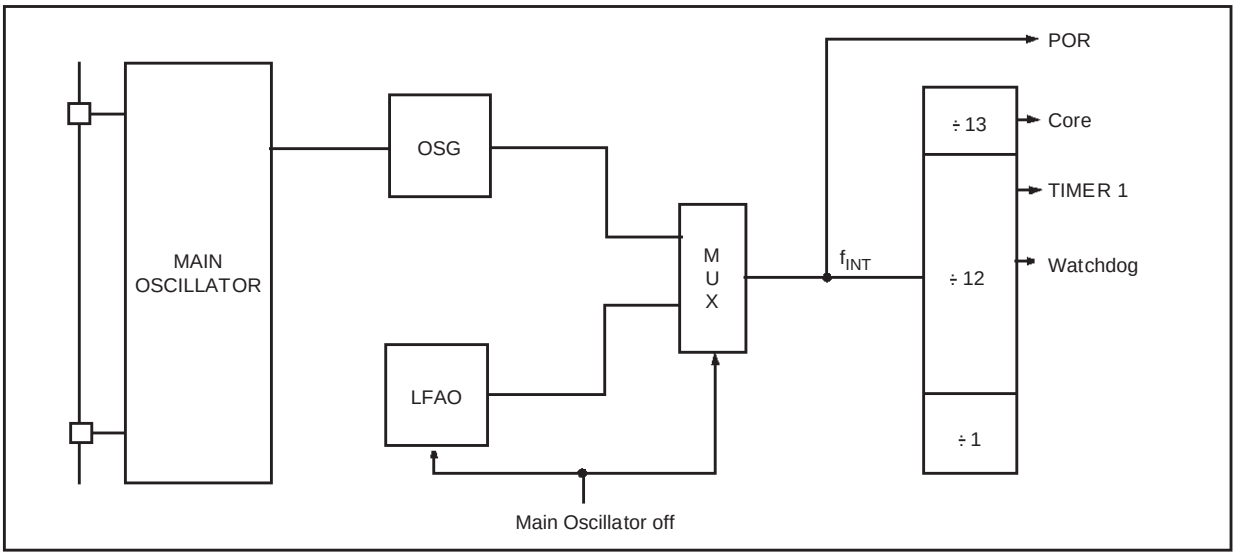

Figure 12. Maximum Operating Frequency (f_{MAX}) versus Supply Voltage (V_{DD})

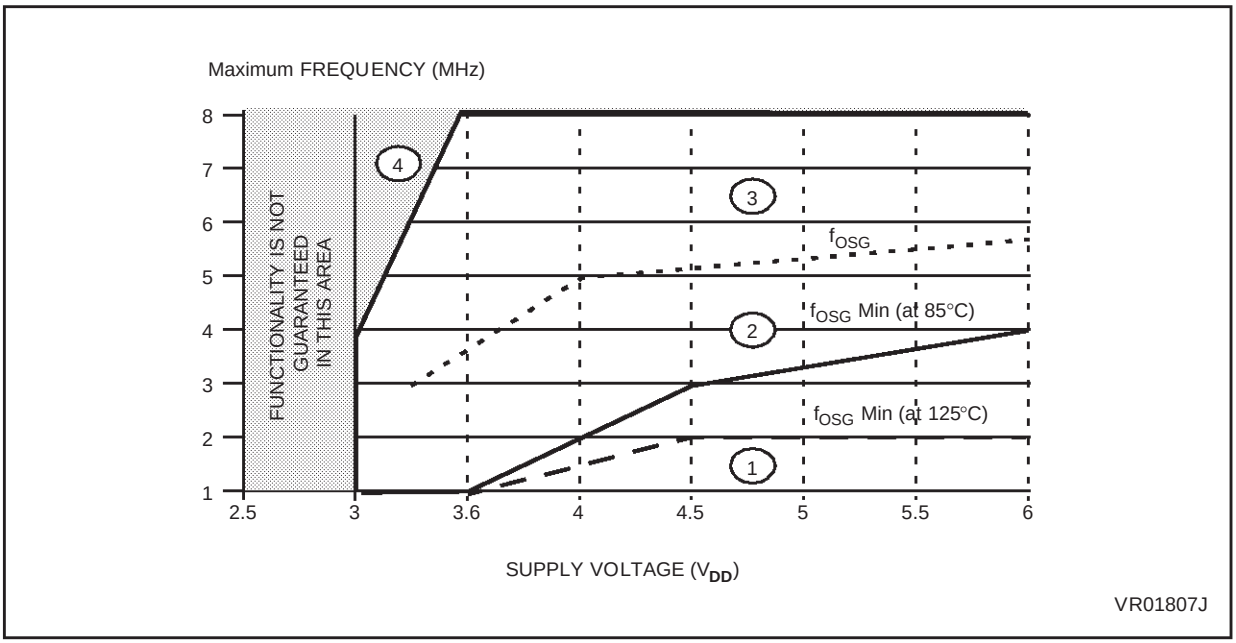

Notes:

1. In this area, operation is guaranteed at the quartz crystal frequency.

2. When the OSG is disabled, operation in this area is guaranteed at the crystal frequency. When the OSG is enabled, operation in this area is guaranteed at a frequency of at least $f_{OSG\ Min}$.

3. When the OSG is disabled, operation in this area is guaranteed at the quartz crystal frequency. When the OSG is enabled, access to this area is prevented. The internal frequency is kept a f_{OSG}.

4. When the OSG is disabled, operation in this area is not guaranteed
When the OSG is enabled, access to this area is prevented. The internal frequency is kept at f_{OSG}.

3.2 RESETS

The MCU can be reset in four ways:

– by the external Reset input being pulled low;

– by Power-on Reset;

– by the digital Watchdog peripheral timing out.

– by Low Voltage Detection (LVD)

3.2.1 RESET Input

The $\overline{\text{RESET}}$ pin may be connected to a device of the application board in order to reset the MCU if required. The $\overline{\text{RESET}}$ pin may be pulled low in RUN, WAIT or STOP mode. This input can be used to reset the MCU internal state and ensure a correct start-up procedure. The pin is active low and features a Schmitt trigger input. The internal Reset signal is generated by adding a delay to the external signal. Therefore even short pulses on the $\overline{\text{RESET}}$ pin are acceptable, provided V_{DD} has completed its rising phase and that the oscillator is running correctly (normal RUN or WAIT modes). The MCU is kept in the Reset state as long as the $\overline{\text{RESET}}$ pin is held low.

If $\overline{\text{RESET}}$ activation occurs in the RUN or WAIT modes, processing of the user program is stopped (RUN mode only), the Inputs and Outputs are configured as inputs with pull-up resistors and the main Oscillator is restarted. When the level on the RESET pin then goes high, the initialization sequence is executed following expiry of the internal delay period.

If $\overline{\text{RESET}}$ pin activation occurs in the STOP mode, the oscillator starts up and all Inputs and Outputs are configured as inputs with pull-up resistors. When the level of the $\overline{\text{RESET}}$ pin then goes high, the initialization sequence is executed following expiry of the internal delay period.

3.2.2 Power-on Reset

The function of the POR circuit consists in waking up the MCU by detecting around 2V a dynamic (rising edge) variation of the VDD Supply. At the beginning of this sequence, the MCU is configured in the Reset state: all I/O ports are configured as inputs with pull-up resistors and no instruction is executed. When the power supply voltage rises to a sufficient level, the oscillator starts to operate, whereupon an internal delay is initiated, in order to allow the oscillator to fully stabilize before executing the first instruction. The initialization sequence is executed immediately following the internal delay.

To ensure correct start-up, the user should take care that the VDD Supply is stabilized at a sufficient level for the chosen frequency (see recommended operation) before the reset signal is released. In addition, supply rising must start from 0V.

As a consequence, the POR does not allow to supervise static, slowly rising, or falling, or noisy (presenting oscillation) VDD supplies.

An external RC network connected to the $\overline{\text{RESET}}$ pin, or the LVD reset can be used instead to get the best performances.

Figure 13. Reset and Interrupt Processing

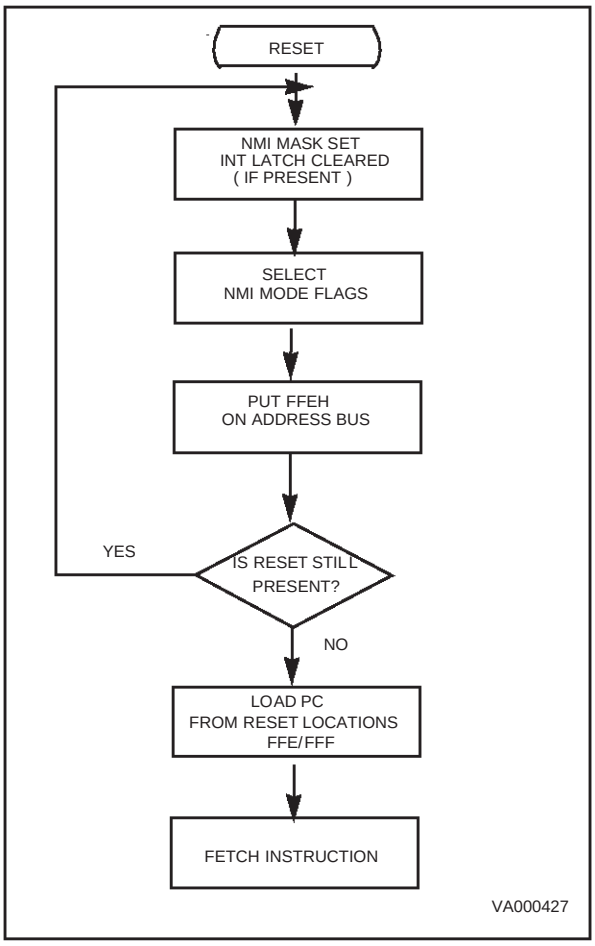

RESETS (Cont'd)

3.2.3 Watchdog Reset

The MCU provides a Watchdog timer function in order to ensure graceful recovery from software upsets. If the Watchdog register is not refreshed before an end-of-count condition is reached, the internal reset will be activated. This, amongst other things, resets the watchdog counter.

The MCU restarts just as though the Reset had been generated by the $\overline{\text{RESET}}$ pin, including the built-in stabilisation delay period.

3.2.4 LVD Reset

The on-chip Low Voltage Detector, selectable as user option, features static Reset when supply voltage is below a reference value. Thanks to this feature, external reset circuit can be removed while keeping the application safety. This SAFE RESET is effective as well in Power-on phase as in power supply drop with different reference values, allowing hysteresis effect. Reference value in case of voltage drop has been set lower than the reference value for power-on in order to avoid any parasitic Reset when MCU start's running and sinking current on the supply.

As long as the supply voltage is below the reference value, there is a internal and static RESET command. The MCU can start only when the supply voltage rises over the reference value. Therefore, only two operating mode exist for the MCU: RESET active below the voltage reference, and running mode over the voltage reference as shown on the Figure 14, that represents a power-up, power-down sequence.

Note: When the RESET state is controlled by one of the internal RESET sources (Low Voltage Detector, Watchdog, Power on Reset), the RESET pin is tied to low logic level.

Figure 14. LVD Reset on Power-on and Power-down (Brown-out)

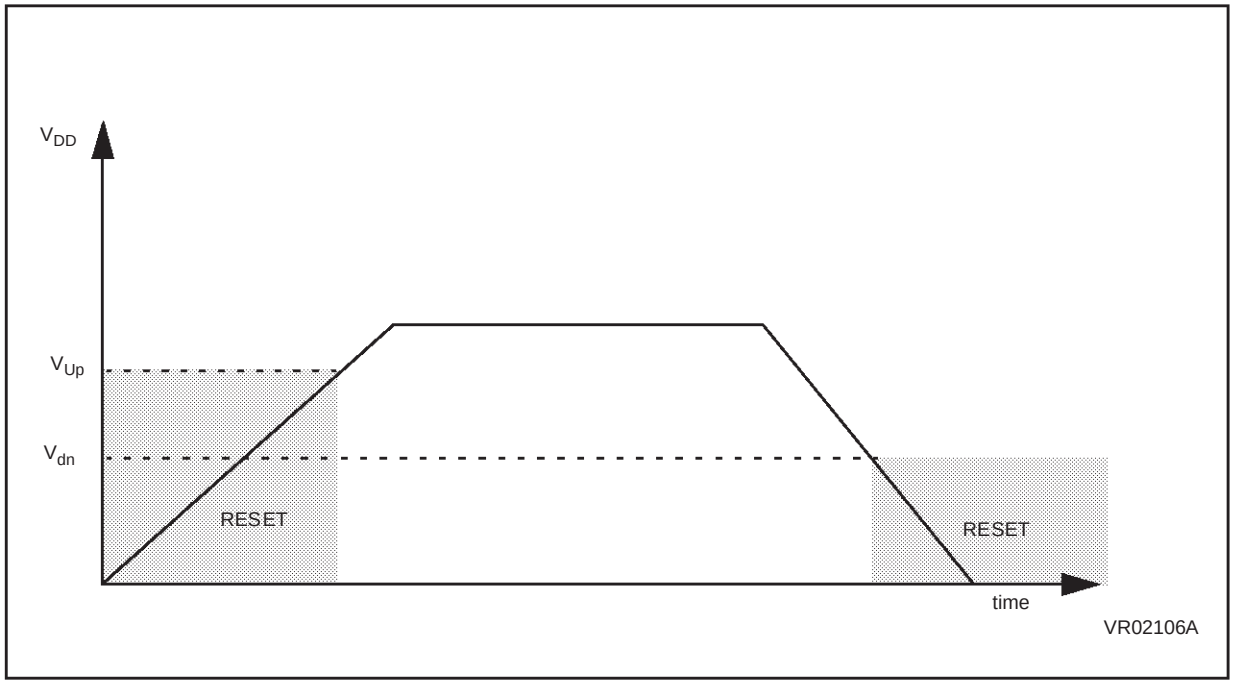

3.2.5 Application Notes

No external resistor is required between V_{DD} and the Reset pin, thanks to the built-in pull-up device.

Direct external connection of the pin $\overline{\text{RESET}}$ to V_{DD} must be avoided in order to ensure safe behaviour of the internal reset sources (AND.Wired structure).

RESETS (Cont'd)

3.2.6 MCU Initialization Sequence

When a reset occurs the stack is reset, the PC is loaded with the address of the Reset Vector (located in program ROM starting at address 0FFEh). A jump to the beginning of the user program must be coded at this address. Following a Reset, the Interrupt flag is automatically set, so that the CPU is in Non Maskable Interrupt mode; this prevents the initialisation routine from being interrupted. The initialisation routine should therefore be terminated by a RETI instruction, in order to revert to normal mode and enable interrupts. If no pending interrupt is present at the end of the initialisation routine, the MCU will continue by processing the instruction immediately following the RETI instruction. If, however, a pending interrupt is present, it will be serviced.

Figure 15. Reset and Interrupt Processing

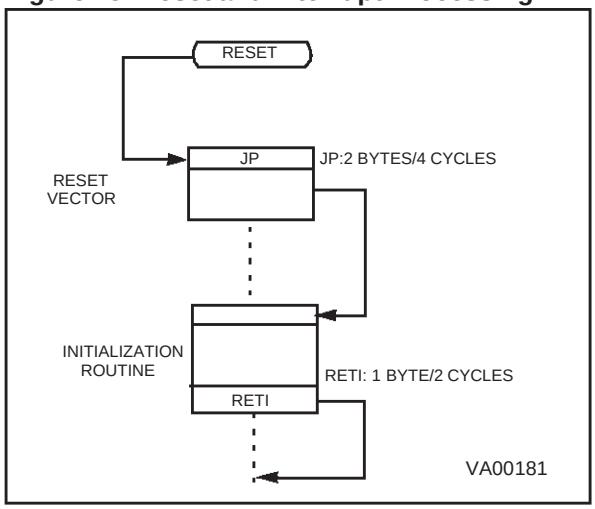

Figure 16. Reset Block Diagram

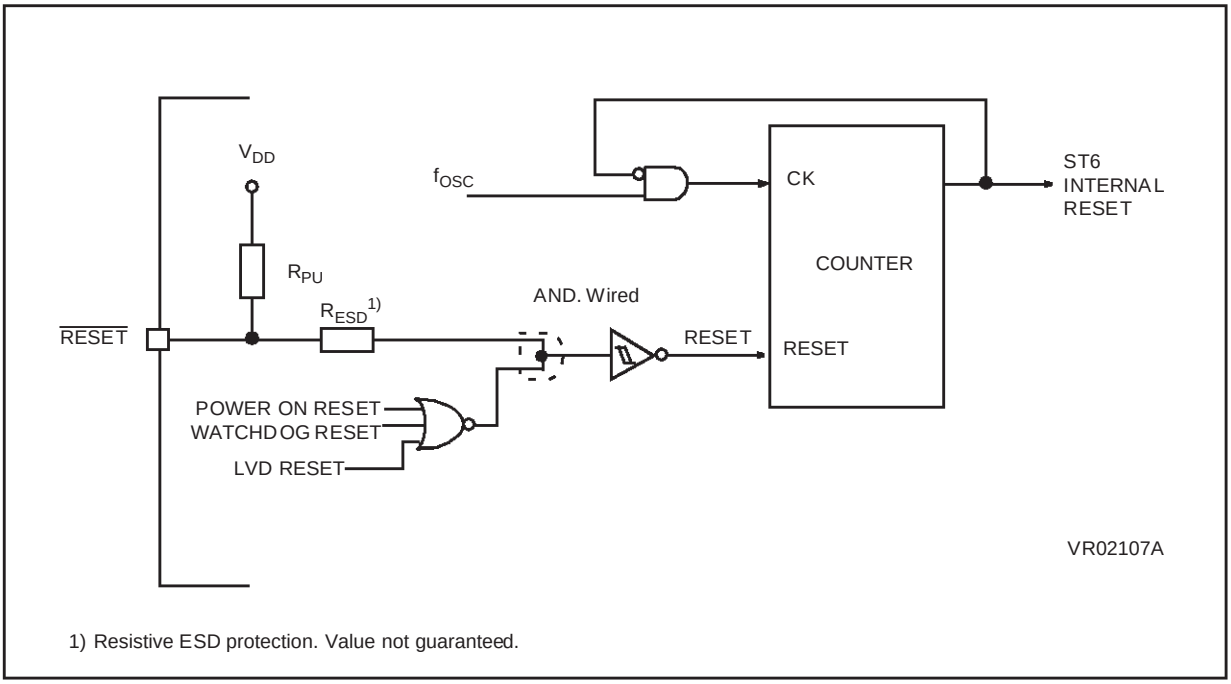

1) Resistive ESD protection. Value not guaranteed.

RESETS (Cont'd)

Table 6. Register Reset Status

Register	Address(es)	Status	Comment
Port Data Registers	0C0h, 0C1h, 0C3h		I/O are Input with or without pull-up depending on PORT PULL option
Port Direction Register	0C4h, 0C5h, 0C7h		
Port Option Register	0CCh, 0CDh, 0CFh		
Interrupt Option Register	0C8h		Interrupt disabled
TIMER Status/Control	0D4h	00h	TIMER disabled
AR TIMER Mode/Control Register	0E5h		AR TIMER disabled
AR TIMER Status/Control Register 0	0E6h		
AR TIMER Status/Control Register 1	0E7h		
X, Y, V, W, Register	080H TO 083H		
Accumulator	0FFh		
Data RAM	084h to 0BFh		
Data RAM Page Register	0CBh		
Data ROM Window Register	0C9h	Undefined	
A/D Result Register	0D0h		
ARTIMER Reload/Capture Register	0E9h		
ARTIMER Compare Registers	0EAh		
ARTIMER Load Registers	0EBh		
TIMER Counter Register	0D3h	FFh	
TIMER Prescaler Register	0D2h	7Fh	Max count loaded
Watchdog Counter Register	0D8h	FEh	
A/D Control Register	0D1h	40h	A/D in Stand-by
UART Status Control	0D7h		UART disabled

3.3 DIGITAL WATCHDOG

The digital Watchdog consists of a reloadable downcounter timer which can be used to provide controlled recovery from software upsets.

The Watchdog circuit generates a Reset when the downcounter reaches zero. User software can prevent this reset by reloading the counter, and should therefore be written so that the counter is regularly reloaded while the user program runs correctly. In the event of a software mishap (usually caused by externally generated interference), the user program will no longer behave in its usual fashion and the timer register will thus not be reloaded periodically. Consequently the timer will decrement down to 00h and reset the MCU. In order to maximise the effectiveness of the Watchdog function, user software must be written with this concept in mind.

Watchdog behaviour is governed by two options, known as “WATCHDOG ACTIVATION” (i.e. HARDWARE or SOFTWARE) and “EXTERNAL STOP MODE CONTROL” (see Table 7).

In the SOFTWARE option, the Watchdog is disabled until bit C of the DWDR register has been set.

When the Watchdog is disabled, low power Stop mode is available. Once activated, the Watchdog cannot be disabled, except by resetting the MCU.

In the HARDWARE option, the Watchdog is permanently enabled. Since the oscillator will run continuously, low power mode is not available. The STOP instruction is interpreted as a WAIT instruction, and the Watchdog continues to countdown.

However, when the EXTERNAL STOP MODE CONTROL option has been selected low power consumption may be achieved in Stop Mode.

Execution of the STOP instruction is then governed by a secondary function associated with the NMI pin. If a STOP instruction is encountered when the NMI pin is low, it is interpreted as WAIT, as described above. If, however, the STOP instruction is encountered when the NMI pin is high, the Watchdog counter is frozen and the CPU enters STOP mode.

When the MCU exits STOP mode (i.e. when an interrupt is generated), the Watchdog resumes its activity.

Table 7. Recommended Option Choices

Functions Required	Recommended Options
Stop Mode & Watchdog	“EXTERNAL STOP MODE” & “HARDWARE WATCHDOG”
Stop Mode	“SOFTWARE WATCHDOG”
Watchdog	“HARDWARE WATCHDOG”

DIGITAL WATCHDOG (Cont'd)

The Watchdog is associated with a Data space register (Digital WatchDog Register, DWDR, location 0D8h) which is described in greater detail in Section 3.3.1 Digital Watchdog Register (DWDR). This register is set to 0FEh on Reset: bit C is cleared to "0", which disables the Watchdog; the timer downcounter bits, T0 to T5, and the SR bit are all set to "1", thus selecting the longest Watchdog timer period. This time period can be set to the user's requirements by setting the appropriate value for bits T0 to T5 in the DWDR register. The SR bit must be set to "1", since it is this bit which generates the Reset signal when it changes to "0"; clearing this bit would generate an immediate Reset.

It should be noted that the order of the bits in the DWDR register is inverted with respect to the associated bits in the down counter: bit 7 of the DWDR register corresponds, in fact, to T0 and bit 2 to T5. The user should bear in mind the fact that these bits are inverted and shifted with respect to the physical counter bits when writing to this register. The relationship between the DWDR register bits and the physical implementation of the Watchdog timer downcounter is illustrated in Figure 17.

Only the 6 most significant bits may be used to define the time period, since it is bit 6 which triggers the Reset when it changes to "0". This offers the user a choice of 64 timed periods ranging from 3,072 to 196,608 clock cycles (with an oscillator frequency of 8MHz, this is equivalent to timer periods ranging from 384µs to 24.576ms).

Figure 17. Watchdog Counter Control

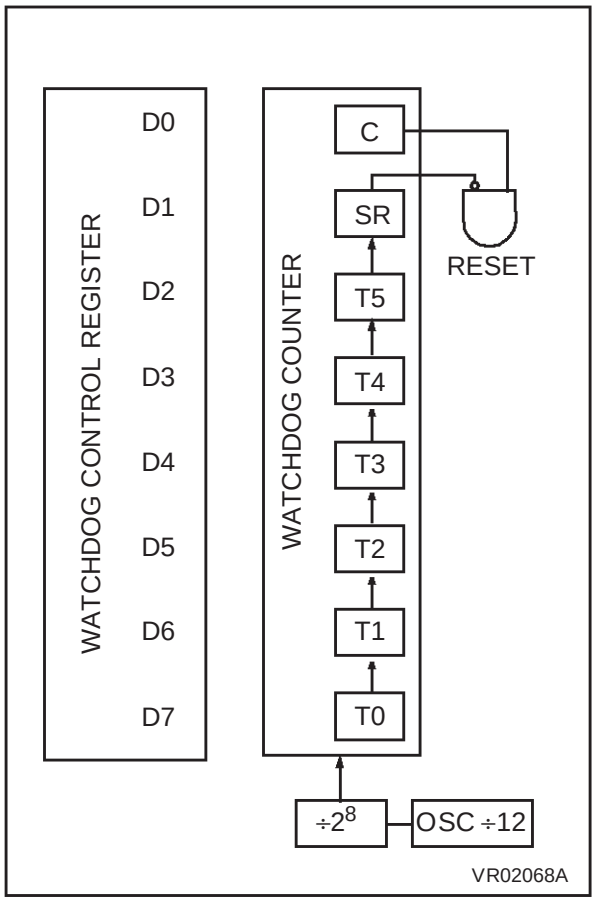

DIGITAL WATCHDOG (Cont'd)

3.3.1 Digital Watchdog Register (DWDR)

Address: 0D8h — Read/Write

Reset status: 1111 1110b

7							0
T0	T1	T2	T3	T4	T5	SR	C

Bit 0 = **C**: *Watchdog Control bit*

If the hardware option is selected, this bit is forced high and the user cannot change it (the Watchdog is always active). When the software option is selected, the Watchdog function is activated by setting bit C to 1, and cannot then be disabled (save by resetting the MCU).

When C is kept low the counter can be used as a 7-bit timer.

This bit is cleared to "0" on Reset.

Bit 1 = **SR**: *Software Reset bit*

This bit triggers a Reset when cleared.

When C = "0" (Watchdog disabled) it is the MSB of the 7-bit timer.

This bit is set to "1" on Reset.

Bits 2-7 = **T5-T0**: *Downcounter bits*

It should be noted that the register bits are reversed and shifted with respect to the physical counter: bit-7 (T0) is the LSB of the Watchdog downcounter and bit-2 (T5) is the MSB.

These bits are set to "1" on Reset.

3.3.2 Application Notes

The Watchdog plays an important supporting role in the high noise immunity of ST62xx devices, and should be used wherever possible. Watchdog related options should be selected on the basis of a trade-off between application security and STOP mode availability.

When STOP mode is not required, hardware activation without EXTERNAL STOP MODE CONTROL should be preferred, as it provides maximum security, especially during power-on.

When STOP mode is required, hardware activation and EXTERNAL STOP MODE CONTROL should be chosen. NMI should be high by default, to allow STOP mode to be entered when the MCU is idle.

The NMI pin can be connected to an I/O line (see Figure 18) to allow its state to be controlled by software. The I/O line can then be used to keep NMI low while Watchdog protection is required, or to avoid noise or key bounce. When no more processing is required, the I/O line is released and the device placed in STOP mode for lowest power consumption.

When software activation is selected and the Watchdog is not activated, the downcounter may be used as a simple 7-bit timer (remember that the bits are in reverse order).

The software activation option should be chosen only when the Watchdog counter is to be used as a timer. To ensure the Watchdog has not been unexpectedly activated, the following instructions should be executed within the first 27 instructions:

```
jrr 0, WD, #+3
ldi WD, 0FDH
```

DIGITAL WATCHDOG (Cont'd)

These instructions test the C bit and Reset the MCU (i.e. disable the Watchdog) if the bit is set (i.e. if the Watchdog is active), thus disabling the Watchdog.

In all modes, a minimum of 28 instructions are executed after activation, before the Watchdog can generate a Reset. Consequently, user software should load the watchdog counter within the first 27 instructions following Watchdog activation (software mode), or within the first 27 instructions executed following a Reset (hardware activation).

It should be noted that when the GEN bit is low (interrupts disabled), the NMI interrupt is active but cannot cause a wake up from STOP/WAIT modes.

Figure 18. A typical circuit making use of the EXERNAL STOP MODE CONTROL feature

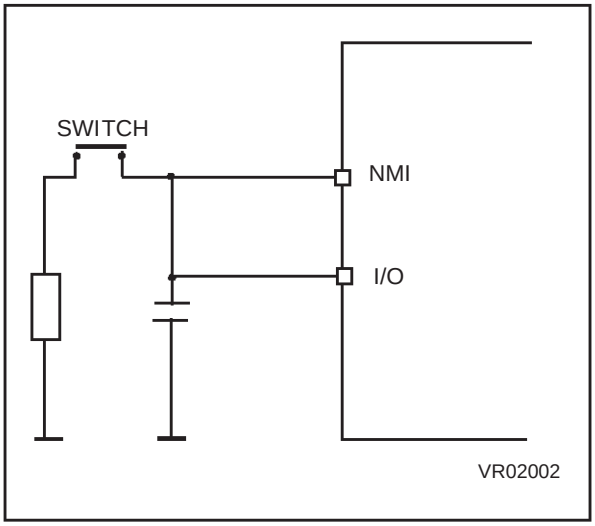

Figure 19. Digital Watchdog Block Diagram

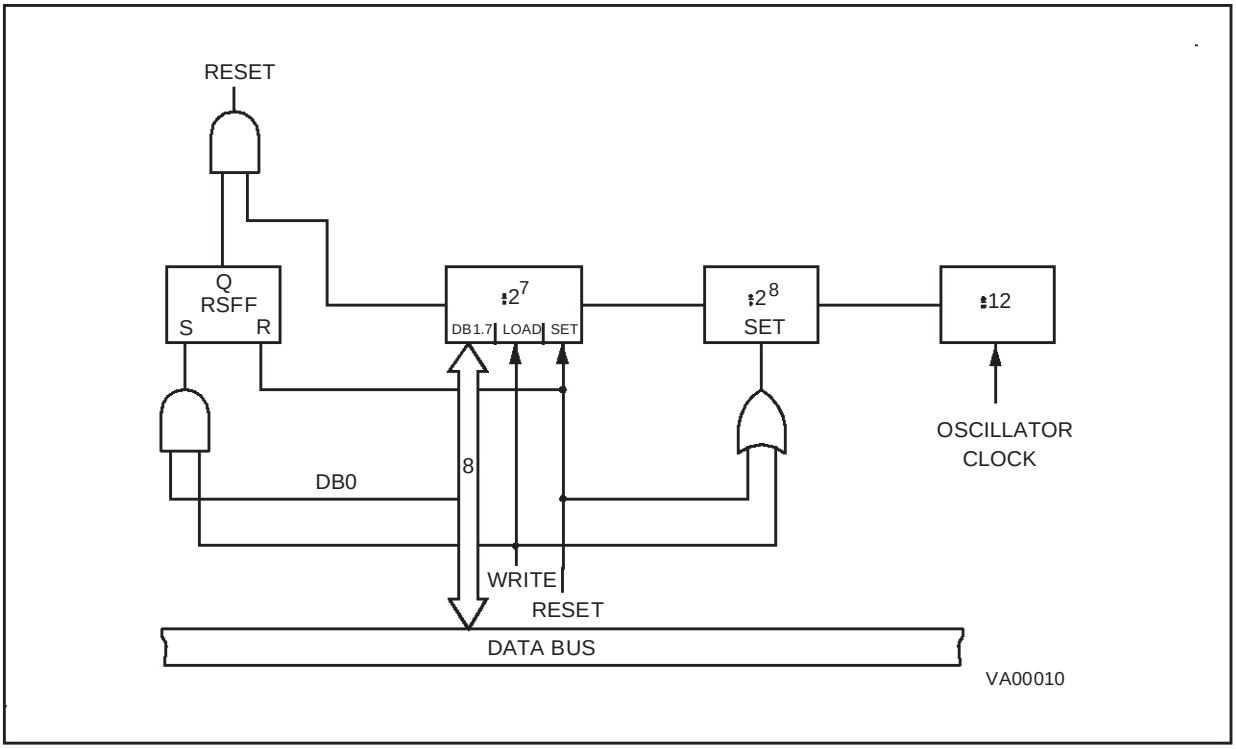

3.4 INTERRUPTS

The CPU can manage four Maskable Interrupt sources, in addition to a Non Maskable Interrupt source (top priority interrupt). Each source is associated with a specific Interrupt Vector which contains a Jump instruction to the associated interrupt service routine. These vectors are located in Program space (see Table 8).

When an interrupt source generates an interrupt request, and interrupt processing is enabled, the PC register is loaded with the address of the interrupt vector (i.e. of the Jump instruction), which then causes a Jump to the relevant interrupt service routine, thus servicing the interrupt.

Interrupt sources are linked to events either on external pins, or on chip peripherals. Several events can be ORed on the same interrupt source, and relevant flags are available to determine which event triggered the interrupt.

The Non Maskable Interrupt request has the highest priority and can interrupt any interrupt routine at any time; the other four interrupts cannot interrupt each other. If more than one interrupt request is pending, these are processed by the processor core according to their priority level: source #1 has the higher priority while source #4 the lower. The priority of each interrupt source is fixed.

Table 8. Interrupt Vector Map

Interrupt Source	Priority	Vector Address
Interrupt source #0	1	(FFCh-FFDh)
Interrupt source #1	2	(FF6h-FF7h)
Interrupt source #2	3	(FF4h-FF5h)
Interrupt source #3	4	(FF2h-FF3h)
Interrupt source #4	5	(FF0h-FF1h)

3.4.1 Interrupt request

All interrupt sources but the Non Maskable Interrupt source can be disabled by setting accordingly the GEN bit of the Interrupt Option Register (IOR). This GEN bit also defines if an interrupt source, including the Non Maskable Interrupt source, can restart the MCU from STOP/WAIT modes.

Interrupt request from the Non Maskable Interrupt source #0 is latched by a flip flop which is automatically reset by the core at the beginning of the non-maskable interrupt service routine.

Interrupt request from source #1 can be configured either as edge or level sensitive by setting accordingly the LES bit of the Interrupt Option Register (IOR).

Interrupt request from source #2 are always edge sensitive. The edge polarity can be configured by setting accordingly the ESB bit of the Interrupt Option Register (IOR).

Interrupt request from sources #3 & #4 are level sensitive.

In edge sensitive mode, a latch is set when a edge occurs on the interrupt source line and is cleared when the associated interrupt routine is started. So, the occurrence of an interrupt can be stored, until completion of the running interrupt routine before being processed. If several interrupt requests occurs before completion of the running interrupt routine, only the first request is stored.

Storage of interrupt requests is not available in level sensitive mode. To be taken into account, the low level must be present on the interrupt pin when the MCU samples the line after instruction execution.

At the end of every instruction, the MCU tests the interrupt lines: if there is an interrupt request the next instruction is not executed and the appropriate interrupt service routine is executed instead.

Table 9. Interrupt Option Register Description

GEN	SET	Enable all interrupts
	CLEARED	Disable all interrupts
ESB	SET	Rising edge mode on interrupt source #2
	CLEARED	Falling edge mode on interrupt source #2
LES	SET	Level-sensitive mode on interrupt source #1
	CLEARED	Falling edge mode on interrupt source #1
OTHERS	NOT USED	

INTERRUPTS (Cont'd)

3.4.2 Interrupt Procedure

The interrupt procedure is very similar to a call procedure, indeed the user can consider the interrupt as an asynchronous call procedure. As this is an asynchronous event, the user cannot know the context and the time at which it occurred. As a result, the user should save all Data space registers which may be used within the interrupt routines. There are separate sets of processor flags for normal, interrupt and non-maskable interrupt modes, which are automatically switched and so do not need to be saved.

The following list summarizes the interrupt procedure:

MCU

– The interrupt is detected.

– The C and Z flags are replaced by the interrupt flags (or by the NMI flags).

– The PC contents are stored in the first level of the stack.

– The normal interrupt lines are inhibited (NMI still active).

– The first internal latch is cleared.

– The associated interrupt vector is loaded in the PC.

WARNING: In some circumstances, when a maskable interrupt occurs while the ST6 core is in NORMAL mode and especially during the execution of an "ldi IOR, 00h" instruction (disabling all maskable interrupts): if the interrupt arrives during the first 3 cycles of the "ldi" instruction (which is a 4-cycle instruction) the core will switch to interrupt mode BUT the flags CN and ZN will NOT switch to the interrupt pair CI and ZI.

User

– User selected registers are saved within the interrupt service routine (normally on a software stack).

– The source of the interrupt is found by polling the interrupt flags (if more than one source is associated with the same vector).

– The interrupt is serviced.

– Return from interrupt (RETI)

MCU

– Automatically the MCU switches back to the normal flag set (or the interrupt flag set) and pops the previous PC value from the stack.

The interrupt routine usually begins by the identifying the device which generated the interrupt request (by polling). The user should save the registers which are used within the interrupt routine in a software stack. After the RETI instruction is executed, the MCU returns to the main routine.

Figure 20. Interrupt Processing Flow Chart

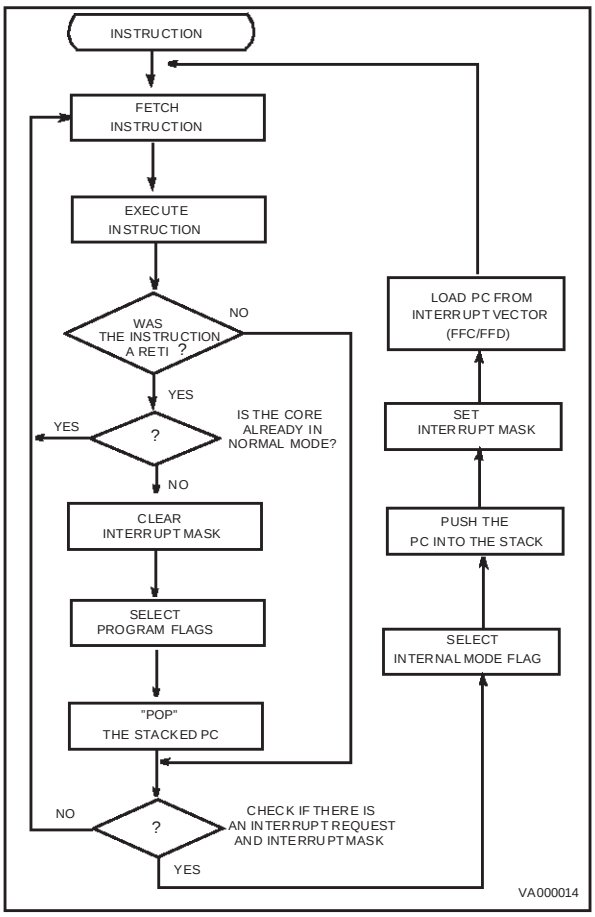

INTERRUPTS (Cont'd)

3.4.3 Interrupt Option Register (IOR)

The Interrupt Option Register (IOR) is used to enable/disable the individual interrupt sources and to select the operating mode of the external interrupt inputs. This register is write-only and cannot be accessed by single-bit operations.

Address: 0C8h — Write Only

Reset status: 00h

7							0
-	LES	ESB	GEN	-	-	-	-

Bit 7, Bits 3-0 = *Unused*.

Bit 6 = **LES**: *Level/Edge Selection bit*.

When this bit is set to one, the interrupt source #1 is level sensitive. When cleared to zero the edge sensitive mode for interrupt request is selected.

Bit 5 = **ESB**: *Edge Selection bit*.

The bit ESB selects the polarity of the interrupt source #2.

Bit 4 = **GEN**: *Global Enable Interrupt*. When this bit is set to one, all interrupts are enabled. When this bit is cleared to zero all the interrupts (excluding NMI) are disabled.

When the GEN bit is low, the NMI interrupt is active but cannot cause a wake up from STOP/WAIT modes.

This register is cleared on reset.

3.4.4 Interrupt sources

Interrupt sources available on the ST62E18C/T18C are summarized in the Table 10 with associated mask bit to enable/disable the interrupt request.

Table 10. Interrupt Requests and Mask Bits

Peripheral	Register	Address Register	Mask bit	Masked Interrupt Source	Interrupt source
GENERAL	IOR	C8h	GEN	All Interrupts, excluding NMI	All
TIMER	TSCR1	D4h	ETI	TMZ: TIMER Overflow	source 4
A/D CONVERTER	ADCR	D1h	EAI	EOC: End of Conversion	source 4
UART	UARTCR	D7h	RXIEN TXIEN	RXRDY: Byte received TXMT: Byte sent	source 4
ARTIMER	ARMC	E5h	OVIE CPIE EIE	OVF: ARTIMER Overflow CPF: Successful compare EF: Active edge on ARTIMin	source 3
SPI	SIDR	DCh	ALL	End of Transmission	source 1
Port PAn	ORPA-DRPA	C0h-C4h	ORPAn-DRPAn	PAn pin	source 1
Port PBn	ORPB-DRPB	C1h-C5h	ORPBn-DRPBn	PBn pin	source 2
Port PDn	ORPD-DRPD	C3h-C7h	ORPDn-DRPDn	PDn pin	source 2

INTERRUPTS (Cont'd)

Interrupt Polarity Register (IPR)

Address: DAh — Read/Write

7							0
-	-	-	-	PortD	-	PortA	PortB

In conjunction with I/O register ESB bit, the polarity of I/O pins triggered interrupts can be selected by setting accordingly the Interrupt Polarity Register (IPR). If a bit in IPR is set to one the corresponding port interrupt is inverted (e.g. IPR bit 2 = A; port C generates interrupt on rising edge. At reset, IPR is cleared and all port interrupts are not inverted (e.g. Port C generates interrupts on falling edges).

Bit 7 - Bit 4 = *Unused*.

Bit 3 = *Port D Interrupt Polarity*.

Bit 2 = Unused.

Bit 1= *Port A Interrupt Polarity*.

Bit 0 = *Port B Interrupt Polarity*.

Tables 11. I/O Interrupts selections according to IPR, IOR programming

GEN	IPR3	IPR0	IOR5	Port B occurrence	Port D occurrence	Interrupt source
1	0	0	0	falling edge	falling edge	2
1	0	0	1	rising edge	rising edge	
1	0	1	0	rising edge	falling edge	
1	0	1	1	falling edge	rising edge	
1	1	0	0	falling edge	rising edge	
1	1	0	1	rising edge	falling edge	
1	1	1	0	rising edge	rising edge	
1	1	1	1	falling edge	falling edge	
0	X	X	X	Disabled	Disabled	

GEN	IPR1	IOR6	Port A occurrence	Interrupt source
1	0	0	falling edge	1
1	0	1	low level	
1	1	0	rising edge	
1	1	1	high level	
0	X	X	Disabled	

INTERRUPTS (Cont'd)

Figure 21. Interrupt Block Diagram

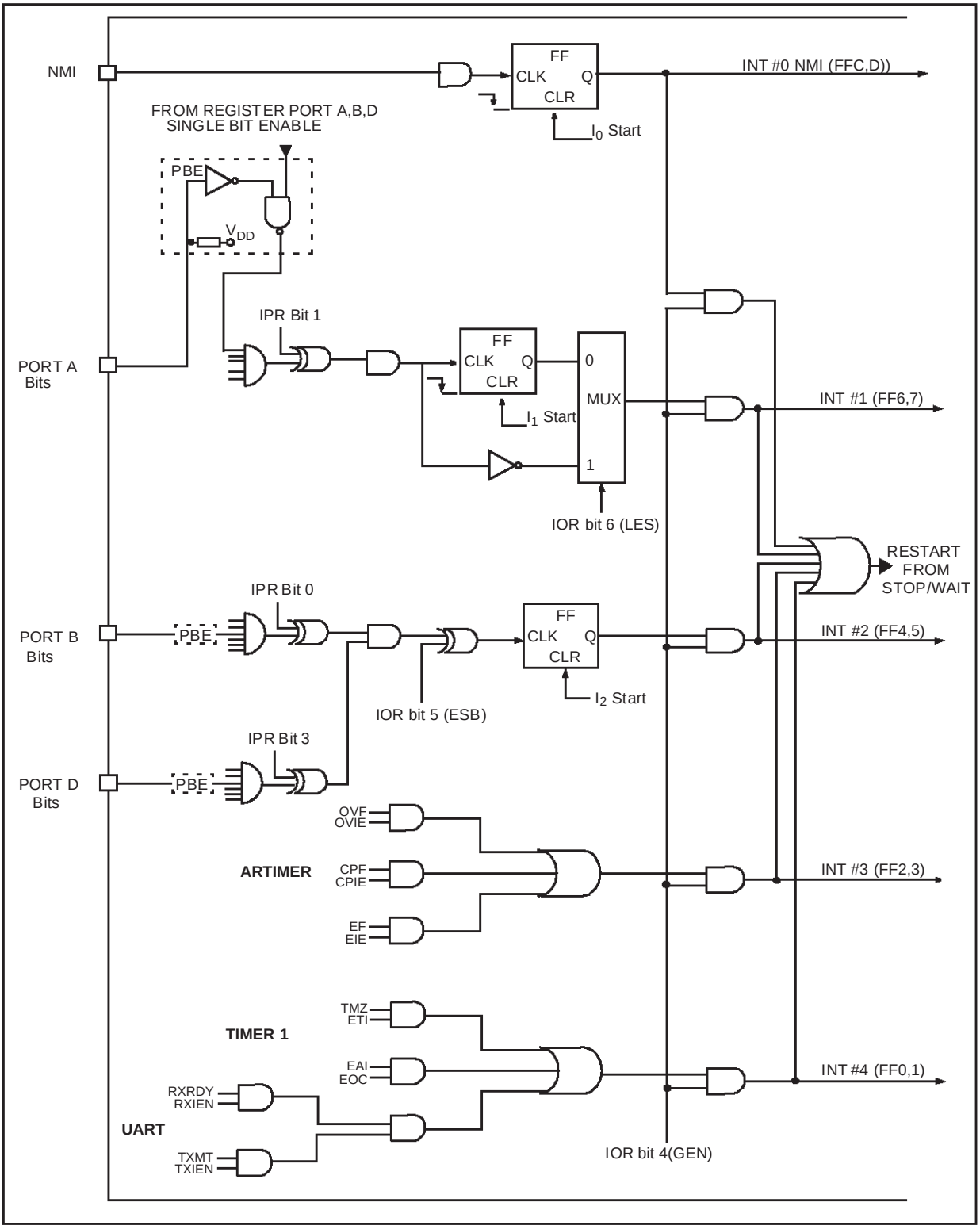

3.5 POWER SAVING MODES

The WAIT and STOP modes have been implemented in the ST62xx family of MCUs in order to reduce the product's electrical consumption during idle periods. These two power saving modes are described in the following paragraphs.

3.5.1 WAIT Mode

The MCU goes into WAIT mode as soon as the WAIT instruction is executed. The microcontroller can be considered as being in a "software frozen" state where the core stops processing the program instructions, the RAM contents and peripheral registers are preserved as long as the power supply voltage is higher than the RAM retention voltage. In this mode the peripherals are still active.

WAIT mode can be used when the user wants to reduce the MCU power consumption during idle periods, while not losing track of time or the capability of monitoring external events. The active oscillator is not stopped in order to provide a clock signal to the peripherals. Timer counting may be enabled as well as the Timer interrupt, before entering the WAIT mode: this allows the WAIT mode to be exited when a Timer interrupt occurs. The same applies to other peripherals which use the clock signal.

If the WAIT mode is exited due to a Reset (either by activating the external pin or generated by the Watchdog), the MCU enters a normal reset procedure. If an interrupt is generated during WAIT mode, the MCU's behaviour depends on the state of the processor core prior to the WAIT instruction, but also on the kind of interrupt request which is generated. This is described in the following paragraphs. The processor core does not generate a delay following the occurrence of the interrupt, because the oscillator clock is still available and no stabilisation period is necessary.

3.5.2 STOP Mode

If the Watchdog is disabled, STOP mode is available. When in STOP mode, the MCU is placed in the lowest power consumption mode. In this operating mode, the microcontroller can be considered as being "frozen", no instruction is executed, the oscillator is stopped, the RAM contents and peripheral registers are preserved as long as the power supply voltage is higher than the RAM retention voltage, and the ST62xx core waits for the occurrence of an external interrupt request or a Reset to exit the STOP state.

If the STOP state is exited due to a Reset (by activating the external pin) the MCU will enter a normal reset procedure. Behaviour in response to interrupts depends on the state of the processor core prior to issuing the STOP instruction, and also on the kind of interrupt request that is generated.

This case will be described in the following paragraphs. The processor core generates a delay after occurrence of the interrupt request, in order to wait for complete stabilisation of the oscillator, before executing the first instruction.

POWER SAVING MODE (Cont'd)

3.5.3 Exit from WAIT and STOP Modes

The following paragraphs describe how the MCU exits from WAIT and STOP modes, when an interrupt occurs (not a Reset). It should be noted that the restart sequence depends on the original state of the MCU (normal, interrupt or non-maskable interrupt mode) prior to entering WAIT or STOP mode, as well as on the interrupt type.

Interrupts do not affect the oscillator selection.

3.5.3.1 Normal Mode

If the MCU was in the main routine when the WAIT or STOP instruction was executed, exit from Stop or Wait mode will occur as soon as an interrupt occurs; the related interrupt routine is executed and, on completion, the instruction which follows the STOP or WAIT instruction is then executed, providing no other interrupts are pending.

3.5.3.2 Non Maskable Interrupt Mode

If the STOP or WAIT instruction has been executed during execution of the non-maskable interrupt routine, the MCU exits from the Stop or Wait mode as soon as an interrupt occurs: the instruction which follows the STOP or WAIT instruction is executed, and the MCU remains in non-maskable interrupt mode, even if another interrupt has been generated.

3.5.3.3 Normal Interrupt Mode

If the MCU was in interrupt mode before the STOP or WAIT instruction was executed, it exits from STOP or WAIT mode as soon as an interrupt occurs. Nevertheless, two cases must be considered:

– If the interrupt is a normal one, the interrupt routine in which the WAIT or STOP mode was entered will be completed, starting with the execution of the instruction which follows the STOP or the WAIT instruction, and the MCU is still in the interrupt mode. At the end of this routine pending interrupts will be serviced in accordance with their priority.

– In the event of a non-maskable interrupt, the non-maskable interrupt service routine is processed first, then the routine in which the WAIT or STOP mode was entered will be completed by executing the instruction following the STOP or WAIT instruction. The MCU remains in normal interrupt mode.

Notes:

To achieve the lowest power consumption during RUN or WAIT modes, the user program must take care of:

– configuring unused I/Os as inputs without pull-up (these should be externally tied to well defined logic levels);

– placing all peripherals in their power down modes before entering STOP mode;

When the hardware activated Watchdog is selected, or when the software Watchdog is enabled, the STOP instruction is disabled and a WAIT instruction will be executed in its place.

If all interrupt sources are disabled (GEN low), the MCU can only be restarted by a Reset. Although setting GEN low does not mask the NMI as an interrupt, it will stop it generating a wake-up signal.

The WAIT and STOP instructions are not executed if an enabled interrupt request is pending.

4 ON-CHIP PERIPHERALS

4.1 I/O PORTS

The MCU features Input/Output lines which may be individually programmed as any of the following input or output configurations:

– Input without pull-up or interrupt
– Input with pull-up and interrupt
– Input with pull-up, but without interrupt
– Analog input
– Push-pull output
– Open drain output

The lines are organised as bytewise Ports.

Each port is associated with 3 registers in Data space. Each bit of these registers is associated with a particular line (for instance, bits 0 of Port A Data, Direction and Option registers are associated with the PA0 line of Port A).

The DATA registers (DRx), are used to read the voltage level values of the lines which have been configured as inputs, or to write the logic value of the signal to be output on the lines configured as outputs. The port data registers can be read to get the effective logic levels of the pins, but they can be also written by user software, in conjunction with the related option registers, to select the different input mode options.

Single-bit operations on I/O registers are possible but care is necessary because reading in input mode is done from I/O pins while writing will directly affect the Port data register causing an undesired change of the input configuration.

The Data Direction registers (DDRx) allow the data direction (input or output) of each pin to be set.

The Option registers (ORx) are used to select the different port options available both in input and in output mode.

All I/O registers can be read or written to just as any other RAM location in Data space, so no extra RAM cells are needed for port data storage and manipulation. During MCU initialization, all I/O registers are cleared and the input mode with pull-ups and no interrupt generation is selected for all the pins, thus avoiding pin conflicts.

Figure 22. I/O Port Block Diagram

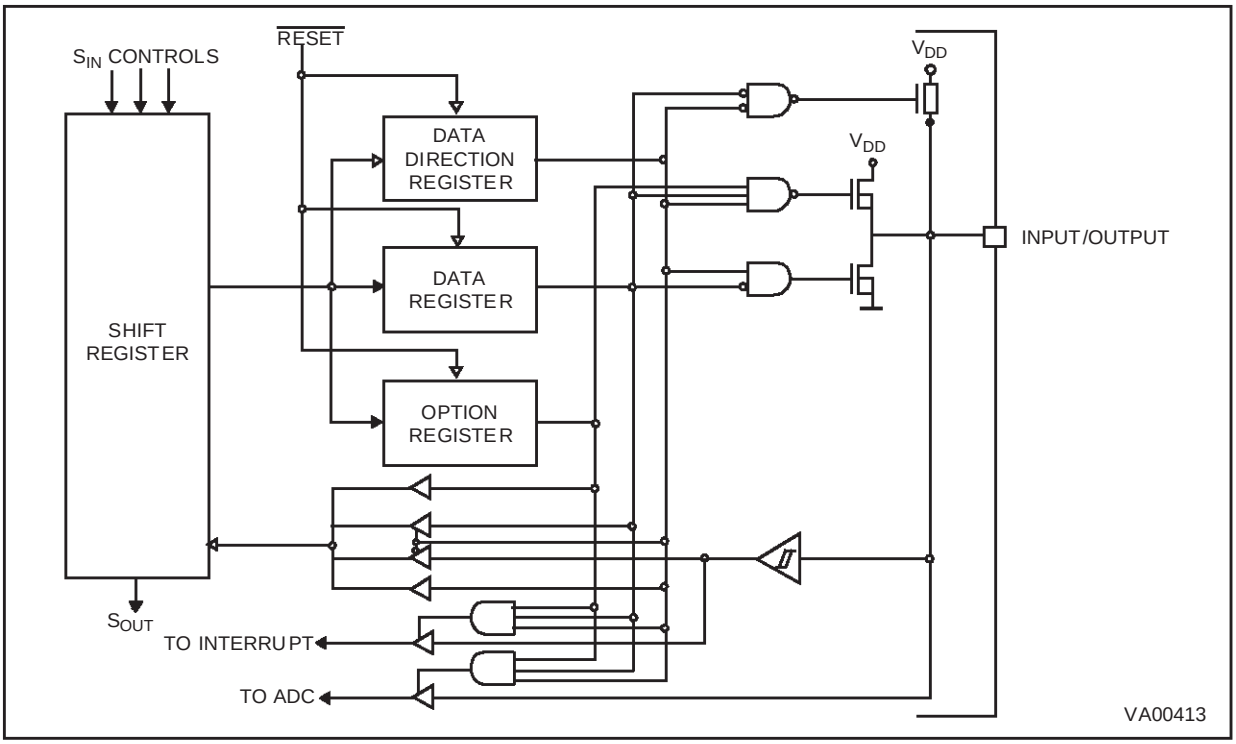

I/O PORTS (Cont'd)

4.1.1 Operating Modes

Each pin may be individually programmed as input or output with various configurations.

This is achieved by writing the relevant bit in the Data (DR), Data Direction (DDR) and Option registers (OR). Table 1 illustrates the various port configurations which can be selected by user software.

4.1.1.1 Input Options

Pull-up, High Impedance Option. All input lines can be individually programmed with or without an internal pull-up by programming the OR and DR registers accordingly. If the pull-up option is not selected, the input pin will be in the high-impedance state.

4.1.1.2 Interrupt Options

All input lines can be individually connected by software to the interrupt system by programming the OR and DR registers accordingly. The interrupt trigger modes (falling edge, rising edge and low level) can be configured by software as described in the Interrupt Chapter for each port.

4.1.1.3 Analog Input Options

Some pins can be configured as analog inputs by programming the OR and DR registers accordingly. These analog inputs are connected to the on-chip 8-bit Analog to Digital Converter. *ONLY ONE* pin should be programmed as an analog input at any time, since by selecting more than one input simultaneously their pins will be effectively shorted.

Table 12. I/O Port Option Selection

DDR	OR	DR	Mode	Option
0	0	0	Input	With pull-up, no interrupt
0	0	1	Input	No pull-up, no interrupt
0	1	0	Input	With pull-up and with interrupt
0	1	1	Input	Analog input (when available)
1	0	X	Output	Open-drain output (20mA sink when available)
1	1	X	Output	Push-pull output (20mA sink when available)

Note: X = Don't care

I/O PORTS (Cont'd)

4.1.2 Safe I/O State Switching Sequence

Switching the I/O ports from one state to another should be done in a sequence which ensures that no unwanted side effects can occur. The recommended safe transitions are illustrated in Figure 2. All other transitions are potentially risky and should be avoided when changing the I/O operating mode, as it is most likely that undesirable side-effects will be experienced, such as spurious interrupt generation or two pins shorted together by the analog multiplexer.

Single bit instructions (SET, RES, INC and DEC) should be used with great caution on Ports Data registers, since these instructions make an implicit read and write back of the entire register. In port input mode, however, the data register reads from the input pins directly, and not from the data register latches. Since data register information in input mode is used to set the characteristics of the input pin (interrupt, pull-up, analog input), these may be unintentionally reprogrammed depending on the state of the input pins. As a general rule, it is better to limit the use of single bit instructions on data registers to when the whole (8-bit) port is in output mode. In the case of inputs or of mixed inputs and outputs, it is advisable to keep a copy of the data register in RAM. Single bit instructions may then be used on the RAM copy, after which the whole copy register can be written to the port data register:

```
SET bit, datacopy
LD a, datacopy
LD DRA, a
```

Warning: Care must also be taken to not use instructions that act on a whole port register (INC, DEC, or read operations) when all 8 bits are not available on the device. Unavailable bits must be masked by software (AND instruction).

The WAIT and STOP instructions allow the ST62xx to be used in situations where low power consumption is needed. The lowest power consumption is achieved by configuring I/Os in input mode with well-defined logic levels.

The user must take care not to switch outputs with heavy loads during the conversion of one of the analog inputs in order to avoid any disturbance to the conversion.

Figure 23. Diagram showing Safe I/O State Transitions

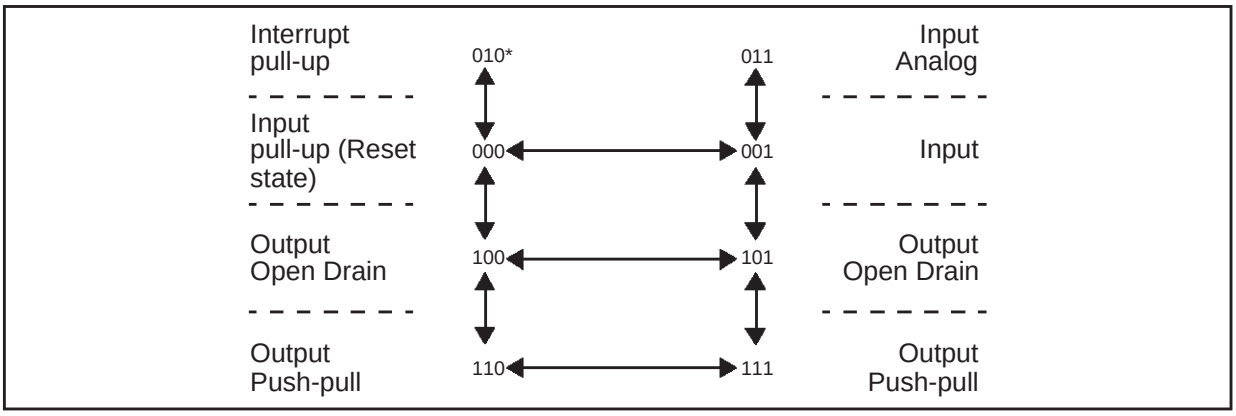

Note *. xxx = DDR, OR, DR Bits respectively

I/O PORTS (Cont'd)

Table 13. I/O Port configuration for the ST62T18C/E18C

MODE	AVAILABLE ON(1)	SCHEMATIC
Input (Reset state if PORT PULL option disabled)	PA1-PA5 PB4-PB6 PD4-PD7	Data in Interrupt
Input with pull up (Reset state if PORT PULL option enabled)	PA1-PA5 PB4-PB6 PD4-PD7	Data in Interrupt
Input with pull up with interrupt	PA1-PA5 PB4-PB6 PD4-PD7	Data in Interrupt
Analog Input	PA4-PA5 PB4-PB6 PD4-PD7	ADC
Open drain output 5mA Open drain output 20mA	PB4-PB6 PD4-PD7 PA1-PA5	Data out
Push-pull output 5mA Push-pull output 20mA	PB4-PB6 PD4-PD7 PA1-PA5	Data out VR01992A

Note 1. Provided the correct configuration has been selected.

I/O PORTS (Cont'd)

4.1.3 ARTimer alternate functions

When the PWMOE bit of ARMC register is low, the PA2/ARTIMout pin is configured as any standard pin of port B through the port registers.

PA2/ARTIMout pin must be configured as output push-pull through the DDR and OR registers to be used as PWM output. When the PWMOE bit is set, PA2/ARTIMout becomes the PWM output.

ARTIMin/PA3 is connected through the port registers as any standard pin of port B. To use PARTIMin/PA3 as AR Timer input, it must be configured as input through DDRB.

4.1.4 UART alternate functions

PD4/RXD1 pin must be configured as input through the DDR and OR registers to be used as reception line for the UART. All input modes are available and PD4 can be read independently of the UART at any time.

PD5/TXD1 pin must be configured as output through the DDR and OR registers to be used as transmission line for the UART. Value present on the pin in output mode is the Data register content as long as no transmission is active.

I/O PORTS (Cont'd)

Figure 24. Peripheral Interface Configuration of UART and AR Timer

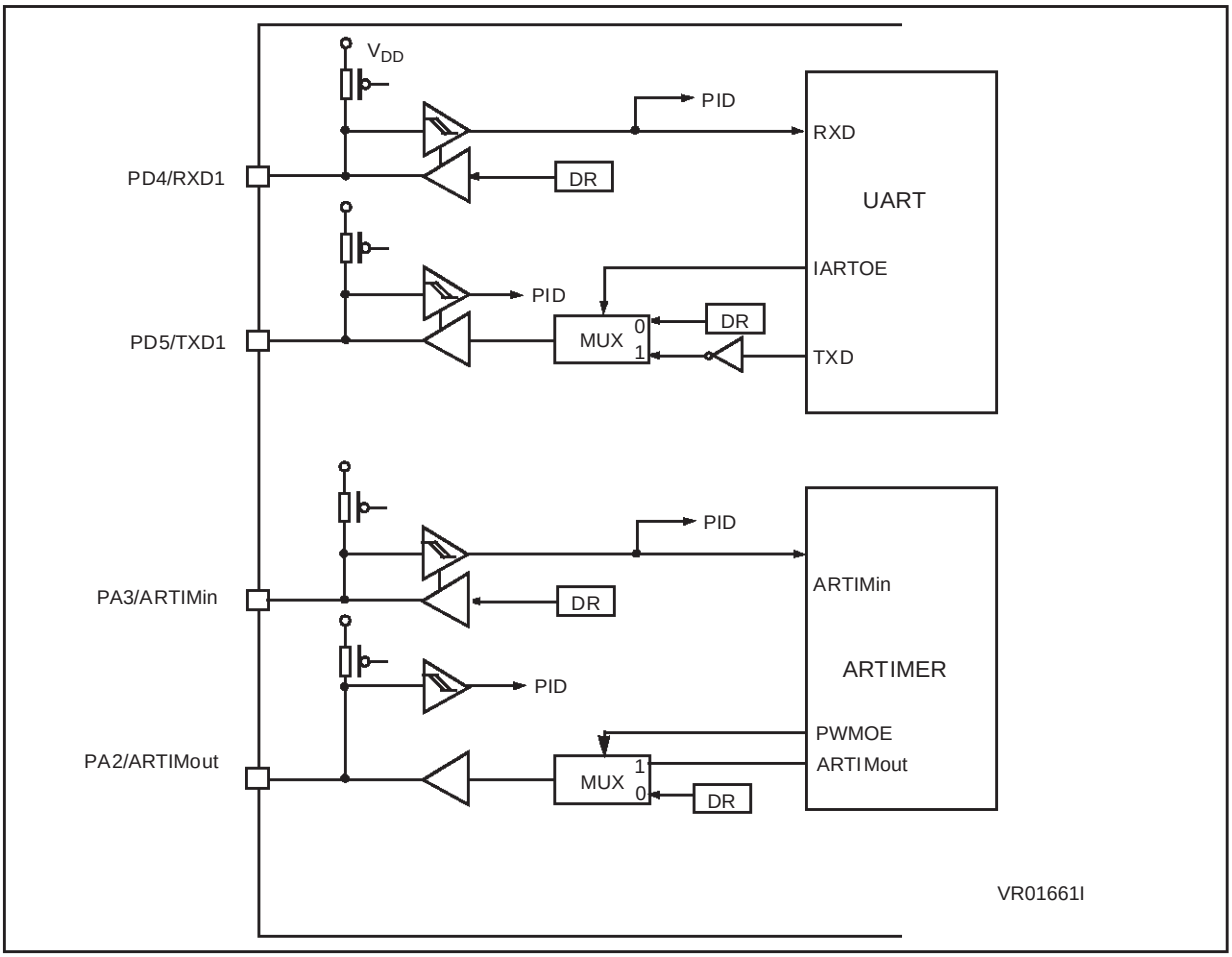

I/O PORTS (Cont'd)

4.1.5 I/O Port Option Registers

ORA/B/D (CCh PA, CDh PB, CFh PD)
Read/Write

7							0
Px7	Px6	Px5	Px4	Px3	Px2	Px1	Px0

Bit 7-0 = **Px7 - Px0**: *Port A, B, and D Option Register bits.*

4.1.6 I/O Port Data Direction Registers

DDRA/B/D (C4h PA, C5h PB, C7h PD)
Read/Write

7							0
Px7	Px6	Px5	Px4	Px3	Px2	Px1	Px0

Bit 7-0 = **Px7 - Px0**: *Port A, B, and D Data Direction Registers bits.*

4.1.7 I/O Port Data Registers

DRA/B/D (C0h PA, C1h PB, C3h PD)
Read/Write

7							0
Px7	Px6	Px5	Px4	Px3	Px2	Px1	Px0

Bit 7-0 = **Px7 - Px0**: *Port A, B, and D Data Registers bits.*

4.2 TIMER

The MCU features an on-chip Timer peripheral, consisting of an 8-bit counter with a 7-bit programmable prescaler, giving a maximum count of 2^{15}. The peripheral may be configured in three different operating modes.

Figure 25 shows the Timer Block Diagram. The external TIMER pin is available to the user. The content of the 8-bit counter can be read/written in the Timer/Counter register, TCR, while the state of the 7-bit prescaler can be read in the PSC register. The control logic device is managed in the TSCR register as described in the following paragraphs.

The 8-bit counter is decremented by the output (rising edge) coming from the 7-bit prescaler and can be loaded and read under program control. When it decrements to zero then the TMZ (Timer Zero) bit in the TSCR is set to “1”. If the ETI (Enable Timer Interrupt) bit in the TSCR is also set to “1”, an interrupt request is generated as described in the Interrupt Chapter. The Timer interrupt can be used to exit the MCU from WAIT mode.

The prescaler input can be the internal frequency f_{INT} divided by 12 or an external clock applied to the TIMER pin. The prescaler decrements on the rising edge. Depending on the division factor programmed by PS2, PS1 and PS0 bits in the TSCR. The clock input of the timer/counter register is multiplexed to different sources. For division factor 1, the clock input of the prescaler is also that of timer/counter; for factor 2, bit 0 of the prescaler register is connected to the clock input of TCR. This bit changes its state at half the frequency of the prescaler input clock. For factor 4, bit 1 of the PSC is connected to the clock input of TCR, and so forth. The prescaler initialize bit, PSI, in the TSCR register must be set to “1” to allow the prescaler (and hence the counter) to start. If it is cleared to “0”, all the prescaler bits are set to “1” and the counter is inhibited from counting. The prescaler can be loaded with any value between 0 and 7Fh, if bit PSI is set to “1”. The prescaler tap is selected by means of the PS2/PS1/PS0 bits in the control register.

Figure 26 illustrates the Timer’s working principle.

Figure 25. Timer Block Diagram

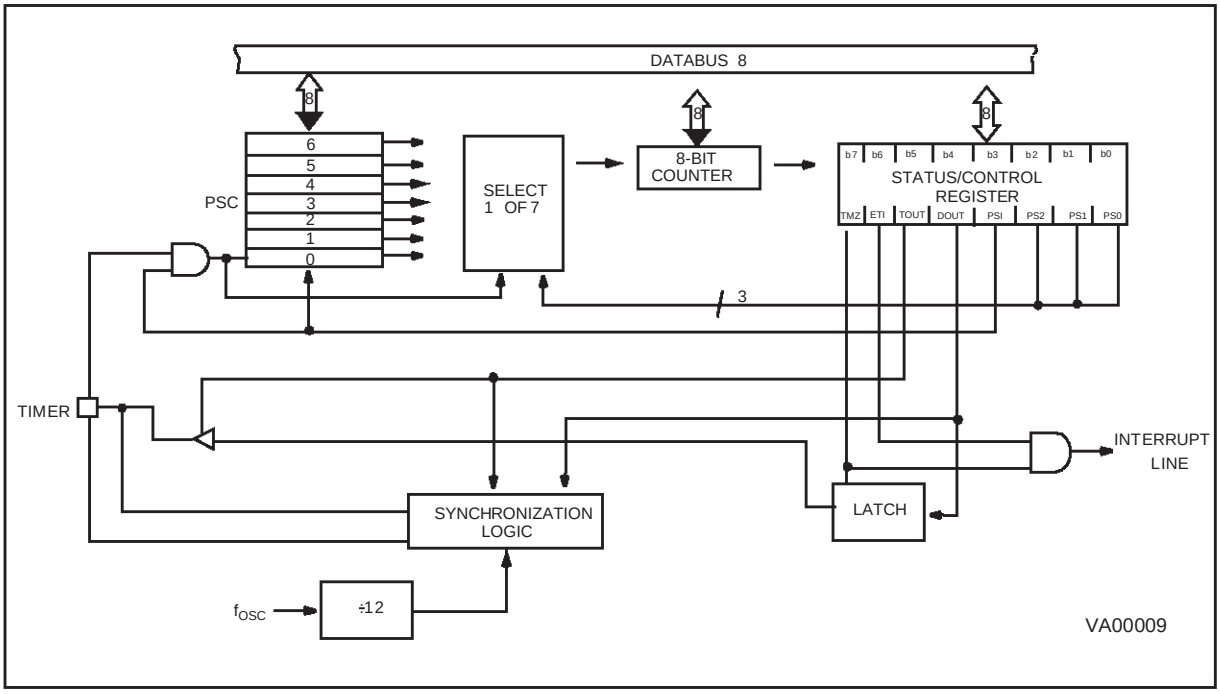

TIMER (Cont'd)

4.2.1 Timer Operating Modes

There are three operating modes, which are selected by the TOUT and DOUT bits (see TSCR register). These three modes correspond to the two clocks which can be connected to the 7-bit prescaler ($f_{INT} \div 12$ or TIMER pin signal), and to the output mode.

4.2.1.1 Gated Mode

(TOUT = "0", DOUT = "1")

In this mode the prescaler is decremented by the Timer clock input ($f_{INT} \div 12$), but ONLY when the signal on the TIMER pin is held high (allowing pulse width measurement). This mode is selected by clearing the TOUT bit in the TSCR register to "0" (i.e. as input) and setting the DOUT bit to "1".

4.2.1.2 Event Counter Mode

(TOUT = "0", DOUT = "0")

In this mode, the TIMER pin is the input clock of the prescaler which is decremented on the rising edge.

4.2.1.3 Output Mode

(TOUT = "1", DOUT = data out)

The TIMER pin is connected to the DOUT latch, hence the Timer prescaler is clocked by the prescaler clock input ($f_{INT} \div 12$).

The user can select the desired prescaler division ratio through the PS2, PS1, PS0 bits. When the TCR count reaches 0, it sets the TMZ bit in the TSCR. The TMZ bit can be tested under program control to perform a timer function whenever it goes high. The low-to-high TMZ bit transition is used to latch the DOUT bit of the TSCR and transfer it to the TIMER pin. This operating mode allows external signal generation on the TIMER pin.

Table 14. Timer Operating Modes

TOUT	DOUT	Timer Pin	Timer Function
0	0	Input	Event Counter
0	1	Input	Gated Input
1	0	Output	Output "0"
1	1	Output	Output "1"

4.2.2 Timer Interrupt

When the counter register decrements to zero with the ETI (Enable Timer Interrupt) bit set to one, an interrupt request is generated as described in the Interrupt Chapter. When the counter decrements to zero, the TMZ bit in the TSCR register is set to one.

Figure 26. Timer Working Principle

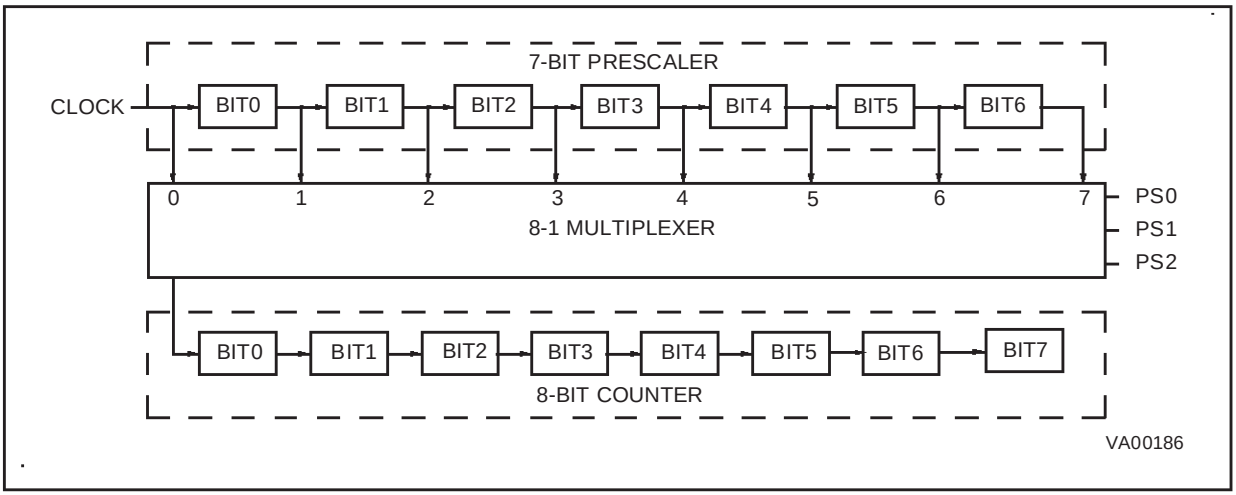

TIMER (Cont'd)

4.2.3 Application Notes

TMZ is set when the counter reaches zero; however, it may also be set by writing 00h in the TCR register or by setting bit 7 of the TSCR register. The TMZ bit must be cleared by user software when servicing the timer interrupt to avoid undesired interrupts when leaving the interrupt service routine. After reset, the 8-bit counter register is loaded with 0FFh, while the 7-bit prescaler is loaded with 07Fh, and the TSCR register is cleared. This means that the Timer is stopped (PSI="0") and the timer interrupt is disabled.

If the Timer is programmed in output mode, the DOUT bit is transferred to the TIMER pin when TMZ is set to one (by software or due to counter decrement). When TMZ is high, the latch is transparent and DOUT is copied to the timer pin. When TMZ goes low, DOUT is latched.

A write to the TCR register will predominate over the 8-bit counter decrement to 00h function, i.e. if a write and a TCR register decrement to 00h occur simultaneously, the write will take precedence, and the TMZ bit is not set until the 8-bit counter reaches 00h again. The values of the TCR and the PSC registers can be read accurately at any time.

4.2.4 Timer Registers

Timer Status Control Register (TSCR)

Address: 0D4h — Read/Write

7							0
TMZ	ETI	TOUT	DOUT	PSI	PS2	PS1	PS0

Bit 7 = **TMZ**: *Timer Zero bit*

A low-to-high transition indicates that the timer count register has decrement to zero. This bit must be cleared by user software before starting a new count.

Bit 6 = **ETI**: *Enable Timer Interrupt*

When set, enables the timer interrupt request. If ETI=0 the timer interrupt is disabled. If ETI=1 and TMZ=1 an interrupt request is generated.

Bit 5 = **TOUT**: *Timers Output Control*

When low, this bit selects the input mode for the TIMER pin. When high the output mode is selected.

Bit 4 = **DOUT**: *Data Output*

Data sent to the timer output when TMZ is set high (output mode only). Input mode selection (input mode only).

Bit 3 = **PSI**: *Prescaler Initialize Bit*

Used to initialize the prescaler and inhibit its counting. When PSI="0" the prescaler is set to 7Fh and the counter is inhibited. When PSI="1" the prescaler is enabled to count downwards. As long as PSI="0" both counter and prescaler are not running.

Bit 2, 1, 0 = **PS2, PS1, PS0**: *Prescaler Mux. Select.* These bits select the division ratio of the prescaler register.

Table 15. Prescaler Division Factors

PS2	PS1	PS0	Divided by
0	0	0	1
0	0	1	2
0	1	0	4
0	1	1	8
1	0	0	16
1	0	1	32
1	1	0	64
1	1	1	128

Timer Counter Register TCR

Address: 0D3h — Read/Write

7							0
D7	D6	D5	D4	D3	D2	D1	D0

Bit 7-0 = **D7-D0**: *Counter Bits.*

Prescaler Register PSC

Address: 0D2h — Read/Write

7							0
D7	D6	D5	D4	D3	D2	D1	D0

Bit 7 = **D7**: Always read as "0".

Bit 6-0 = **D6-D0**: Prescaler Bits.

4.3 AUTO-RELOAD TIMER

The Auto-Reload Timer (AR Timer) on-chip peripheral consists of an 8-bit timer/counter with compare and capture/reload capabilities and of a 7-bit prescaler with a clock multiplexer, enabling the clock input to be selected as f_{INT}, $f_{INT/3}$ or an external clock source. A Mode Control Register, ARMC, two Status Control Registers, ARSC0 and ARSC1, an output pin, ARTIMout, and an input pin, ARTIMin, allow the Auto-Reload Timer to be used in 4 modes:

– Auto-reload (PWM generation),

– Output compare and reload on external event (PLL),

– Input capture and output compare for time measurement.

– Input capture and output compare for period measurement.

The AR Timer can be used to wake the MCU from WAIT mode either with an internal or with an external clock. It also can be used to wake the MCU from STOP mode, if used with an external clock signal connected to the ARTIMin pin. A Load register allows the program to read and write the counter on the fly.

4.3.1 AR Timer Description

The AR COUNTER is an 8-bit up-counter incremented on the input clock's rising edge. The counter is loaded from the ReLoad/Capture Register, ARRC, for auto-reload or capture operations, as well as for initialization. Direct access to the AR counter is not possible; however, by reading or writing the ARLR load register, it is possible to read or write the counter's contents on the fly.

The AR Timer's input clock can be either the internal clock (from the Oscillator Divider), the internal clock divided by 3, or the clock signal connected to the ARTIMin pin. Selection between these clock sources is effected by suitably programming bits CC0-CC1 of the ARSC1 register. The output of the AR Multiplexer feeds the 7-bit programmable AR Prescaler, ARPSC, which selects one of the 8 available taps of the prescaler, as defined by PSC0-PSC2 in the AR Mode Control Register. Thus the division factor of the prescaler can be set to 2n (where n = 0, 1,..7).

The clock input to the AR counter is enabled by the TEN (Timer Enable) bit in the ARMC register. When TEN is reset, the AR counter is stopped and the prescaler and counter contents are frozen. When TEN is set, the AR counter runs at the rate of the selected clock source. The counter is cleared on system reset.

The AR counter may also be initialized by writing to the ARLR load register, which also causes an immediate copy of the value to be placed in the AR counter, regardless of whether the counter is running or not. Initialization of the counter, by either method, will also clear the ARPSC register, whereupon counting will start from a known value.

4.3.2 Timer Operating Modes

Four different operating modes are available for the AR Timer:

Auto-reload Mode with PWM Generation. This mode allows a Pulse Width Modulated signal to be generated on the ARTIMout pin with minimum Core processing overhead.

The free running 8-bit counter is fed by the prescaler's output, and is incremented on every rising edge of the clock signal.

When a counter overflow occurs, the counter is automatically reloaded with the contents of the Reload/Capture Register, ARCC, and ARTIMout is set. When the counter reaches the value contained in the compare register (ARCP), ARTIMout is reset.

On overflow, the OVF flag of the ARSC0 register is set and an overflow interrupt request is generated if the overflow interrupt enable bit, OVIE, in the Mode Control Register (ARMC), is set. The OVF flag must be reset by the user software.

When the counter reaches the compare value, the CPF flag of the ARSC0 register is set and a compare interrupt request is generated, if the Compare Interrupt enable bit, CPIE, in the Mode Control Register (ARMC), is set. The interrupt service routine may then adjust the PWM period by loading a new value into ARCP. The CPF flag must be reset by user software.

The PWM signal is generated on the ARTIMout pin (refer to the Block Diagram). The frequency of this signal is controlled by the prescaler setting and by the auto-reload value present in the Reload/Capture register, ARRC. The duty cycle of the PWM signal is controlled by the Compare Register, ARCP.

AUTO-RELOAD TIMER (Cont'd)

Figure 27. AR Timer Block Diagram

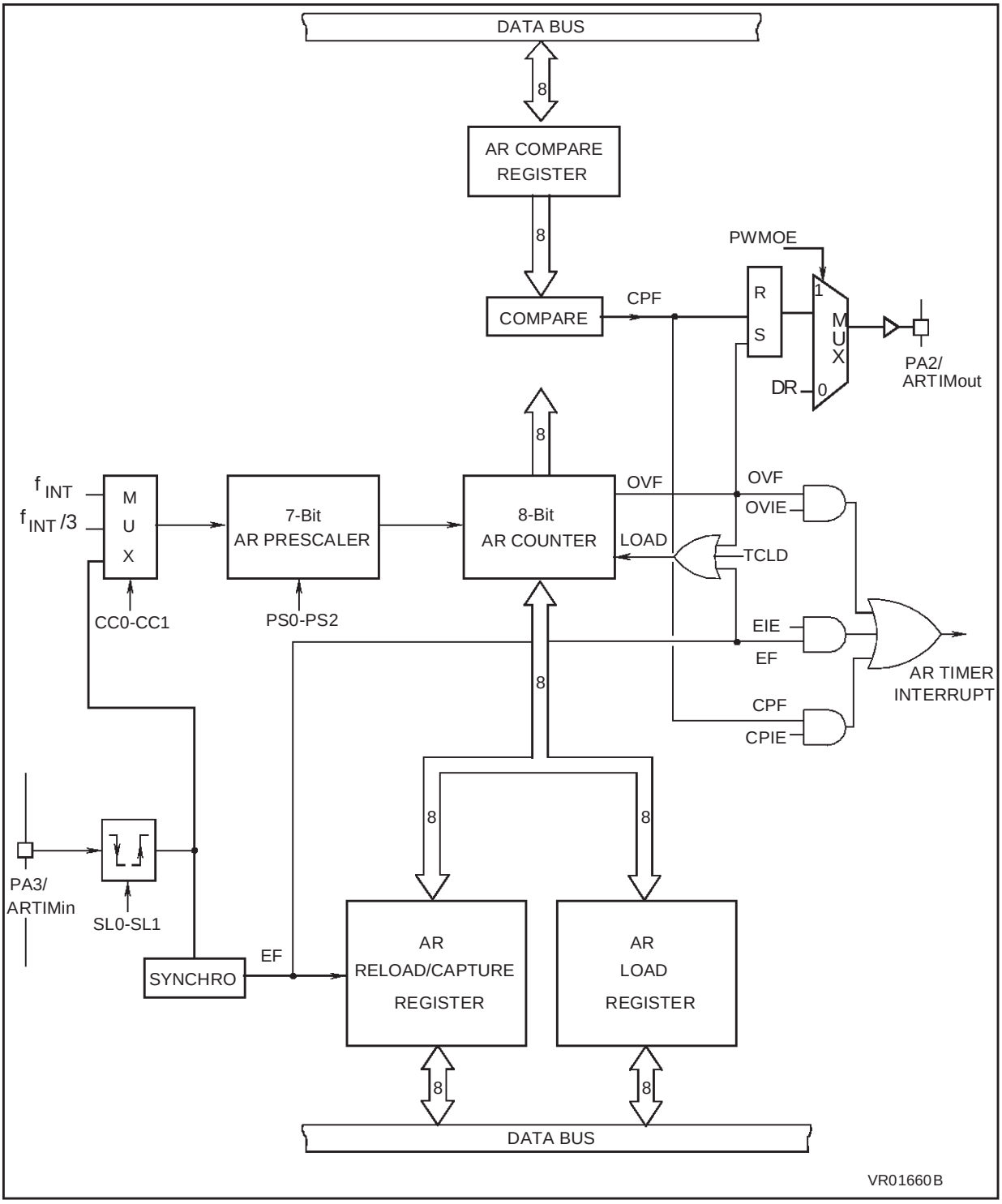

AUTO-RELOAD TIMER (Cont'd)

It should be noted that the reload values will also affect the value and the resolution of the duty cycle of PWM output signal. To obtain a signal on ARTIMout, the contents of the ARCP register must be greater than the contents of the ARRC register.

The maximum available resolution for the ARTIMout duty cycle is:

Resolution = 1/[255-(ARRC)]

Where ARRC is the content of the Reload/Capture register. The compare value loaded in the Compare Register, ARCP, must be in the range from (ARRC) to 255.

The ARTC counter is initialized by writing to the ARRC register and by then setting the TCLD (Timer Load) and the TEN (Timer Clock Enable) bits in the Mode Control register, ARMC.

Enabling and selection of the clock source is controlled by the CC0, CC1, SL0 and SL1 bits in the Status Control Register, ARSC1. The prescaler division ratio is selected by the PS0, PS1 and PS2 bits in the ARSC1 register.

In Auto-reload Mode, any of the three available clock sources can be selected: Internal Clock, Internal Clock divided by 3 or the clock signal present on the ARTIMin pin.

Figure 28. Auto-reload Timer PWM Function

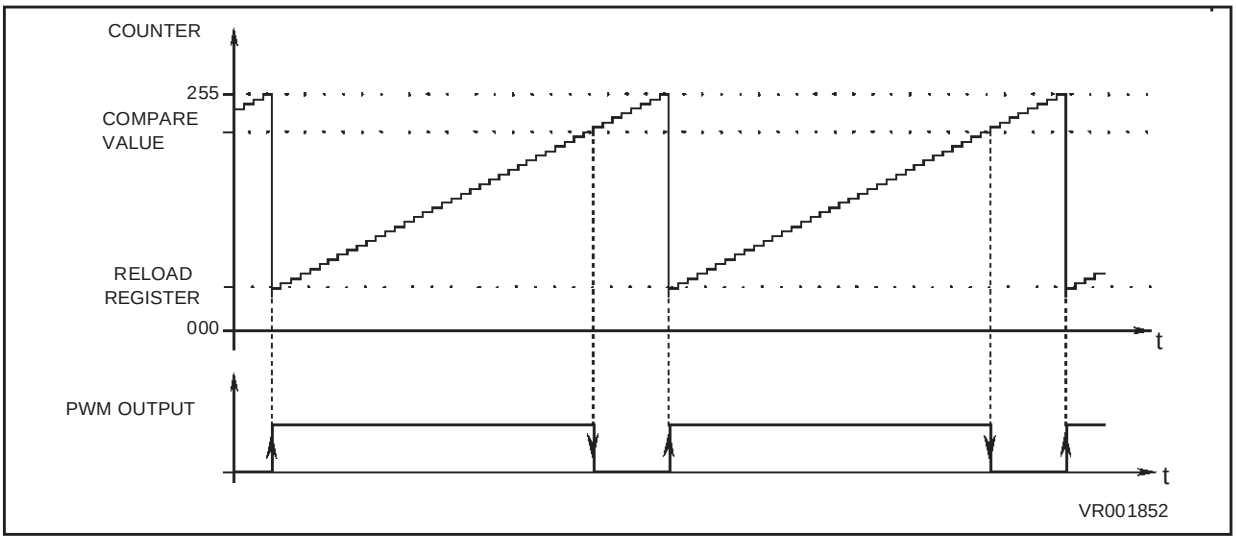

AUTO-RELOAD TIMER (Cont'd)

Capture Mode with PWM Generation. In this mode, the AR counter operates as a free running 8-bit counter fed by the prescaler output. The counter is incremented on every clock rising edge.

An 8-bit capture operation from the counter to the ARRC register is performed on every active edge on the ARTIMin pin, when enabled by Edge Control bits SL0, SL1 in the ARSC1 register. At the same time, the External Flag, EF, in the ARSC0 register is set and an external interrupt request is generated if the External Interrupt Enable bit, EIE, in the ARMC register, is set. The EF flag must be reset by user software.

Each ARTC overflow sets ARTIMout, while a match between the counter and ARCP (Compare Register) resets ARTIMout and sets the compare flag, CPF. A compare interrupt request is generated if the related compare interrupt enable bit, CPIE, is set. A PWM signal is generated on ARTIMout. The CPF flag must be reset by user software.

The frequency of the generated signal is determined by the prescaler setting. The duty cycle is determined by the ARCP register.

Initialization and reading of the counter are identical to the auto-reload mode (see previous description).

Enabling and selection of clock sources is controlled by the CC0 and CC1 bits in the AR Status Control Register, ARSC1.

The prescaler division ratio is selected by programming the PS0, PS1 and PS2 bits in the ARSC1 Register.

In Capture mode, the allowed clock sources are the internal clock and the internal clock divided by 3; the external ARTIMin input pin should not be used as a clock source.

Capture Mode with Reset of counter and prescaler, and PWM Generation. This mode is identical to the previous one, with the difference that a capture condition also resets the counter and the prescaler, thus allowing easy measurement of the time between two captures (for input period measurement on the ARTIMin pin).

Load on External Input. The counter operates as a free running 8-bit counter fed by the prescaler. the count is incremented on every clock rising edge.

Each counter overflow sets the ARTIMout pin. A match between the counter and ARCP (Compare Register) resets the ARTIMout pin and sets the compare flag, CPF. A compare interrupt request is generated if the related compare interrupt enable bit, CPIE, is set. A PWM signal is generated on ARTIMout. The CPF flag must be reset by user software.

Initialization of the counter is as described in the previous paragraph. In addition, if the external ARTIMin input is enabled, an active edge on the input pin will copy the contents of the ARRC register into the counter, whether the counter is running or not.

Notes:

The allowed AR Timer clock sources are the following:

AR Timer Mode	Clock Sources
Auto-reload mode	f_{INT}, $f_{INT/3}$, ARTIMin
Capture mode	f_{INT}, $f_{INT/3}$
Capture/Reset mode	f_{INT}, $f_{INT/3}$
External Load mode	f_{INT}, $f_{INT/3}$

The clock frequency should not be modified while the counter is counting, since the counter may be set to an unpredictable value. For instance, the multiplexer setting should not be modified while the counter is counting.

Loading of the counter by any means (by auto-reload, through ARLR, ARRC or by the Core) resets the prescaler at the same time.

Care should be taken when both the Capture interrupt and the Overflow interrupt are used. Capture and overflow are asynchronous. If the capture occurs when the Overflow Interrupt Flag, OVF, is high (between counter overflow and the flag being reset by software, in the interrupt routine), the External Interrupt Flag, EF, may be cleared simultaneusly without the interrupt being taken into account.

The solution consists in resetting the OVF flag by writing 06h in the ARSC0 register. The value of EF is not affected by this operation. If an interrupt has occured, it will be processed when the MCU exits from the interrupt routine (the second interrupt is latched).

AUTO-RELOAD TIMER (Cont'd)

4.3.3 AR Timer Registers

AR Mode Control Register (ARMC)

Address: E5h — Read/Write

Reset status: 00h

7							0
TCLD	TEN	PWMOE	EIE	CPIE	OVIE	ARMC1	ARMC0

The AR Mode Control Register ARMC is used to program the different operating modes of the AR Timer, to enable the clock and to initialize the counter. It can be read and written to by the Core and it is cleared on system reset (the AR Timer is disabled).

Bit 7 = **TLCD**: *Timer Load Bit.* This bit, when set, will cause the contents of ARRC register to be loaded into the counter and the contents of the prescaler register, ARPSC, are cleared in order to initialize the timer before starting to count. This bit is write-only and any attempt to read it will yield a logical zero.

Bit 6 = **TEN***: Timer Clock Enable.* This bit, when set, allows the timer to count. When cleared, it will stop the timer and freeze ARPSC and ARTSC.

Bit 5 = **PWMOE**: *PWM Output Enable.* This bit, when set, enables the PWM output on the ARTIMout pin. When reset, the PWM output is disabled.

Bit 4 = **EIE**: *External Interrupt Enable.* This bit, when set, enables the external interrupt request. When reset, the external interrupt request is masked. If EIE is set and the related flag, EF, in the ARSC0 register is also set, an interrupt request is generated.

Bit 3 = **CPIE**: *Compare Interrupt Enable.* This bit, when set, enables the compare interrupt request. If CPIE is reset, the compare interrupt request is masked. If CPIE is set and the related flag, CPF, in the ARSC0 register is also set, an interrupt request is generated.

Bit 2 = **OVIE**: *Overflow Interrupt.* This bit, when set, enables the overflow interrupt request. If OVIE is reset, the compare interrupt request is masked. If OVIE is set and the related flag, OVF in the ARSC0 register is also set, an interrupt request is generated.

Bit 1-0 = **ARMC1-ARMC0**: *Mode Control Bits 1-0.* These are the operating mode control bits. The following bit combinations will select the various operating modes:

ARMC1	ARMC0	Operating Mode
0	0	Auto-reload Mode
0	1	Capture Mode
1	0	Capture Mode with Reset of ARTC and ARPSC
1	1	Load on External Edge Mode

AR Timer Status/Control Registers ARSC0 & ARSC1. These registers contain the AR Timer status information bits and also allow the programming of clock sources, active edge and prescaler multiplexer setting.

ARSC0 register bits 0,1 and 2 contain the interrupt flags of the AR Timer. These bits are read normally. Each one may be reset by software. Writing a one does not affect the bit value.

AR Status Control Register 0 (ARSC0)

Address: E6h — Read/Clear

7							0
D7	D6	D5	D4	D3	EF	CPF	OVF

Bits 7-3 = **D7-D3**: *Unused*

Bit 2 = **EF**: *External Interrupt Flag.* This bit is set by any active edge on the external ARTIMin input pin. The flag is cleared by writing a zero to the EF bit.

Bit 1 = **CPF**: *Compare Interrupt Flag.* This bit is set if the contents of the counter and the ARCP register are equal. The flag is cleared by writing a zero to the CPF bit.

Bit 0 = **OVF**: *Overflow Interrupt Flag.* This bit is set by a transition of the counter from FFh to 00h (overflow). The flag is cleared by writing a zero to the OVF bit.

AUTO-RELOAD TIMER (Cont'd)

AR Status Control Register 1(ARSC1)

Address: E7h — Read/Write

7							0
PS2	PS1	PS0	D4	SL1	SL0	CC1	CC0

Bist 7-5 = **PS2-PS0**: *Prescaler Division Selection Bits 2-0.* These bits determine the Prescaler division ratio. The prescaler itself is not affected by these bits. The prescaler division ratio is listed in the following table:

Table 16. Prescaler Division Ratio Selection

PS2	PS1	PS0	ARPSC Division Ratio
0	0	0	1
0	0	1	2
0	1	0	4
0	1	1	8
1	0	0	16
1	0	1	32
1	1	0	64
1	1	1	128

Bit 4 = **D4**: *Reserved.* Must be kept reset.

Bit 3-2 = **SL1-SL0**: *Timer Input Edge Control Bits 1-0.* These bits control the edge function of the Timer input pin for external synchronization. If bit SL0 is reset, edge detection is disabled; if set edge detection is enabled. If bit SL1 is reset, the AR Timer input pin is rising edge sensitive; if set, it is falling edge sensitive.

SL1	SL0	Edge Detection
X	0	Disabled
0	1	Rising Edge
1	1	Falling Edge

Bit 1-0 = **CC1-CC0**: *Clock Source Select Bit 1-0.* These bits select the clock source for the AR Timer through the AR Multiplexer. The programming of the clock sources is explained in the following Table 3 :

Table 17. Clock Source Selection.

CC1	CC0	Clock Source
0	0	F_{int}
0	1	F_{int} Divided by 3
1	0	ARTIMin Input Clock
1	1	Reserved

AR Load Register ARLR. The ARLR load register is used to read or write the ARTC counter register "on the fly" (while it is counting). The ARLR register is not affected by system reset.

AR Load Register (ARLR)

Address: EBh — Read/Write

7							0
D7	D6	D5	D4	D3	D2	D1	D0

Bit 7-0 = **D7-D0**: *Load Register Data Bits.* These are the load register data bits.

AR Reload/Capture Register. The ARRC reload/capture register is used to hold the auto-reload value which is automatically loaded into the counter when overflow occurs.

AR Reload/Capture (ARRC)

Address: E9h — Read/Write

7							0
D7	D6	D5	D4	D3	D2	D1	D0

Bit 7-0 = **D7-D0**: *Reload/Capture Data Bits.* These are the Reload/Capture register data bits.

AR Compare Register. The CP compare register is used to hold the compare value for the compare function.

AR Compare Register (ARCP)

Address: EAh — Read/Write

7							0
D7	D6	D5	D4	D3	D2	D1	D0

Bit 7-0 = **D7-D0**: *Compare Data Bits.* These are the Compare register data bits.

4.4 A/D CONVERTER (ADC)

The A/D converter peripheral is an 8-bit analog to digital converter with analog inputs as alternate I/O functions (the number of which is device dependent), offering 8-bit resolution with a typical conversion time of 70us (at an oscillator clock frequency of 8MHz).

The ADC converts the input voltage by a process of successive approximations, using a clock frequency derived from the oscillator with a division factor of 12 or 6. After Reset, division by 12 is used by default to insure compatibility with other members of the ST62 MCU family. With an oscillator clock frequency less than 1.2MHz, conversion accuracy is decreased.

Selection of the input pin is done by configuring the related I/O line as an analog input via the Option and Data registers (refer to I/O ports description for additional information). Only one I/O line must be configured as an analog input at any time. The user must avoid any situation in which more than one I/O pin is selected as an analog input simultaneously, to avoid device malfunction.

The ADC uses two registers in the data space: the ADC data conversion register, ADR, which stores the conversion result, and the ADC control register, ADCR, used to program the ADC functions.

A conversion is started by writing a “1” to the Start bit (STA) in the ADC control register. This automatically clears (resets to “0”) the End Of Conversion Bit (EOC). When a conversion is complete, the EOC bit is automatically set to “1”, in order to flag that conversion is complete and that the data in the ADC data conversion register is valid. Each conversion has to be separately initiated by writing to the STA bit.

The STA bit is continuously scanned so that, if the user sets it to “1” while a previous conversion is in progress, a new conversion is started before completing the previous one. The start bit (STA) is a write only bit, any attempt to read it will show a logical “0”.

The A/D converter features a maskable interrupt associated with the end of conversion. This interrupt is associated with interrupt vector #4 and occurs when the EOC bit is set (i.e. when a conversion is completed). The interrupt is masked using the EAI (interrupt mask) bit in the control register.

The power consumption of the device can be reduced by turning off the ADC peripheral. This is done by setting the PDS bit in the ADC control register to “0”. If PDS=“1”, the A/D is powered and enabled for conversion. This bit must be set at least one instruction before the beginning of the conversion to allow stabilisation of the A/D converter. This action is also needed before entering WAIT mode, since the A/D comparator is not automatically disabled in WAIT mode.

During Reset, any conversion in progress is stopped, the control register is reset to 40h and the ADC interrupt is masked (EAI=0).

Figure 29. ADC Block Diagram

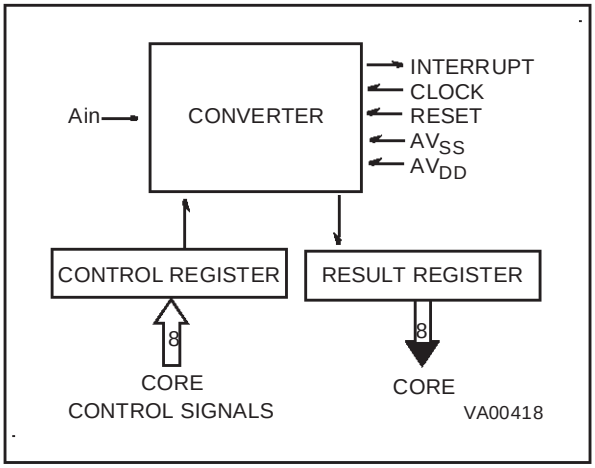

4.4.1 Application Notes

The A/D converter does not feature a sample and hold circuit. The analog voltage to be measured should therefore be stable during the entire conversion cycle. Voltage variation should not exceed ±1/2 LSB for the optimum conversion accuracy. A low pass filter may be used at the analog input pins to reduce input voltage variation during conversion.

When selected as an analog channel, the input pin is internally connected to a capacitor C_{ad} of typically 12pF. For maximum accuracy, this capacitor must be fully charged at the beginning of conversion. In the worst case, conversion starts one instruction (6.5 µs) after the channel has been selected. In worst case conditions, the impedance, ASI, of the analog voltage source is calculated using the following formula:

$$6.5\mu s = 9 \times C_{ad} \times ASI$$

(capacitor charged to over 99.9%), i.e. 30 kΩ including a 50% guardband. ASI can be higher if C_{ad} has been charged for a longer period by adding instructions before the start of conversion (adding more than 26 CPU cycles is pointless).

A/D CONVERTER (Cont'd)

Since the ADC is on the same chip as the microprocessor, the user should not switch heavily loaded output signals during conversion, if high precision is required. Such switching will affect the supply voltages used as analog references.

The accuracy of the conversion depends on the quality of the power supplies (V_{DD} and V_{SS}). The user must take special care to ensure a well regulated reference voltage is present on the V_{DD} and V_{SS} pins (power supply voltage variations must be less than 5V/ms). This implies, in particular, that a suitable decoupling capacitor is used at the V_{DD} pin.

The converter resolution is given by:

$$\frac{V_{DD} - V_{SS}}{256}$$

The Input voltage (Ain) which is to be converted must be constant for 1µs before conversion and remain constant during conversion.

Conversion resolution can be improved if the power supply voltage (V_{DD}) to the microcontroller is lowered.

In order to optimise conversion resolution, the user can configure the microcontroller in WAIT mode, because this mode minimises noise disturbances and power supply variations due to output switching. Nevertheless, the WAIT instruction should be executed as soon as possible after the beginning of the conversion, because execution of the WAIT instruction may cause a small variation of the V_{DD} voltage. The negative effect of this variation is minimized at the beginning of the conversion when the converter is less sensitive, rather than at the end of conversion, when the less significant bits are determined.

The best configuration, from an accuracy standpoint, is WAIT mode with the Timer stopped. Indeed, only the ADC peripheral and the oscillator are then still working. The MCU must be woken up from WAIT mode by the ADC interrupt at the end of the conversion. It should be noted that waking up the microcontroller could also be done using the Timer interrupt, but in this case the Timer will be working and the resulting noise could affect conversion accuracy.

One extra feature is available in the ADC to get a better accuracy. In fact, each ADC conversion has to be followed by a WAIT instruction to minimize the noise during the conversion. But the first conversion step is performed before the execution of the WAIT when most of clocks signals are still enabled . The key is to synchronize the ADC start with the effective execution of the WAIT. This is achieved by setting ADC SYNC option. This way, ADC conversion starts in effective WAIT for maximum accuracy.

Note: With this extra option, it is mandatory to execute WAIT instruction just after ADC start instruction. Insertion of any extra instruction may cause spurious interrupt request at ADC interrupt vector.

A/D Converter Control Register (ADCR)

Address: 0D1h — Read/Write

7							0
EAI	EOC	STA	PDS	CLSEL	OSC OFF	D1	D0

Bit 7 = **EAI**: *Enable A/D Interrupt.* If this bit is set to "1" the A/D interrupt is enabled, when EAI=0 the interrupt is disabled.

Bit 6 = **EOC**: *End of conversion. Read Only*. This read only bit indicates when a conversion has been completed. This bit is automatically reset to "0" when the STA bit is written. If the user is using the interrupt option then this bit can be used as an interrupt pending bit. Data in the data conversion register are valid only when this bit is set to "1".

Bit 5 = **STA***: Start of Conversion. Write Only*. Writing a "1" to this bit will start a conversion on the selected channel and automatically reset to "0" the EOC bit. If the bit is set again when a conversion is in progress, the present conversion is stopped and a new one will take place. This bit is write only, any attempt to read it will show a logical zero.

Bit 4 = **PDS***: Power Down Selection.* This bit activates the A/D converter if set to "1". Writing a "0" to this bit will put the ADC in power down mode (idle mode).

Bit 3= **CLSEL**: *Clock Selection*. When set, the ADC is driven by the MCU internal clock divided by 6, and typical conversion time at 8MHz is 35µs. When cleared (Reset state), MCU clock divided by 12 is used with a typical 70µs conversion time at 8MHz.

Bit 2 = **OSCOFF**. When low, this bit enables main oscillator to run. The main oscillator is switched off when OSCOFF is high.

Bit 1-0: Reserved. Must be kept cleared.

A/D Converter Data Register (ADR)

Address: 0D0h — Read only

7							0
D7	D6	D5	D4	D3	D2	D1	D0

Bit 7-0 = **D7-D0***: 8 Bit A/D Conversion Result.*

4.5 U. A. R. T. (Universal Asynchronous Receiver/Transmitter)

The UART provides the basic hardware for asynchronous serial communication which, combined with an appropriate software routine, gives a serial interface providing communication with common baud rates (up to 76,800 Baud with an 8MHz external oscillator) and flexible character formats.

Operating in Half-Duplex mode only, the UART uses a 10-bit frame or a 11-bit frame according to the choosen MCU option. Automatic parity bit generation is software selectable in the 10-bit character format allowing either 7 data bit + 1 parity bit, or 8 data bit transmission. Transmitted data is sent directly, while received data is buffered allowing further data characters to be received while the data is being read out of the receive buffer register. Data transmit has priority over data being received.

The UART is supplied with an MCU internal clock that is also available in WAIT mode of the processor.

4.5.1 Ports Interfacing

RXD reception line and TXD emission line are sharing the same external pins as two I/O lines. Therefore, UART configuration requires to set these two I/O lines through the relevant ports registers. The I/O line common with RXD line must be defined as input mode (with or without pull-up) while the I/O line common with TXD line must be defined as output mode (Push-pull or open drain). In the 11-bit character format option, the transmitted data is inverted and can therefore use a single transistor buffering stage. Defined as input, the RXD line can be read at any time as an I/O line during the UART operation. The TXD pin follows I/O port registers value when UARTOE bit is cleared, which means when no serial transmission is in progress. As a consequence, a permanent high level has to be written onto the I/O port in order to achieve a proper stop condition on the TXD line when no transmission is active.

Figure 30. UART Block Diagram

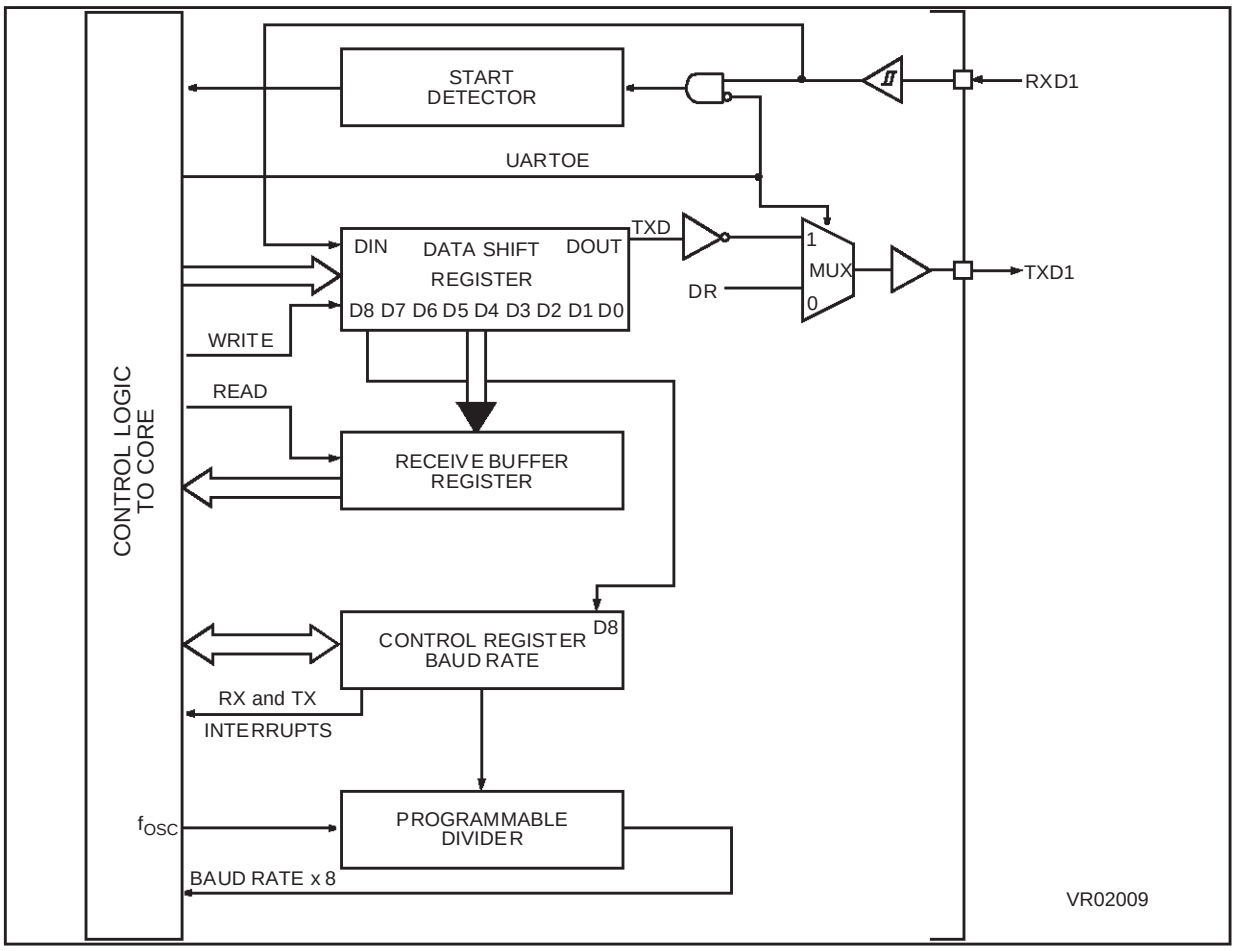

U. A. R. T (Cont'd)

4.5.2 Clock Generation

The UART contains a built-in divider of the MCU internal clock for most common Baud Rates as shown in Table 19. Other baud rate values can be calculated from the chosen oscillator frequency divided by the Divisor value shown.

The divided clock provides a frequency that is 8 times the desired baud rate. This allows the Data reception mechanism to provide a 2 to 1 majority voting system to determine the logic state of the asynchronous incoming serial logic bit by taking 3 timed samples within the 8 time states.

The bits not sampled provide a buffer to compensate for frequency offsets between sender and receiver.

4.5.3 Data Transmission

Whatever the format selected as MCU option, 10-bit or 11-bit frame, the start and stop bit are automatically generated by the UART. Only the remaining 8 (Resp. 9) bit in the 10-bit (Resp. 11-bit) frame are under control of the user.

Transmission is started by writing the Data Register, after having previously set the transmission software options, the baudrate and the parity enable. In case of 11-bit frame, the 9th bit must then be set before into the LSB of the UART Control Register. Bit 9 remains in the state programmed for consecutive transmissions until changed by the user or until a character is received when the state of this bit is changed to that of the incoming bit 9.

The UARTOE signal switches the output multiplexer to the UART output and a start bit is sent (a 0 for one bit time) followed by the data bit with the LSB D0 at first.. The output is then set to 1 for a period of one bit time to generate a Stop bit, and then the UARTOE signal returns the TXD1 line to its alternate I/O function. The end of transmission is flagged by setting TXMT to 1 and an interrupt is generated if enabled. The TXMT flag is reset by writing a 0 to the bit position, it is also cleared automatically when a new character is written to the Data Register. TXMT can be set to 1 by software to generate a software interrupt so care must be taken in manipulating the Control Register.

4.5.3.1 Character Format

Once the MCU option is set as 10-bit or 11-bit frame, the frame length is fixed. Within these 8 or 9 remaining bit, any format can be used as shown in the Table 18. Only the even parity automatic computation in the 10-bit frame is available. Any other parity bit can however be software computed and processed as a data bit

Table 18. Character Options

10 bit frame			
Start Bit	8 Data	No Parity	1 Stop
Start Bit	7 Data	1 Even Parity (Auto)	1 Stop
Start Bit	7 Data	1 Software Parity	1 Stop
11 bit frame			
Start Bit	8 Data	1 Software Parity	1 Stop
Start Bit	9 Data	No Parity	1 Stop
Start Bit	8 Data	No Parity	2 Stop
Start Bit	7 Data	1 Software Parity	2 Stop

Figure 31. 11-bit Character Format Example

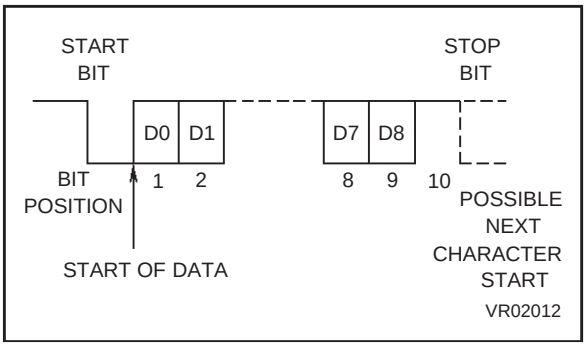

Figure 32. UART Data Output

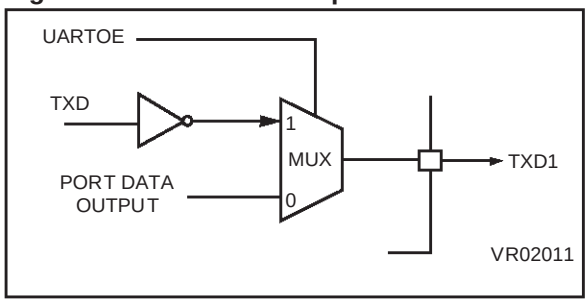

U. A. R. T (Cont'd)

4.5.4 Data Reception

The UART continuously looks for a falling edge on the input pin whenever a transmission is not active. Once an edge is detected it waits 1 bit time (8 states) to accommodate the Start bit, and then assembles the following serial data stream into the data register. First 8 bit are stored into the UART Data Register, while the additionnal 9th bit is stored into the LSB of the UART Control Register in case of the 11-bit frame MCU option has been selected. When the 10-bit frame option is selected, the parity of the 8 received bit is automatically written into the LSB of the UART Control Register (PTYEN bit).

After all bit have been received, the Receiver waits for the duration of one bit (for the Stop bit) and then transfers the received data into the buffer register, allowing a following character to be received. The interrupt flag RXRDY is set to 1 as the data is transferred to the buffer register and, if enabled, will generate an interrupt.

Figure 33. Data Sampling Points

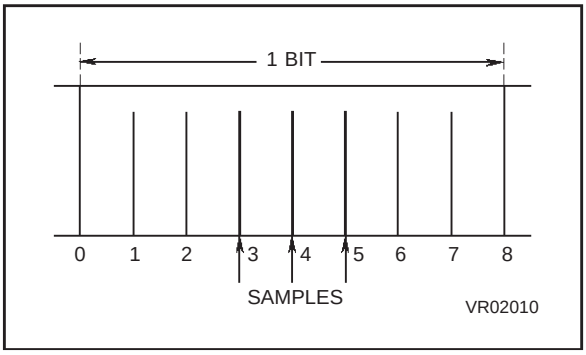

If a transmission is started during the course of a reception, the transmission takes priority and the reception is stopped to free the resources for the transmission. This implies that a handshaking system must be implemented, as polling of the UART to detect reception is not available.

4.5.5 Interrupt Capabilities

Both reception and transmission processes can induce interrupt to the core as defined in the interrupt section. These interrupts are enabled by setting TXIEN and RXIEN bit in the UARTCR register, and TXMT and RXRDY flags are set accordingly to the interrupt source.

4.5.6 Registers

UART Data Register (UARTDR)

Address: D6h, Read/Write

7							0
D7	D6	D5	D4	D3	D2	D1	D0

Bit7-Bit0. *UART data bits*. A write to this register loads the data into the transmit shift register and triggers the start of transmission. In addition this resets the transmit interrupt flag TXMT. A read of this register returns the data from the Receive buffer. If the automatic even parity computation is set (Bit PTYEN set), D7 must be cleared to 0 before transmission. Only the 7 LSB D0..D6 contain the data to be sent.

Warning. No Read/Write Instructions may be used with this register as both transmit and receive share the same address

Table 19. Baudrate Selection

BR2	BR1	BR0	f_{INT} Division	Baud Rate	
				f_{INT} = 8MHz	f_{INT} = 4MHz
0	0	0	6.656	1200	600
0	0	1	3.328	2400	1200
0	1	0	1.664	4800	2400
0	1	1	832	9600	4800
1	0	0	416	19200	9600
1	0	1	256	31200	15600
1	1	0	208	38400	19200
1	1	1	104	76800	38400

U. A. R. T (Cont'd)

UART Control Register (UARTCR)

Address: D7h, Read/Write

7							0
RXRDY	TXMT	RXIEN	TXIEN	BR2	BR1	BR0	PTYEN

Bit 7 = **RXRDY.** *Receiver Ready*. This flag becomes active as soon as a complete byte has been received and copied into the receive buffer. It may be cleared by writing a zero to it. Writing a one is possible. If the interrupt enable bit RXIEN is set to one, a software interrupt will be generated.

Bit 6 = **TXMT.** *Transmitter Empty*. This flag becomes active as soon as a complete byte has been sent. It may be cleared by writing a zero to it. It is automatically cleared by the action of writing a data value into the UART data register.

Bit 5 = **RXIEN.** *Receive Interrupt Enable*. When this bit is set to 1, the receive interrupt is enabled. Writing to RXIEN does not affect the status of the interrupt flag RXRDY.

Bit 4 = **TXIEN.** *Transmit Interrupt Enable*. When this bit is set to 1, the transmit interrupt is enabled. Writing to TXIEN does not affect the status of the interrupt flag TXRDY.

Bit 3-1= **BR2..BR0**. *Baudrate select*. These bits select the operating baud rate of the UART, depending on the frequency of fOSC. Care should be taken not to change these bits during communication as writing to these bits has an immediate effect.

Bit 0 = **PTYEN**. *Parity/Data Bit 8*. The function of this bit depens on the MCU option set. In 11-bit frame mode, it is the 9th bit of the trasmitted/received character. In 10-bit frame mode, writing a 1 enables the automatic even parity computation, while a read instruction after reception gives the parity of the whole 8 bit word received. For the even parity, a 0 value means no parity error.

Note: As the PTYEN bit is modified in reception, it must be to set to 1 before transmission if a reception occured in between.

5 SOFTWARE

5.1 ST6 ARCHITECTURE

The ST6 software has been designed to fully use the hardware in the most efficient way possible while keeping byte usage to a minimum; in short, to provide byte efficient programming capability. The ST6 core has the ability to set or clear any register or RAM location bit of the Data space with a single instruction. Furthermore, the program may branch to a selected address depending on the status of any bit of the Data space. The carry bit is stored with the value of the bit when the SET or RES instruction is processed.

5.2 ADDRESSING MODES

The ST6 core offers nine addressing modes, which are described in the following paragraphs. Three different address spaces are available: Program space, Data space, and Stack space. Program space contains the instructions which are to be executed, plus the data for immediate mode instructions. Data space contains the Accumulator, the X,Y,V and W registers, peripheral and Input/Output registers, the RAM locations and Data ROM locations (for storage of tables and constants). Stack space contains six 12-bit RAM cells used to stack the return addresses for subroutines and interrupts.

Immediate. In the immediate addressing mode, the operand of the instruction follows the opcode location. As the operand is a ROM byte, the immediate addressing mode is used to access constants which do not change during program execution (e.g., a constant used to initialize a loop counter).

Direct. In the direct addressing mode, the address of the byte which is processed by the instruction is stored in the location which follows the opcode. Direct addressing allows the user to directly address the 256 bytes in Data Space memory with a single two-byte instruction.

Short Direct. The core can address the four RAM registers X,Y,V,W (locations 80h, 81h, 82h, 83h) in the short-direct addressing mode. In this case, the instruction is only one byte and the selection of the location to be processed is contained in the opcode. Short direct addressing is a subset of the direct addressing mode. (Note that 80h and 81h are also indirect registers).

Extended. In the extended addressing mode, the 12-bit address needed to define the instruction is obtained by concatenating the four less significant bits of the opcode with the byte following the opcode. The instructions (JP, CALL) which use the extended addressing mode are able to branch to any address of the 4K bytes Program space.

An extended addressing mode instruction is two-byte long.

Program Counter Relative. The relative addressing mode is only used in conditional branch instructions. The instruction is used to perform a test and, if the condition is true, a branch with a span of -15 to +16 locations around the address of the relative instruction. If the condition is not true, the instruction which follows the relative instruction is executed. The relative addressing mode instruction is one-byte long. The opcode is obtained in adding the three most significant bits which characterize the kind of the test, one bit which determines whether the branch is a forward (when it is 0) or backward (when it is 1) branch and the four less significant bits which give the span of the branch (0h to Fh) which must be added or subtracted to the address of the relative instruction to obtain the address of the branch.

Bit Direct. In the bit direct addressing mode, the bit to be set or cleared is part of the opcode, and the byte following the opcode points to the address of the byte in which the specified bit must be set or cleared. Thus, any bit in the 256 locations of Data space memory can be set or cleared.

Bit Test & Branch. The bit test and branch addressing mode is a combination of direct addressing and relative addressing. The bit test and branch instruction is three-byte long. The bit identification and the tested condition are included in the opcode byte. The address of the byte to be tested follows immediately the opcode in the Program space. The third byte is the jump displacement, which is in the range of -127 to +128. This displacement can be determined using a label, which is converted by the assembler.

Indirect. In the indirect addressing mode, the byte processed by the register-indirect instruction is at the address pointed by the content of one of the indirect registers, X or Y (80h,81h). The indirect register is selected by the bit 4 of the opcode. A register indirect instruction is one byte long.

Inherent. In the inherent addressing mode, all the information necessary to execute the instruction is contained in the opcode. These instructions are one byte long.

5.3 INSTRUCTION SET

The ST6 core offers a set of 40 basic instructions which, when combined with nine addressing modes, yield 244 usable opcodes. They can be divided into six different types: load/store, arithmetic/logic, conditional branch, control instructions, jump/call, and bit manipulation. The following paragraphs describe the different types.

All the instructions belonging to a given type are presented in individual tables.

Load & Store. These instructions use one, two or three bytes in relation with the addressing mode. One operand is the Accumulator for LOAD and the other operand is obtained from data memory using one of the addressing modes.

For Load Immediate one operand can be any of the 256 data space bytes while the other is always immediate data.

Table 20. Load & Store Instructions

Instruction	Addressing Mode	Bytes	Cycles	Flags	
				Z	C
LD A, X	Short Direct	1	4	Δ	*
LD A, Y	Short Direct	1	4	Δ	*
LD A, V	Short Direct	1	4	Δ	*
LD A, W	Short Direct	1	4	Δ	*
LD X, A	Short Direct	1	4	Δ	*
LD Y, A	Short Direct	1	4	Δ	*
LD V, A	Short Direct	1	4	Δ	*
LD W, A	Short Direct	1	4	Δ	*
LD A, rr	Direct	2	4	Δ	*
LD rr, A	Direct	2	4	Δ	*
LD A, (X)	Indirect	1	4	Δ	*
LD A, (Y)	Indirect	1	4	Δ	*
LD (X), A	Indirect	1	4	Δ	*
LD (Y), A	Indirect	1	4	Δ	*
LDI A, #N	Immediate	2	4	Δ	*
LDI rr, #N	Immediate	3	4	*	*

Notes:

X,Y. Indirect Register Pointers, V & W Short Direct Registers
. Immediate data (stored in ROM memory)
rr. Data space register
Δ. Affected
* . Not Affected

INSTRUCTION SET (Cont'd)

Arithmetic and Logic. These instructions are used to perform the arithmetic calculations and logic operations. In AND, ADD, CP, SUB instructions one operand is always the accumulator while the other can be either a data space memory content or an immediate value in relation with the addressing mode. In CLR, DEC, INC instructions the operand can be any of the 256 data space addresses. In COM, RLC, SLA the operand is always the accumulator.

Table 21. Arithmetic & Logic Instructions

Instruction	Addressing Mode	Bytes	Cycles	Flags	
				Z	C
ADD A, (X)	Indirect	1	4	Δ	Δ
ADD A, (Y)	Indirect	1	4	Δ	Δ
ADD A, rr	Direct	2	4	Δ	Δ
ADDI A, #N	Immediate	2	4	Δ	Δ
AND A, (X)	Indirect	1	4	Δ	Δ
AND A, (Y)	Indirect	1	4	Δ	Δ
AND A, rr	Direct	2	4	Δ	Δ
ANDI A, #N	Immediate	2	4	Δ	Δ
CLR A	Short Direct	2	4	Δ	Δ
CLR r	Direct	3	4	*	*
COM A	Inherent	1	4	Δ	Δ
CP A, (X)	Indirect	1	4	Δ	Δ
CP A, (Y)	Indirect	1	4	Δ	Δ
CP A, rr	Direct	2	4	Δ	Δ
CPI A, #N	Immediate	2	4	Δ	Δ
DEC X	Short Direct	1	4	Δ	*
DEC Y	Short Direct	1	4	Δ	*
DEC V	Short Direct	1	4	Δ	*
DEC W	Short Direct	1	4	Δ	*
DEC A	Direct	2	4	Δ	*
DEC rr	Direct	2	4	Δ	*
DEC (X)	Indirect	1	4	Δ	*
DEC (Y)	Indirect	1	4	Δ	*
INC X	Short Direct	1	4	Δ	*
INC Y	Short Direct	1	4	Δ	*
INC V	Short Direct	1	4	Δ	*
INC W	Short Direct	1	4	Δ	*
INC A	Direct	2	4	Δ	*
INC rr	Direct	2	4	Δ	*
INC (X)	Indirect	1	4	Δ	*
INC (Y)	Indirect	1	4	Δ	*
RLC A	Inherent	1	4	Δ	Δ
SLA A	Inherent	2	4	Δ	Δ
SUB A, (X)	Indirect	1	4	Δ	Δ
SUB A, (Y)	Indirect	1	4	Δ	Δ
SUB A, rr	Direct	2	4	Δ	Δ
SUBI A, #N	Immediate	2	4	Δ	Δ

Notes:
X,Y.Indirect Register Pointers, V & W Short Direct RegistersD. Affected
. Immediate data (stored in ROM memory)* . Not Affected
rr. Data space register

INSTRUCTION SET (Cont'd)

Conditional Branch. The branch instructions achieve a branch in the program when the selected condition is met.

Bit Manipulation Instructions. These instructions can handle any bit in data space memory. One group either sets or clears. The other group (see Conditional Branch) performs the bit test branch operations.

Control Instructions. The control instructions control the MCU operations during program execution.

Jump and Call. These two instructions are used to perform long (12-bit) jumps or subroutines call inside the whole program space.

Table 22. Conditional Branch Instructions

Instruction	Branch If	Bytes	Cycles	Flags	
				Z	C
JRC e	C = 1	1	2	*	*
JRNC e	C = 0	1	2	*	*
JRZ e	Z = 1	1	2	*	*
JRNZ e	Z = 0	1	2	*	*
JRR b, rr, ee	Bit = 0	3	5	*	Δ
JRS b, rr, ee	Bit = 1	3	5	*	Δ

Notes:
b. 3-bit address
e. 5 bit signed displacement in the range -15 to +16<F128M>
ee. 8 bit signed displacement in the range -126 to +129
rr. Data space register
Δ . Affected. The tested bit is shifted into carry.
* . Not Affected

Table 23. Bit Manipulation Instructions

Instruction	Addressing Mode	Bytes	Cycles	Flags	
				Z	C
SET b,rr	Bit Direct	2	4	*	*
RES b,rr	Bit Direct	2	4	*	*

Notes:
b. 3-bit address;
rr. Data space register;
* . Not<M> Affected

Table 24. Control Instructions

Instruction	Addressing Mode	Bytes	Cycles	Flags	
				Z	C
NOP	Inherent	1	2	*	*
RET	Inherent	1	2	*	*
RETI	Inherent	1	2	Δ	Δ
STOP (1)	Inherent	1	2	*	*
WAIT	Inherent	1	2	*	*

Notes:
1. This instruction is deactivated<N>and a WAIT is automatically executed instead of a STOP if the watchdog function is selected.
Δ . Affected
*. Not Affected

Table 25. Jump & Call Instructions

Instruction	Addressing Mode	Bytes	Cycles	Flags	
				Z	C
CALL abc	Extended	2	4	*	*
JP abc	Extended	2	4	*	*

Notes:
abc. 12-bit address;
* . Not Affected

Opcode Map Summary. The following table contains an opcode map for the instructions used by the ST6

LOW / HI	0 0000	1 0001	2 0010	3 0011	4 0100	5 0101	6 0110	7 0111	LOW / HI
0 0000	2 JRNZ e 1 pcr	4 CALL abc 2 ext	2 JRNC e 1 pcr	5 JRR b0,rr,ee 3 bt	2 JRZ e 1 pcr	# 1 sd	2 JRC e 1 prc	4 LD a,(x) 1 ind	**0 0000**
1 0001	2 JRNZ e 1 pcr	4 CALL abc 2 ext	2 JRNC e 1 pcr	5 JRS b0,rr,ee 3 bt	2 JRZ e 1 pcr	4 INC x 1 sd	2 JRC e 1 prc	4 LDI a,nn 2 imm	**1 0001**
2 0010	2 JRNZ e 1 pcr	4 CALL abc 2 ext	2 JRNC e 1 pcr	5 JRR b4,rr,ee 3 bt	2 JRZ e 1 pcr	# 1 sd	2 JRC e 1 prc	4 CP a,(x) 1 ind	**2 0010**
3 0011	2 JRNZ e 1 pcr	4 CALL abc 2 ext	2 JRNC e 1 pcr	5 JRS b4,rr,ee 3 bt	2 JRZ e 1 pcr	4 LD a,x 1 sd	2 JRC e 1 prc	4 CPI a,nn 2 imm	**3 0011**
4 0100	2 JRNZ e 1 pcr	4 CALL abc 2 ext	2 JRNC e 1 pcr	5 JRR b2,rr,ee 3 bt	2 JRZ e 1 pcr	# 1 sd	2 JRC e 1 prc	4 ADD a,(x) 1 ind	**4 0100**
5 0101	2 JRNZ e 1 pcr	4 CALL abc 2 ext	2 JRNC e 1 pcr	5 JRS b2,rr,ee 3 bt	2 JRZ e 1 pcr	4 INC y 1 sd	2 JRC e 1 prc	4 ADDI a,nn 2 imm	**5 0101**
6 0110	2 JRNZ e 1 pcr	4 CALL abc 2 ext	2 JRNC e 1 pcr	5 JRR b6,rr,ee 3 bt	2 JRZ e 1 pcr	# 1 sd	2 JRC e 1 prc	4 INC (x) 1 ind	**6 0110**
7 0111	2 JRNZ e 1 pcr	4 CALL abc 2 ext	2 JRNC e 1 pcr	5 JRS b6,rr,ee 3 bt	2 JRZ e 1 pcr	4 LD a,y 1 sd	2 JRC e 1 prc	#	**7 0111**
8 1000	2 JRNZ e 1 pcr	4 CALL abc 2 ext	2 JRNC e 1 pcr	5 JRR b1,rr,ee 3 bt	2 JRZ e 1 pcr	# 1 sd	2 JRC e 1 prc	4 LD (x),a 1 ind	**8 1000**
9 1001	2 RNZ e 1 pcr	4 CALL abc 2 ext	2 JRNC e 1 pcr	5 JRS b1,rr,ee 3 bt	2 JRZ e 1 pcr	4 INC v 1 sd	2 JRC e 1 prc	#	**9 1001**
A 1010	2 JRNZ e 1 pcr	4 CALL abc 2 ext	2 JRNC e 1 pcr	5 JRR b5,rr,ee 3 bt	2 JRZ e 1 pcr	# 1 sd	2 JRC e 1 prc	4 AND a,(x) 1 ind	**A 1010**
B 1011	2 JRNZ e 1 pcr	4 CALL abc 2 ext	2 JRNC e 1 pcr	5 JRS b5,rr,ee 3 bt	2 JRZ e 1 pcr	4 LD a,v 1 sd	2 JRC e 1 prc	4 ANDI a,nn 2 imm	**B 1011**
C 1100	2 JRNZ e 1 pcr	4 CALL abc 2 ext	2 JRNC e 1 pcr	5 JRR b3,rr,ee 3 bt	2 JRZ e 1 pcr	# 1 sd	2 JRC e 1 prc	4 SUB a,(x) 1 ind	**C 1100**
D 1101	2 JRNZ e 1 pcr	4 CALL abc 2 ext	2 JRNC e 1 pcr	5 JRS b3,rr,ee 3 bt	2 JRZ e 1 pcr	4 INC w 1 sd	2 JRC e 1 prc	4 SUBI a,nn 2 imm	**D 1101**
E 1110	2 JRNZ e 1 pcr	4 CALL abc 2 ext	2 JRNC e 1 pcr	5 JRR b7,rr,ee 3 bt	2 JRZ e 1 pcr	# 1 sd	2 JRC e 1 prc	4 DEC (x) 1 ind	**E 1110**
F 1111	2 JRNZ e 1 pcr	4 CALL abc 2 ext	2 JRNC e 1 pcr	5 JRS b7,rr,ee 3 bt	2 JRZ e 1 pcr	4 LD a,w 1 sd	2 JRC e 1 prc	#	**F 1111**

Abbreviations for Addressing Modes:

dir	Direct
sd	Short Direct
imm	Immediate
inh	Inherent
ext	Extended
b.d	Bit Direct
bt	Bit Test
pcr	Program Counter Relative
ind	Indirect

Legend:

#	Indicates Illegal Instructions
e	5 Bit Displacement
b	3 Bit Address
rr	1byte dataspace address
nn	1 byte immediate data
abc	12 bit address
ee	8 bit Displacement

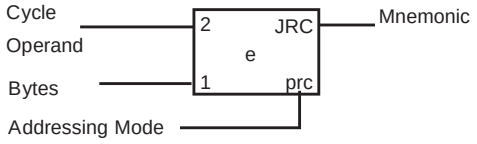

Opcode Map Summary (Continued)

LOW / HI	8 1000	9 1001	A 1010	B 1011	C 1100	D 1101	E 1110	F 1111	LOW / HI
0 **0000**	2 JRNZ e 1 pcr	4 JP abc 2 ext	2 JRNC e 1 pcr	4 RES b0,rr 2 b.d	2 JRZ e 1 pcr	4 LDI rr,nn 3 imm	2 JRC e 1 prc	4 LD a,(y) 1 ind	**0** **0000**
1 **0001**	2 JRNZ e 1 pcr	4 JP abc 2 ext	2 JRNC e 1 pcr	4 SET b0,rr 2 b.d	2 JRZ e 1 pcr	4 DEC x 1 sd	2 JRC e 1 prc	4 LD a,rr 2 dir	**1** **0001**
2 **0010**	2 JRNZ e 1 pcr	4 JP abc 2 ext	2 JRNC e 1 pcr	4 RES b4,rr 2 b.d	2 JRZ e 1 pcr	4 COM a	2 JRC e 1 prc	4 CP a,(y) 1 ind	**2** **0010**
3 **0011**	2 JRNZ e 1 pcr	4 JP abc 2 ext	2 JRNC e 1 pcr	4 SET b4,rr 2 b.d	2 JRZ e 1 pcr	4 LD x,a 1 sd	2 JRC e 1 prc	4 CP a,rr 2 dir	**3** **0011**
4 **0100**	2 JRNZ e 1 pcr	4 JP abc 2 ext	2 JRNC e 1 pcr	4 RES b2,rr 2 b.d	2 JRZ e 1 pcr	2 RETI 1 inh	2 JRC e 1 prc	4 ADD a,(y) 1 ind	**4** **0100**
5 **0101**	2 JRNZ e 1 pcr	4 JP abc 2 ext	2 JRNC e 1 pcr	4 SET b2,rr 2 b.d	2 JRZ e 1 pcr	4 DEC y 1 sd	2 JRC e 1 prc	4 ADD a,rr 2 dir	**5** **0101**
6 **0110**	2 JRNZ e 1 pcr	4 JP abc 2 ext	2 JRNC e 1 pcr	4 RES b6,rr 2 b.d	2 JRZ e 1 pcr	2 STOP 1 inh	2 JRC e 1 prc	4 INC (y) 1 ind	**6** **0110**
7 **0111**	2 JRNZ e 1 pcr	4 JP abc 2 ext	2 JRNC e 1 pcr	4 SET b6,rr 2 b.d	2 JRZ e 1 pcr	4 LD y,a 1 sd	2 JRC e 1 prc	4 INC rr 2 dir	**7** **0111**
8 **1000**	2 JRNZ e 1 pcr	4 JP abc 2 ext	2 JRNC e 1 pcr	4 RES b1,rr 2 b.d	2 JRZ e 1 pcr	#	2 JRC e 1 prc	4 LD (y),a 1 ind	**8** **1000**
9 **1001**	2 RNZ e 1 pcr	4 JP abc 2 ext	2 JRNC e 1 pcr	4 SET b1,rr 2 b.d	2 JRZ e 1 pcr	4 DEC v 1 sd	2 JRC e 1 prc	4 LD rr,a 2 dir	**9** **1001**
A **1010**	2 JRNZ e 1 pcr	4 JP abc 2 ext	2 JRNC e 1 pcr	4 RES b5,rr 2 b.d	2 JRZ e 1 pcr	4 RCL a 1 inh	2 JRC e 1 prc	4 AND a,(y) 1 ind	**A** **1010**
B **1011**	2 JRNZ e 1 pcr	4 JP abc 2 ext	2 JRNC e 1 pcr	4 SET b5,rr 2 b.d	2 JRZ e 1 pcr	4 LD v,a 1 sd	2 JRC e 1 prc	4 AND a,rr 2 dir	**B** **1011**
C **1100**	2 JRNZ e 1 pcr	4 JP abc 2 ext	2 JRNC e 1 pcr	4 RES b3,rr 2 b.d	2 JRZ e 1 pcr	2 RET 1 inh	2 JRC e 1 prc	4 SUB a,(y) 1 ind	**C** **1100**
D **1101**	2 JRNZ e 1 pcr	4 JP abc 2 ext	2 JRNC e 1 pcr	4 SET b3,rr 2 b.d	2 JRZ e 1 pcr	4 DEC w 1 sd	2 JRC e 1 prc	4 SUB a,rr 2 dir	**D** **1101**
E **1110**	2 JRNZ e 1 pcr	4 JP abc 2 ext	2 JRNC e 1 pcr	4 RES b7,rr 2 b.d	2 JRZ e 1 pcr	2 WAIT 1 inh	2 JRC e 1 prc	4 DEC (y) 1 ind	**E** **1110**
F **1111**	2 JRNZ e 1 pcr	4 JP abc 2 ext	2 JRNC e 1 pcr	4 SET b7,rr 2 b.d	2 JRZ e 1 pcr	4 LD w,a 1 sd	2 JRC e 1 prc	4 DEC rr 2 dir	**F** **1111**

Abbreviations for Addressing Modes:

dir	Direct
sd	Short Direct
imm	Immediate
inh	Inherent
ext	Extended
b.d	Bit Direct
bt	Bit Test
pcr	Program Counter Relative
ind	Indirect

Legend:

#	Indicates Illegal Instructions
e	5 Bit Displacement
b	3 Bit Address
rr	1byte dataspace address
nn	1 byte immediate data
abc	12 bit address
ee	8 bit Displacement

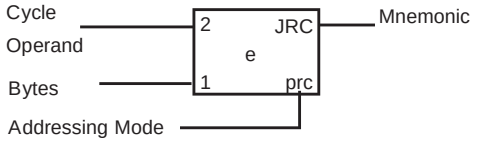

6 ELECTRICAL CHARACTERISTICS

6.1 ABSOLUTE MAXIMUM RATINGS

This product contains devices to protect the inputs against damage due to high static voltages, however it is advisable to take normal precaution to avoid application of any voltage higher than the specified maximum rated voltages.

For proper operation it is recommended that V_I and V_O be higher than V_{SS} and lower than V_{DD}. Reliability is enhanced if unused inputs are connected to an appropriate logic voltage level (V_{DD} or V_{SS}).

Power Considerations.The average chip-junction temperature, Tj, in Celsius can be obtained from:

Tj=TA + PD x RthJA

Where:TA = Ambient Temperature.

RthJA =Package thermal resistance (junction-to ambient).

PD = Pint + Pport.

Pint =IDD x VDD (chip internal power).

Pport =Port power dissipation (determined by the user).

Symbol	Parameter	Value	Unit
V_{DD}	Supply Voltage	-0.3 to 7.0	V
V_I	Input Voltage	V_{SS} - 0.3 to V_{DD} + 0.3(1)	V
V_O	Output Voltage	V_{SS} - 0.3 to V_{DD} + 0.3(1)	V
IV_{DD}	Total Current into V_{DD} (source)	80	mA
IV_{SS}	Total Current out of V_{SS} (sink)	100	mA
Tj	Junction Temperature	150	°C
T_{STG}	Storage Temperature	-60 to 150	°C

Notes:

- Stresses above those listed as “absolute maximum ratings” may cause permanent damage to the device. This is a stress rating only and functional operation of the device at these conditions is not implied. Exposure to maximum rating conditions for extended periods may affect device reliability.
- (1) Within these limits, clamping diodes are guarantee to be not conductive. Voltages outside these limits are authorised as long as injection current is kept within the specification.

6.2 RECOMMENDED OPERATING CONDITIONS

Symbol	Parameter	Test Conditions	Value			Unit
			Min.	Typ.	Max.	
T_A	Operating Temperature	6 Suffix Version 1 Suffix Version 3 Suffix Version	-40 0 -40		85 70 125	°C
V_{DD}	Operating Supply Voltage	f_{OSC} = 4MHz, 1 & 6 Suffix f_{OSC} = 4MHz, 3 Suffix fosc= 8MHz , 1 & 6 Suffix fosc= 8MHz , 3 Suffix	3.0 3.0 3.6 4.5		6.0 6.0 6.0 6.0	V
f_{OSC}	Oscillator Frequency[2)]	V_{DD} = 3.0V, 1 & 6 Suffix V_{DD} = 3.0V , 3 Suffix V_{DD} = 3.6V , 1 & 6 Suffix V_{DD} = 3.6V , 3 Suffix	0 0 0 0		4.0 4.0 8.0 4.0	MHz
I_{INJ+}	Pin Injection Current (positive)	V_{DD} = 4.5 to 5.5V			+5	mA
I_{INJ-}	Pin Injection Current (negative)	V_{DD} = 4.5 to 5.5V			-5	mA

Notes:

1. Care must be taken in case of negative current injection, where adapted impedance must be respected on analog sources to not affect the A/D conversion. For a -1mA injection, a maximum 10 KΩ is recommended.
2. An oscillator frequency above 1MHz is recommended for reliable A/D results

Figure 34. Maximum Operating FREQUENCY (Fmax) Versus SUPPLY VOLTAGE (V_{DD})

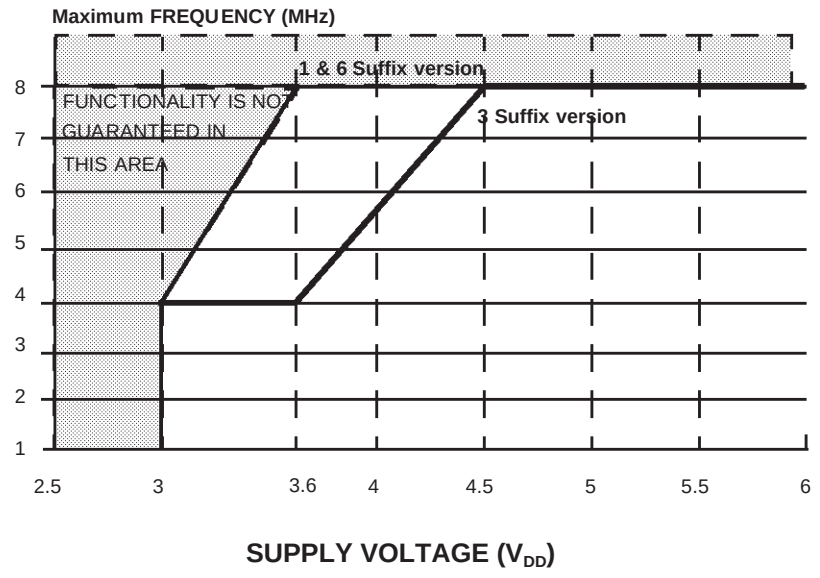

The shaded area is outside the recommended operating range; device functionality is not guaranteed under these conditions.

6.3 DC ELECTRICAL CHARACTERISTICS

(T_A = -40 to +125°C unless otherwise specified)

Symbol	Parameter	Test Conditions	Value			Unit
			Min.	Typ.	Max.	
V_{IL}	Input Low Level Voltage All Input pins				V_{DD} x 0.3	V
V_{IH}	Input High Level Voltage All Input pins		V_{DD} x 0.7			V
V_{Hys}	Hysteresis Voltage (1) All Input pins	V_{DD}= 5V V_{DD}= 3V	0.2 0.2			V
V_{up}	LVD Threshold in power-on			4.1	4.3	
V_{dn}	LVD threshold in powerdown		3.5	3.8		
V_{OL}	Low Level Output Voltage All Output pins	V_{DD}= 5.0V; I_{OL} = +10µA V_{DD}= 5.0V; I_{OL} = + 3mA			0.1 0.8	V
	Low Level Output Voltage 20 mA Sink I/O pins	V_{DD}= 5.0V; I_{OL} = +10µA V_{DD}= 5.0V; I_{OL} = +7mA V_{DD}= 5.0V; I_{OL} = +15mA			0.1 0.8 1.3	
V_{OH}	High Level Output Voltage All Output pins	V_{DD}= 5.0V; I_{OH} = -10µA V_{DD}= 5.0V; I_{OH} = -3.0mA	4.9 3.5			V
R_{PU}	Pull-up Resistance	All Input pins	40	100	350	KΩ
		RESET pin	150	350	900	
I_{IL} I_{IH}	Input Leakage Current All Input pins but RESET	V_{IN} = V_{SS} (No Pull-Up configured) V_{IN} = V_{DD}		0.1	1.0	µA
	Input Leakage Current RESET pin	V_{IN} = V_{SS} V_{IN} = V_{DD}	-8	-16	-30 10	
I_{DD}	Supply Current in RESET Mode	V_{RESET}=V_{SS} f_{OSC}=8MHz			7.0	mA
	Supply Current in RUN Mode (2)	V_{DD}=5.0V f_{INT}=8MHz			7.0	mA
	Supply Current in WAIT Mode (3)	V_{DD}=5.0V f_{INT}=8MHz			1.5	mA
	Supply Current in STOP Mode, with LVD disabled(3)	I_{LOAD}=0mA V_{DD}=5.0V			20	µA
	Supply Current in STOP Mode, with LVD enabled(3)	I_{LOAD}=0mA V_{DD}=5.0V			500	
Retention	EPROM Data Retention	T_A = 55°C	10			years

Notes:
(1) Hysteresis voltage between switching levels
(2) All peripherals running
(3) All peripherals in stand-by

DC ELECTRICAL CHARACTERISTICS (Cont'd)

(T_A = -40 to +85°C unless otherwise specified))

Symbol	Parameter	Test Conditions	Value			Unit
			Min.	Typ.	Max.	
V_{up}	LVD Threshold in power-on		V_{dn} +50 mV	4.1	4.3	V
V_{dn}	LVD threshold in powerdown		3.6	3.8	V_{up} -50 mV	V
V_{OL}	Low Level Output Voltage All Output pins	V_{DD}= 5.0V; I_{OL} = +10µA V_{DD}= 5.0V; I_{OL} = + 5mA V_{DD}= 5.0V; I_{OL} = + 10mAv			0.1 0.8 1.2	V
	Low Level Output Voltage 20 mA Sink I/O pins	V_{DD}= 5.0V; I_{OL} = +10µA V_{DD}= 5.0V; I_{OL} = +10mA V_{DD}= 5.0V; I_{OL} = +20mA V_{DD}= 5.0V; I_{OL} = +30mA			0.1 0.8 1.3 2.0	
V_{OH}	High Level Output Voltage All Output pins	V_{DD}= 5.0V; I_{OH} = -10µA V_{DD}= 5.0V; I_{OH} = -5.0mA	4.9 3.5			V
I_{DD}	Supply Current in STOP Mode, with LVD disabled(*)	I_{LOAD}=0mA V_{DD}=5.0V			10	µA

Note:
(*) All Peripherals in stand-by.

6.4 AC ELECTRICAL CHARACTERISTICS

(T_A = -40 to +125°C unless otherwise specified)

Symbol	Parameter	Test Conditions	Value			Unit
			Min.	Typ.	Max.	
t_{REC}	Supply Recovery Time (1)		100			ms
f_{LFAO}	Internal frequency with LFAO active		200	400	800	kHz
f_{OSG}	Internal Frequency with OSG enabled2)	V_{DD} = 3V V_{DD} = 3.6V V_{DD} = 4.5V V_{DD} = 6V	1 1 2 2		f_{OSC}	MHz
f_{RC}	Internal frequency with RC oscillator and OSG disabled2) 3)	VDD=5.0V R=47kΩ R=100kΩ R=470kΩ	 4 2.7 800	 5 3.2 850	 5.8 3.5 900	 MHz MHz kHz
C_{IN}	Input Capacitance	All Inputs Pins			10	pF
C_{OUT}	Output Capacitance	All Outputs Pins			10	pF

Notes:
1. Period for which V_{DD} has to be connected at 0V to allow internal Reset function at next power-up.
2 An oscillator frequency above 1MHz is recommended for reliable A/D results.
3. Measure performed with OSCin pin soldered on PCB, with an around 2pF equivalent capacitance.

6.5 A/D CONVERTER CHARACTERISTICS

(T_A = -40 to +125°C unless otherwise specified)

Symbol	Parameter	Test Conditions	Value			Unit
			Min.	Typ.	Max.	
Res	Resolution			8		Bit
A_{TOT}	Total Accuracy (1) (2)	f_{OSC} > 1.2MHz f_{OSC} > 32kHz			±2 ±4	LSB
t_C	Conversion Time	f_{OSC} = 8MHz (T_A < 85°C) f_{OSC} = 4 MHz		70 140		µs
ZIR	Zero Input Reading	Conversion result when $V_{IN} = V_{SS}$	00			Hex
FSR	Full Scale Reading	Conversion result when $V_{IN} = V_{DD}$			FF	Hex
AD_I	Analog Input Current During Conversion	V_{DD}= 4.5V			1.0	µA
AC_{IN}	Analog Input Capacitance			2	5	pF

Notes:
1. Noise at VDD, VSS <10mV
2. With oscillator frequencies less than 1MHz, the A/D Converter accuracy is decreased.

6.6 TIMER CHARACTERISTICS

(T_A = -40 to +125°C unless otherwise specified)

Symbol	Parameter	Test Conditions	Value			Unit
			Min.	Typ.	Max.	
f_{IN}	Input Frequency on TIMER Pin				$\frac{f_{INT}}{4}$	MHz
t_W	Pulse Width at TIMER Pin	V_{DD} = 3.0V V_{DD} >4.5V	1 125			µs ns

6.7 SPI CHARACTERISTICS

(T_A = -40 to +125°C unless otherwise specified)

Symbol	Parameter	Test Conditions	Value			Unit
			Min.	Typ.	Max.	
F_{CL}	Clock Frequency	Applied on Scl			500	kHz
t_{SU}	Set-up Time	Applied on Sin		250		ns
t_h	Hold Time	Applied onSin		50		ns

6.8 ARTIMER ELECTRICAL CHARACTERISTICS

(T_A = -40 to +125°C unless otherwise specified)

Symbol	Parameter	Test Conditions	Value			Unit
			Min	Typ	Max	
f_{IN}	Input Frequency on ARTIMin Pin	RUN and WAIT Modes			$\frac{f_{INT}}{4}$	MHz
		STOP mode			2	

Figure 35.. RC frequency versus Vcc

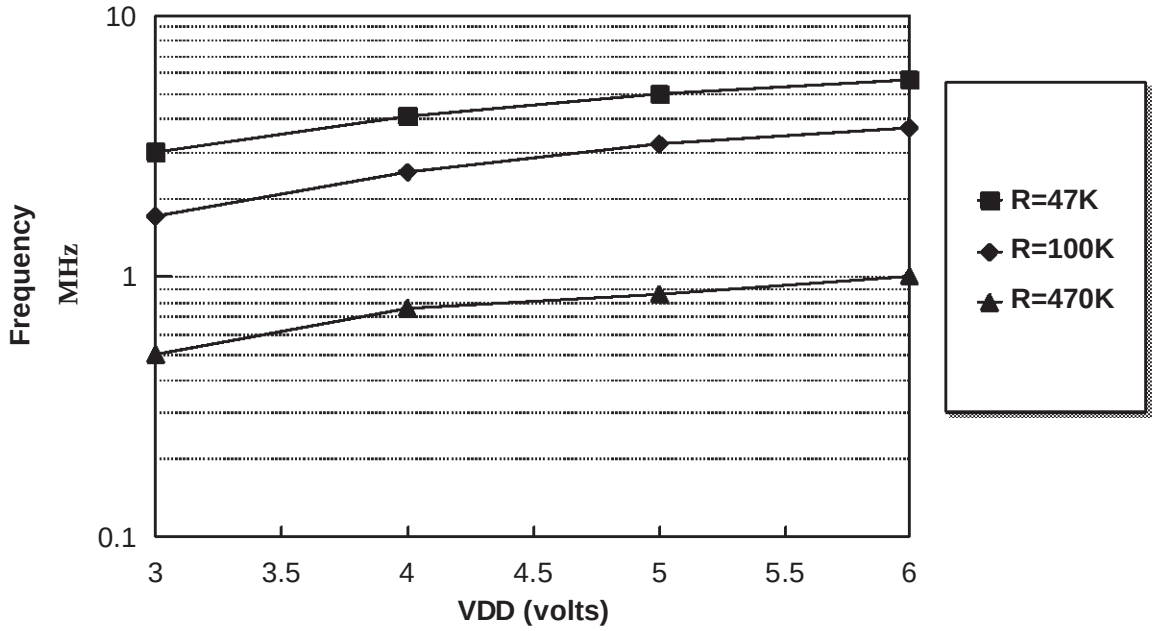

This curves represents typical variations and is given for guidance only

Figure 36. LVD thresholds versus temperature

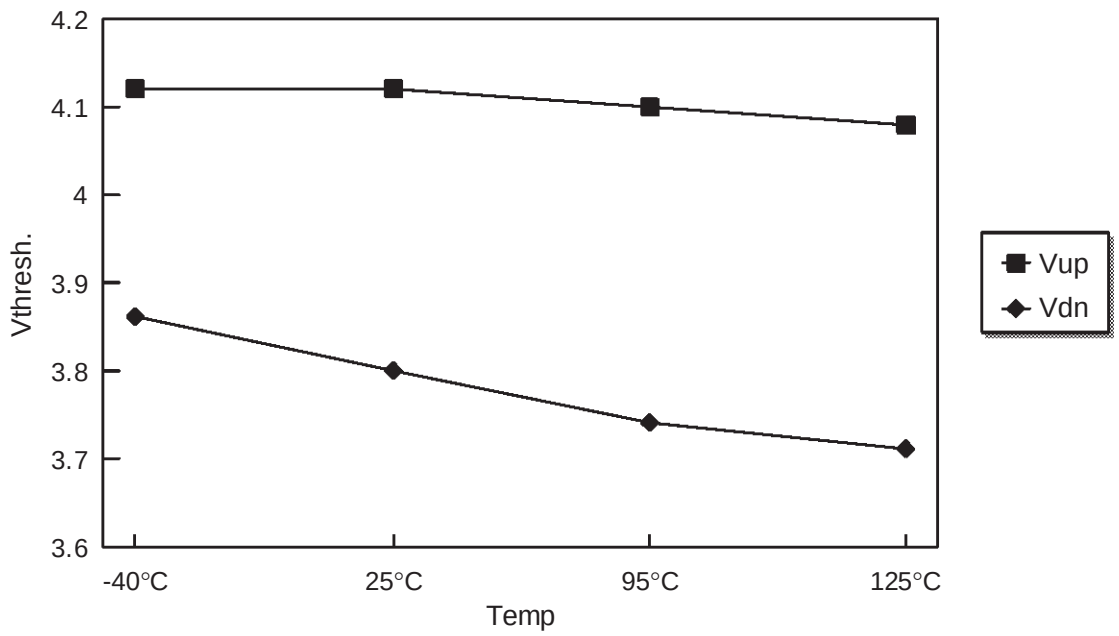

This curves represents typical variations and is given for guidance only

Figure 37. Idd WAIT versus Vcc at 8 Mhz for OTP devices

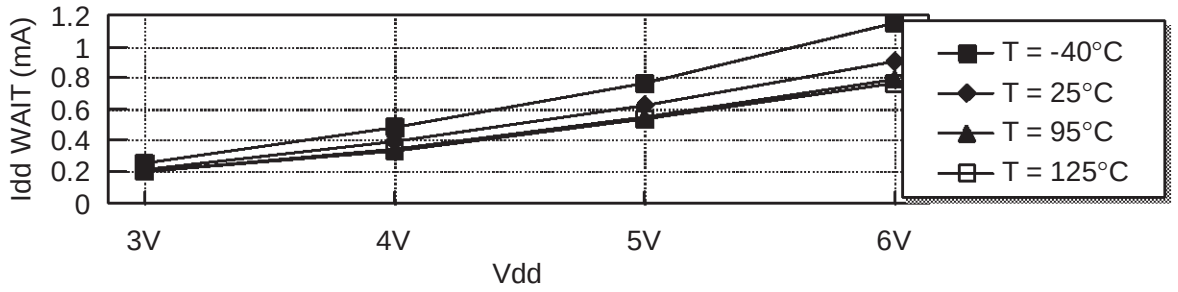

This curves represents typical variations and is given for guidance only

Figure 38. Idd STOP versus Vcc for OTP devices

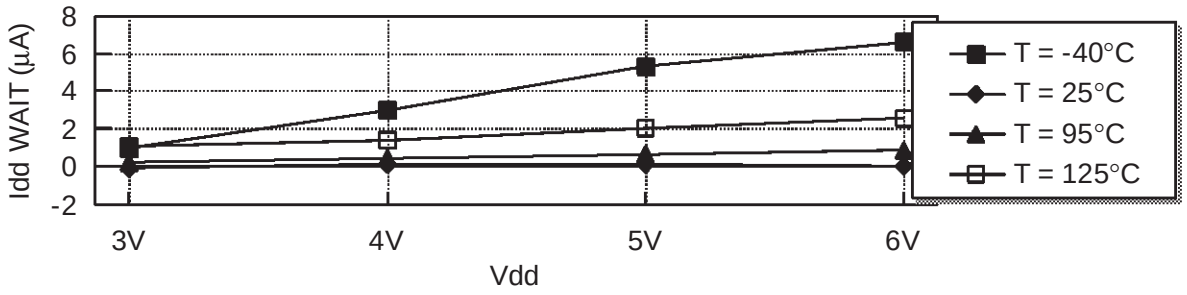

This curves represents typical variations and is given for guidance only

Figure 39. Idd STOP versus Vcc for ROM devices

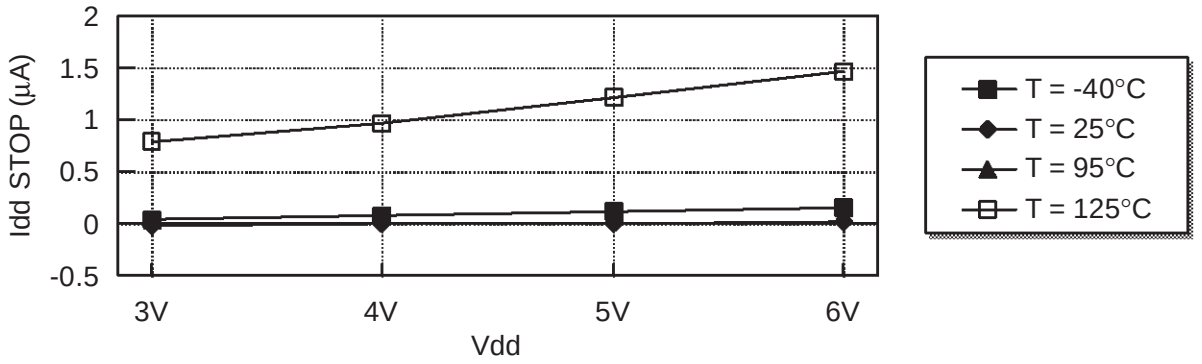

This curves represents typical variations and is given for guidance only

Figure 40. Idd WAIT versus Vcc at 8Mhz for ROM devices

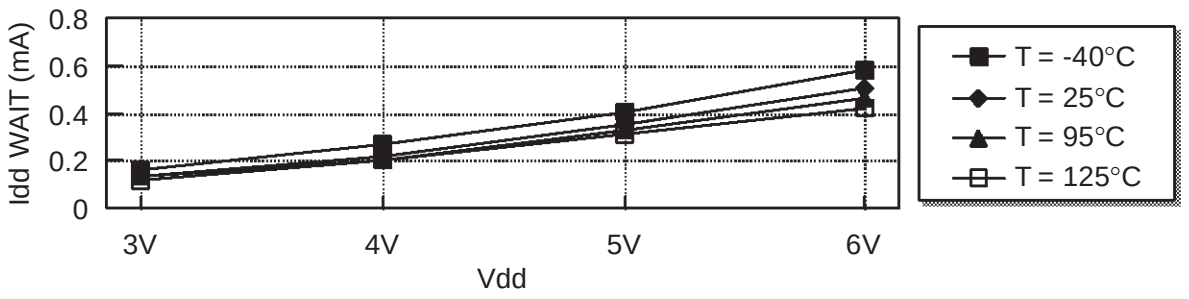

This curves represents typical variations and is given for guidance only

Figure 41. Idd RUN versus Vcc at 8 Mhz for ROM and OTP devices

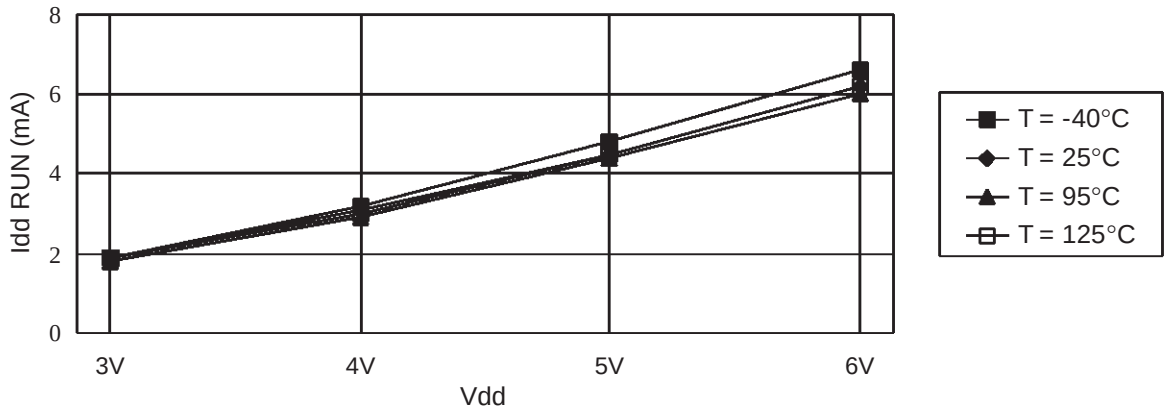

This curves represents typical variations and is given for guidance only

Figure 42. Vol versus Iol on all I/O port at Vdd=5V

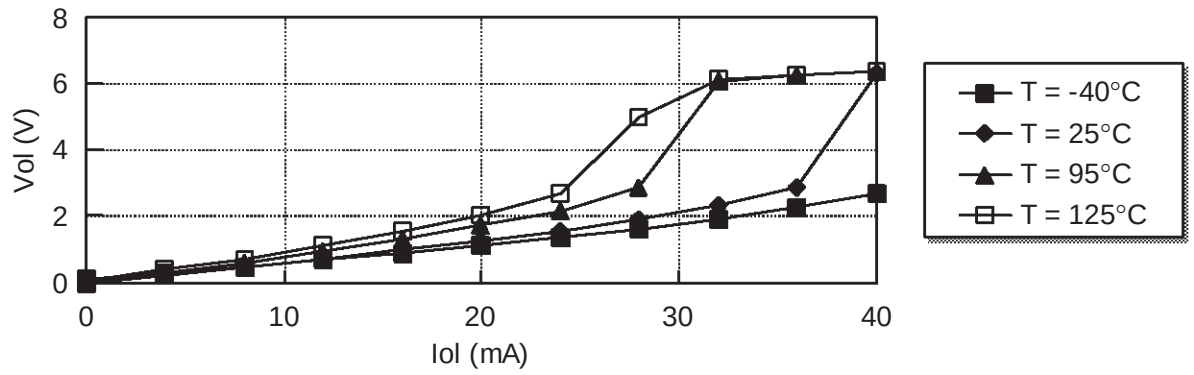

This curves represents typical variations and is given for guidance only

Figure 43. Vol versus Iol on all I/O port at T=25°C

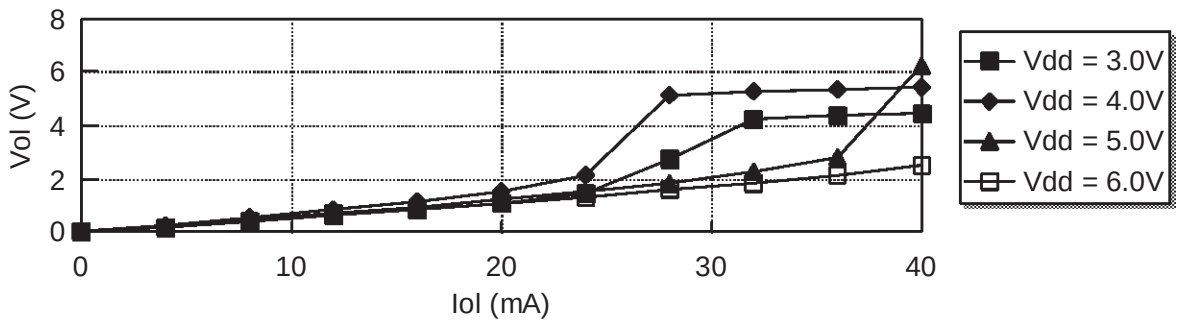

This curves represents typical variations and is given for guidance only

Figure 44. Vol versus Iol for High sink (20mA) I/Oports at T=25°C

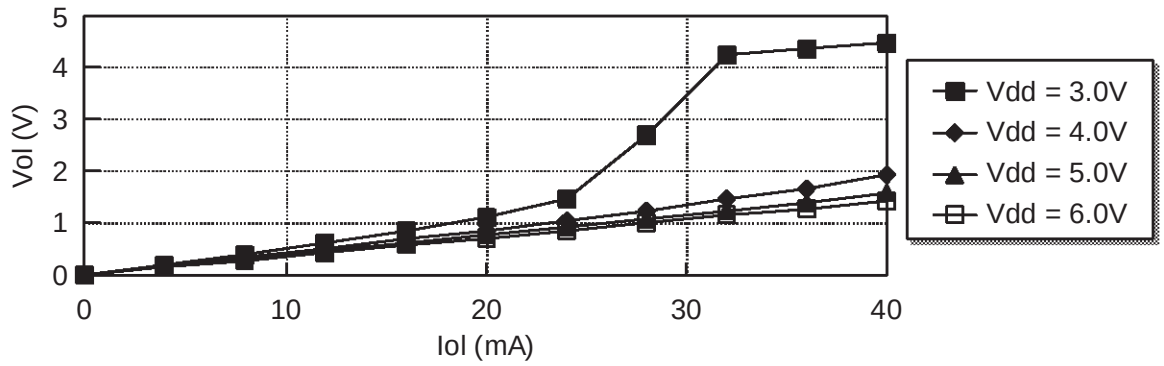

Figure 45. Vol versus Iol for High sink (20mA) I/O ports at Vdd=5V

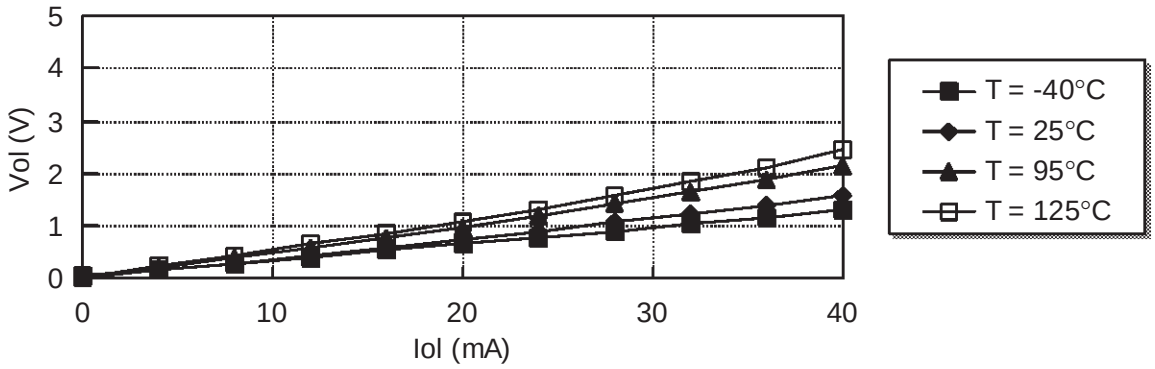

This curves represents typical variations and is given for guidance only

Figure 46. Voh versus Ioh on all I/O port at 25°C

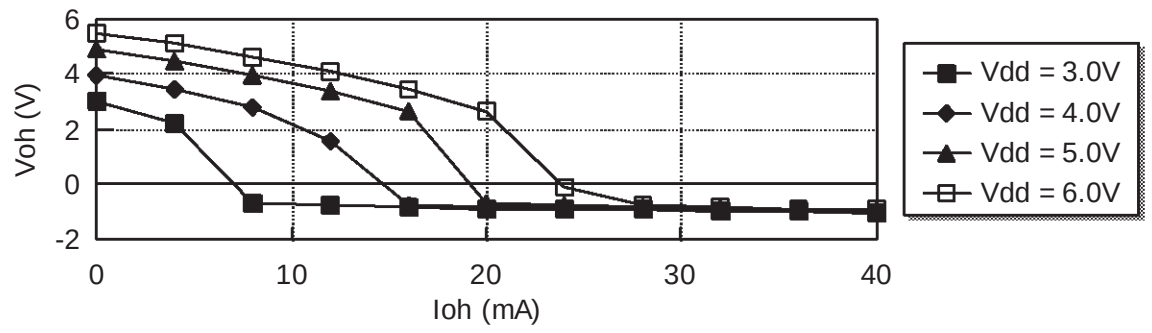

Figure 47. Voh versus Ioh on all I/O port at Vdd=5V

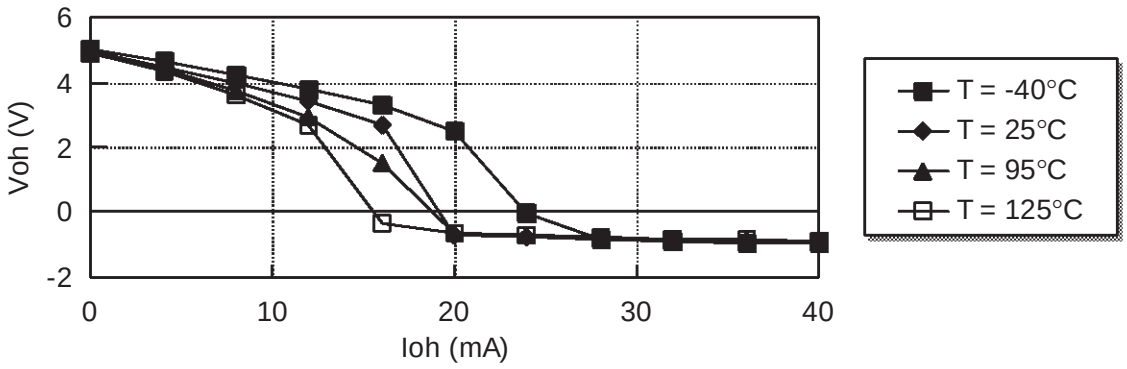

This curves represents typical variations and is given for guidance only

7 GENERAL INFORMATION

7.1 PACKAGE MECHANICAL DATA

Figure 48. 20-Pin Plastic Dual In-Line Package, 300-mil Width

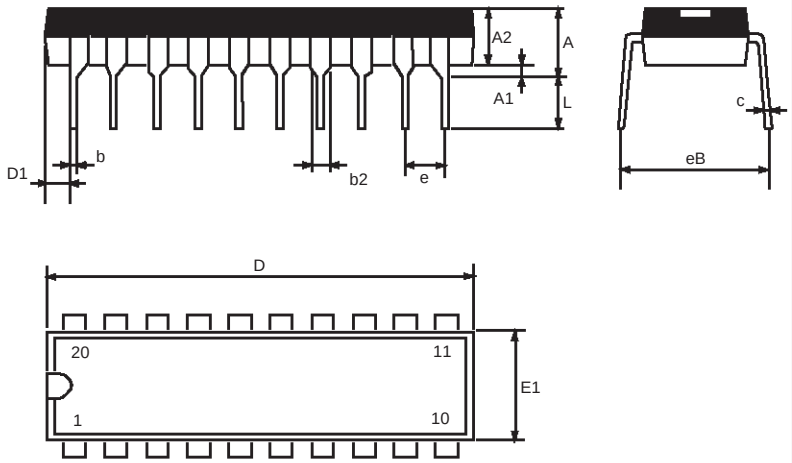

Dim.	mm			inches		
	Min	Typ	Max	Min	Typ	Max
A			5.33			0.210
A1	0.38			0.015		
A2	2.92	3.30	4.95	0.115	0.130	0.195
b	0.36	0.46	0.56	0.014	0.018	0.022
b2	1.14	1.52	1.78	0.045	0.060	0.070
c	0.20	0.25	0.36	0.008	0.010	0.014
D	24.89	26.16	26.92	0.980	1.030	1.060
D1	0.13			0.005		
e		2.54			0.100	
eB			10.92			0.430
E1	6.10	6.35	7.11	0.240	0.250	0.280
L	2.92	3.30	3.81	0.115	0.130	0.150
	Number of Pins					
N	20					

Figure 49. 20-Pin Ceramic Side-Brazed Dual In-Line Package

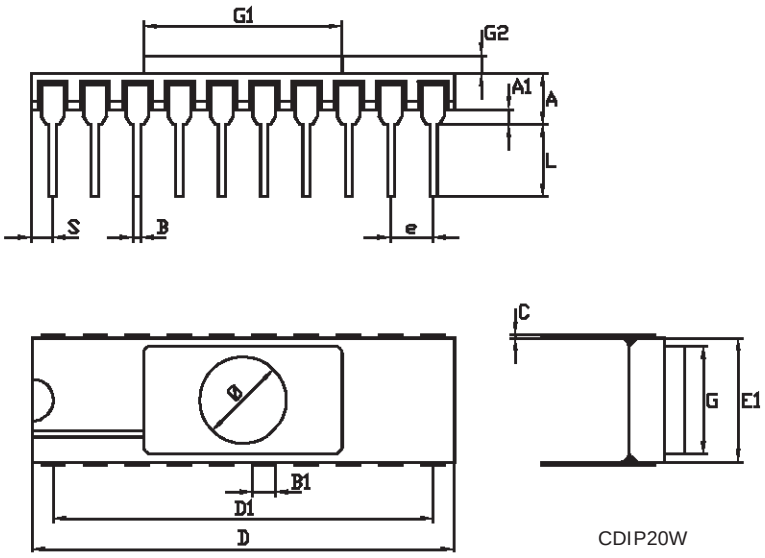

CDIP20W

Dim.	mm			inches		
	Min	Typ	Max	Min	Typ	Max
A			3.63			0.143
A1	0.38			0.015		
B	3.56	0.46	0.56	0.140	0.018	0.022
B1	1.14	12.70	1.78	0.045	0.500	0.070
C	0.20	0.25	0.36	0.008	0.010	0.014
D	24.89	25.40	25.91	0.980	1.000	1.020
D1		22.86			0.900	
E1	6.99	7.49	8.00	0.275	0.295	0.315
e		2.54			0.100	
G	6.35	6.60	6.86	0.250	0.260	0.270
G1	9.47	9.73	9.98	0.373	0.383	0.393
G2		1.14			0.045	
L	2.92	3.30	3.81	0.115	0.130	0.150
S		12.70			0.500	
Ø		4.22			0.166	
	Number of Pins					
N	20					

PACKAGE MECHANICAL DATA (Cont'd)

Figure 50. 20-Pin Plastic Small Outline Package, 300-mil Width

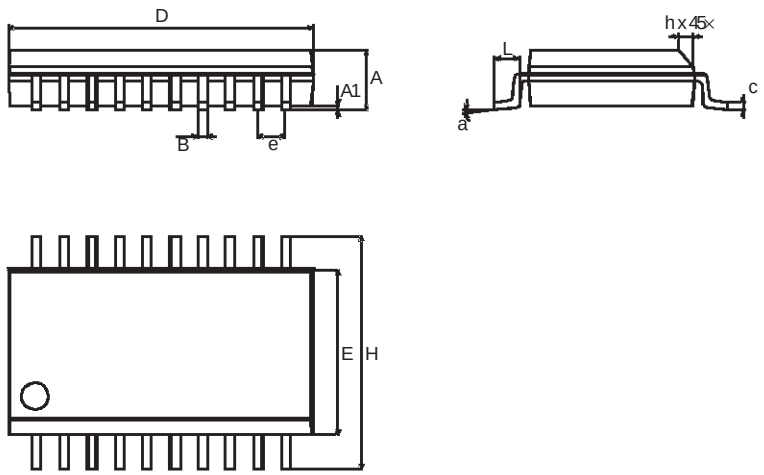

Dim.	mm			inches		
	Min	Typ	Max	Min	Typ	Max
A	2.35		2.65	0.093		0.104
A1	0.10		0.30	0.004		0.012
B	0.33		0.51	0.013		0.020
C	0.23		0.32	0.009		0.013
D	12.60		13.00	0.496		0.512
E	7.40		7.60	0.291		0.299
e		1.27			0.050	
H	10.00		10.65	0.394		0.419
h	0.25		0.75	0.010		0.030
α	0°		8°	0°		8°
L	0.40		1.27	0.016		0.050
	Number of Pins					
N	20					

THERMAL CHARACTERISTIC

Symbol	Parameter	Test Conditions	Value			Unit
			Min.	Typ.	Max.	
RthJA	Thermal Resistance	PDIP20			70	°C/W
		PSO20			70	

7.2 ORDERING INFORMATION

Table 26. OTP/EPROM VERSION ORDERING INFORMATION

Sales Type	Program Memory (Bytes)	I/O	Temperature Range	Package
ST62E18CF1	7948 (EPROM)	12	0 to 70°C	CDIP20W
ST62T18CB6	7948 (OTP)		-40 to 85°C	PDIP20
ST62T18CM6				PSO20
ST62T18CB3	7948 (OTP)		-40 to +125°C	PDIP20
ST62T18CM3				PSO20

ST62P18C

8-BIT MCUs WITH A/D CONVERTER, AUTO-RELOAD TIMER, UART, OSG, SAFE RESET AND 20-PIN PACKAGE

- 3.0 to 6.0V Supply Operating Range
- 8 MHz Maximum Clock Frequency
- -40 to +125°C Operating Temperature Range
- Run, Wait and Stop Modes
- 5 Interrupt Vectors
- Look-up Table capability in Program Memory
- Data Storage in Program Memory: User selectable size
- Data RAM: 192 bytes
- User Programmable Options
- 12 I/O pins, fully programmable as:
  - Input with pull-up resistor
  - Input without pull-up resistor
  - Input with interrupt generation
  - Open-drain or push-pull output
  - Analog Input
- 5 I/O lines can sink up to 20mA to drive LEDs or TRIACs directly
- 8-bit Timer/Counter with 7-bit programmable prescaler
- 8-bit Auto-reload Timer with 7-bit programmable prescaler (AR Timer)
- Digital Watchdog
- 8-bit A/D Converter with 7 analog inputs
- 8-bit Asynchronous Peripheral Interface (UART)
- On-chip Clock oscillator can be driven by Quartz Crystal or Ceramic resonator
- Oscillator Safe Guard
- Low Voltage Detector for safe Reset
- One external Non-Maskable Interrupt
- ST623x-EMU2 Emulation and Development System (connects to an MS-DOS PC via a parallel port).

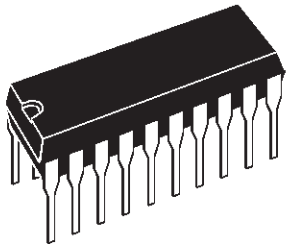

PDIP20

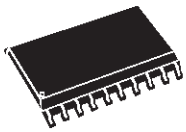

PSO20

(See end of Datasheet for Ordering Information)

DEVICE SUMMARY

DEVICE	ROM (Bytes)	I/O Pins
ST62P18C	7948	12

Rev. 2.6

1 GENERAL DESCRIPTION

1.1 INTRODUCTION

The ST62P18C are the **F**actory **A**dvanced **S**ervice **T**echnique ROM (FASTROM) versions of ST62T18C OTP devices.

They offer the same functionality as OTP devices, selecting as FASTROM options the options defined in the programmable option byte of the OTP version. They also offer an identifier option. If this option is enabled, each FASTROM device is programmed with a unique 5-byte number which is mapped at addresses 0F9Bh-0F9Fh. The user must therefore leave these bytes blanked.

The identification number is structured as follows:

0F9Bh	T0
0F9Ch	T1
0F9Dh	T2
0F9Eh	T3
0F9Fh	Test ID

with T0, T1, T2, T3 = time in seconds since 01/01/1970 and Test ID = Tester Identifier.

1.2 ORDERING INFORMATION

The following section deals with the procedure for transfer of customer codes to STMicroelectronics.

1.2.1 Transfer of Customer Code

Customer code is made up of the ROM contents and the list of the selected FASTROM options. The ROM contents are to be sent on diskette, or by electronic means, with the hexadecimal file generated by the development tool. All unused bytes must be set to FFh.

The selected options are communicated to STMicroelectronics using the correctly filled OPTION LIST appended. See page 80.

1.2.2 Listing Generation and Verification

When STMicroelectronics receives the user's ROM contents, a computer listing is generated from it. This listing refers exactly to the ROM contents and options which will be used to produce the specified MCU. The listing is then returned to the customer who must thoroughly check, complete, sign and return it to STMicroelectronics. The signed listing forms a part of the contractual agreement for the production of the specific customer MCU.

The STMicroelectronics Sales Organization will be pleased to provide detailed information on contractual points.

Table 1. ROM Memory Map for ST62P18C

ROM Page	Device Address	Description
Page 0	0000h-007Fh 0080h-07FFh	Reserved User ROM
Page 1 "STATIC"	0800h-0F9Fh 0FA0h-0FEFh 0FF0h-0FF7h 0FF8h-0FFBh 0FFCh-0FFDh 0FFEh-0FFFh	User ROM Reserved Interrupt Vectors Reserved NMI Vector Reset Vector
Page 2	0000h-000Fh 0010h-07FFh	Reserved User ROM
Page 3	0000h-000Fh 0010h-07FFh	Reserved User ROM

Table 2. FASTROM version Ordering Information

Sales Type	ROM	I/O	Temperature Range	Package
ST62P18CB1/XXX ST62P18CB6/XXX ST62P28CB3/XXX(*)	7948	12	0 to +70°C -40 to 85°C -40 to + 125°C	PDIP20
ST62P18CM1/XXX ST62P18CM6/XXX ST62P28CM3/XXX(*)			0 to +70°C -40 to 85°C -40 to + 125°C	PSO20

(*) Advanced information

ST6218C

8-BIT MCUs WITH A/D CONVERTER, AUTO-RELOAD TIMER, UART, OSG, SAFE RESET AND 20-PIN PACKAGE

- 3.0 to 6.0V Supply Operating Range
- 8 MHz Maximum Clock Frequency
- -40 to +125°C Operating Temperature Range
- Run, Wait and Stop Modes
- 5 Interrupt Vectors
- Look-up Table capability in Program Memory
- Data Storage in Program Memory:
  User selectable size
- Data RAM: 192 bytes
- User Programmable Options
- 12 I/O pins, fully programmable as:
  – Input with pull-up resistor
  – Input without pull-up resistor
  – Input with interrupt generation
  – Open-drain or push-pull output
  – Analog Input
- 5 I/O lines can sink up to 20mA to drive LEDs or TRIACs directly
- 8-bit Timer/Counter with 7-bit programmable prescaler
- 8-bit Auto-reload Timer with 7-bit programmable prescaler (AR Timer)
- Digital Watchdog
- 8-bit A/D Converter with 7 analog inputs
- 8-bit Asynchronous Peripheral Interface (UART)
- On-chip Clock oscillator can be driven by Quartz Crystal or Ceramic resonator
- Oscillator Safe Guard
- Low Voltage Detector for safe Reset
- One external Non-Maskable Interrupt
- ST623x-EMU2 Emulation and Development System (connects to an MS-DOS PC via a parallel port).

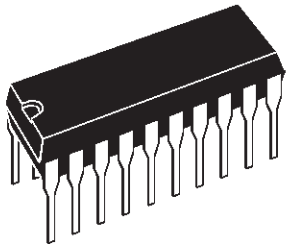

PDIP20

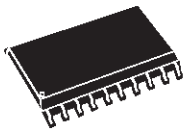

PSO20

(See end of Datasheet for Ordering Information)

DEVICE SUMMARY

DEVICE	ROM (Bytes)	I/O Pins
ST6218C	7948	12

Rev. 2.6

1 GENERAL DESCRIPTION

1.1 INTRODUCTION

The ST6218C is mask programmed ROM version of ST62T18C OTP devices.

They offer the same functionality as OTP devices, selecting as ROM options the options defined in the programmable option byte of the OTP version.

1.2 ROM READOUT PROTECTION

If the ROM READOUT PROTECTION option is selected, a protection fuse can be blown to prevent any access to the program memory content.

In case the user wants to blow this fuse, high voltage must be applied on the TEST pin.

Figure 1. Programming wave form

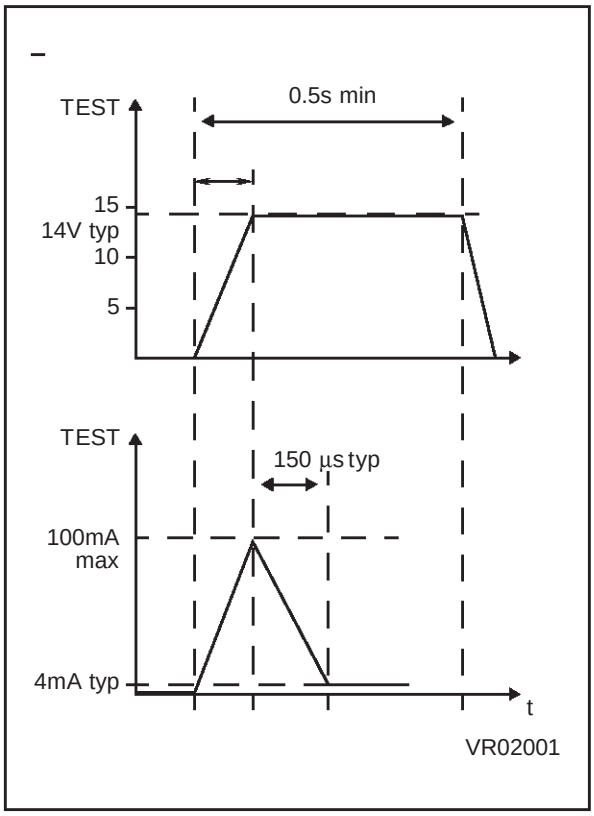

Figure 2. Programming Circuit

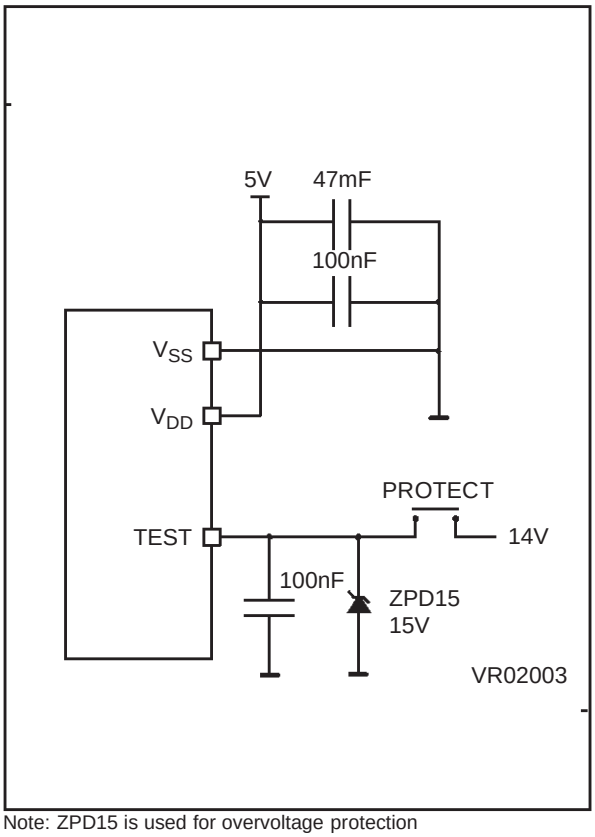

Note: ZPD15 is used for overvoltage protection

1.3 ORDERING INFORMATION

The following section deals with the procedure for transfer of customer codes to STMicroelectronics.

1.3.1 Transfer of Customer Code

Customer code is made up of the ROM contents and the list of the selected mask options. The ROM contents are to be sent on diskette, or by electronic means, with the hexadecimal file generated by the development tool. All unused bytes must be set to FFh.

The selected mask options are communicated to STMicroelectronics using the correctly filled OPTION LIST appended. See page 80.

1.3.2 Listing Generation and Verification

When STMicroelectronics receives the user's ROM contents, a computer listing is generated from it. This listing refers exactly to the mask which will be used to produce the specified MCU. The listing is then returned to the customer who must thoroughly check, complete, sign and return it to STMicroelectronics. The signed listing forms a part of the contractual agreement for the creation of the specific customer mask.

The STMicroelectronics Sales Organization will be pleased to provide detailed information on contractual points.

Table 1. ROM Memory Map for ST6218C

ROM Page	Device Address	Description
Page 0	0000h-007Fh 0080h-07FFh	Reserved User ROM
Page 1 "STATIC"	0800h-0F9Fh 0FA0h-0FEFh 0FF0h-0FF7h 0FF8h-0FFBh 0FFCh-0FFDh 0FFEh-0FFFh	User ROM Reserved Interrupt Vectors Reserved NMI Vector Reset Vector
Page 2	0000h-000Fh 0010h-07FFh	Reserved User ROM
Page 3	0000h-000Fh 0010h-07FFh	Reserved User ROM

Table 2. ROM version Ordering Information

Sales Type	ROM	I/O	Temperature Range	Package
ST6218CB1/XXX ST6218CB6/XXX ST6218CB3/XXX	7948	12	0 to +70°C -40 to 85°C -40 to + 125°C	PDIP20
ST6218CM1/XXX ST6218CM6/XXX ST6218CM3/XXX			0 to +70°C -40 to 85°C -40 to + 125°C	PSO20

ST6218C/P18C MICROCONTROLLER OPTION LIST

Customer: . . . . . .
Address: . . . . . .
. . . . . .
Contact: . . . . . .
Phone: . . . . . .
Reference: . . . . . .

STMicroelectronics references:

Device: [ ] ST6218C (8 KB) [ ] ST62P18C (8 KB)

Package: [ ] Dual in Line Plastic
[ ] Small Outline Plastic with conditioning

Conditioning option: [ ] Standard (Tube)
[ ] Tape & Reel

Temperature Range: [ ] 0°C to + 70°C [ ] - 40°C to + 85°C
[ ] - 40°C to + 125°C

Marking: [ ] Standard marking
[ ] Special marking (ROM only):
PDIP20 (10 char. max): _ _ _ _ _ _ _ _ _ _
SO20 (8 char.max): _ _ _ _ _ _ _ _
Authorized characters are letters, digits, '.', '-', '/' and spaces only.

Oscillator Safeguard: [ ] Enabled [ ] Disabled
Watchdog Selection: [ ] Software Activation
[ ] Hardware Activation
Timer pull-up: [ ] Enabled [ ] Disabled
NMI pull-up: [ ] Enabled [ ] Disabled
Ports pull-up: [ ] Enabled [ ] Disabled
Oscillator Selection: [ ] Quartz crystal / Ceramic resonator
[ ] RC network

Readout Protection: FASTROM:
[ ] Enabled [ ] Disabled
ROM:
[ ] Enabled:
[ ] Fuse is blown by STMicroelectronics
[ ] Fuse can be blown by the customer
[ ] Disabled

Low Voltage Detector: [ ] Enabled [ ] Disabled
External STOP Mode Control: [ ] Enabled [ ] Disabled
UART Frame: [ ] 10-bit [ ] 11-bit
ADC Synchro: [ ] Enabled [ ] Disabled
Identifier (FASTROM only): [ ] Enabled [ ] Disabled

Comments:

Oscillator Frequency in the application: . . . . . .
Supply Operating Range in the application: . . . . . .
Notes: . . . . . .
Date: . . . . . .
Signature: . . . . . .

2 SUMMARY OF CHANGES

Rev.	Main Changes	Date
2.6	Changed section 4.1.3 on page 39. Changed Figure 24 on page 40. Changed Figure 27 on page 46. Changed section 1.1 on page 76. Changed Figure 48 on page 73 and Figure 50 on page 74. Changed option list (page 80).	July 2001

Notes: