74VHCT273A

OCTAL D-TYPE FLIP FLOP WITH CLEAR

- HIGH SPEED:
  f_{MAX} = 170 MHz (TYP.) at V_{CC} = 5V
- LOW POWER DISSIPATION:
  I_{CC} = 4 µA (MAX.) at T_A=25°C
- COMPATIBLE WITH TTL OUTPUTS:
  V_{IH} = 2V (MIN.), V_{IL} = 0.8V (MAX)
- POWER DOWN PROTECTION ON INPUTS & OUTPUTS
- SYMMETRICAL OUTPUT IMPEDANCE:
  $|I_{OH}| = I_{OL}$ = 8 mA (MIN)
- BALANCED PROPAGATION DELAYS:
  $t_{PLH} \cong t_{PHL}$
- OPERATING VOLTAGE RANGE:
  V_{CC}(OPR) = 4.5V to 5.5V
- PIN AND FUNCTION COMPATIBLE WITH 74 SERIES 273
- IMPROVED LATCH-UP IMMUNITY
- LOW NOISE: V_{OLP} = 0.9V (MAX.)

SOP TSSOP

ORDER CODES

PACKAGE	TUBE	T & R
SOP	74VHCT273AM	74VHCT273AMTR
TSSOP		74VHCT273ATTR

DESCRIPTION

The 74VHCT273A is an advanced high-speed CMOS OCTAL D-TYPE FLIP FLOP WITH CLEAR fabricated with sub-micron silicon gate and double-layer metal wiring C^2MOS technology.

Information signals applied to D inputs are transferred to the Q outputs on the positive going edge of the clock pulse.

When the $\overline{CLEAR}$ input is held low, the Q outputs are held low independently of the other inputs.

Power down protection is provided on all inputs and outputs and 0 to 7V can be accepted on inputs with no regard to the supply voltage. This device can be used to interface 5V to 3V since all inputs are equipped with TTL threshold.

All inputs and outputs are equipped with protection circuits against static discharge, giving them 2KV ESD immunity and transient excess voltage.

PIN CONNECTION AND IEC LOGIC SYMBOLS

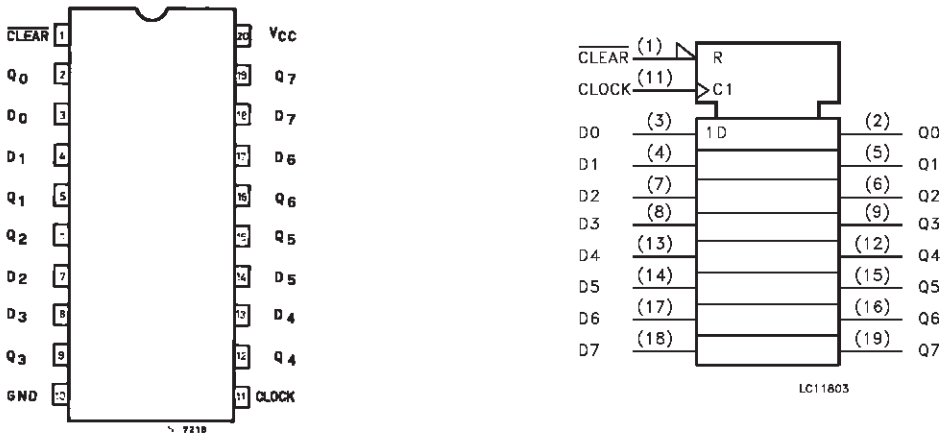

INPUT EQUIVALENT CIRCUIT

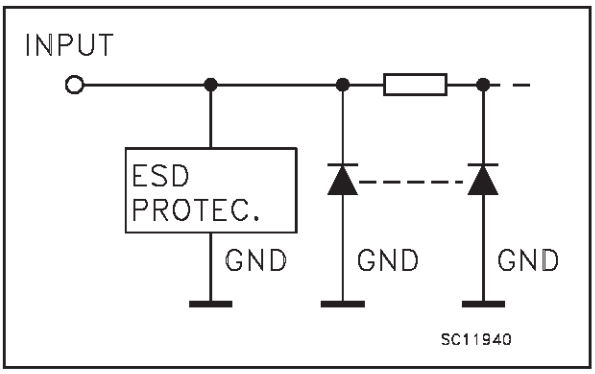

PIN DESCRIPTION

PIN No	SYMBOL	NAME AND FUNCTION
1	$\overline{CLEAR}$	Asyncronous Master Reset (Active LOW)
2, 5, 6, 9, 12, 15, 16,19	Q0 to Q7	Flip-Flop Outputs
3, 4, 7, 8, 13, 14, 17, 18	D0 to D7	Data Inputs
11	CLOCK	Clock Input (LOW-to-HIGH Edge Triggered)
10	GND	Ground (0V)
20	V_{CC}	Positive Supply Voltage

TRUTH TABLE

INPUTS			OUTPUT	FUNCTION
$\overline{CLEAR}$	D	CLOCK	Q	
L	X	X	L	CLEAR
H	L	↑	L	
H	H	↑	H	
H	X	↓	Q_n	NO CHANGE

X : Don't care

LOGIC DIAGRAM

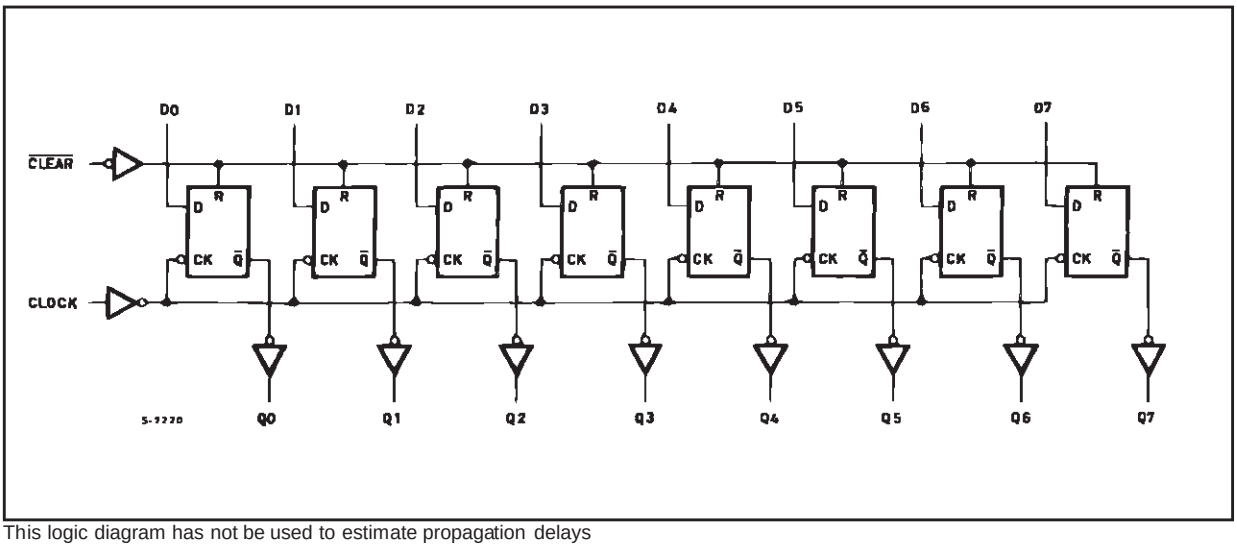

This logic diagram has not be used to estimate propagation delays

ABSOLUTE MAXIMUM RATINGS

Symbol	Parameter	Value	Unit
V_{CC}	Supply Voltage	-0.5 to +7.0	V
V_I	DC Input Voltage	-0.5 to +7.0	V
V_O	DC Output Voltage (see note 1)	-0.5 to +7.0	V
V_O	DC Output Voltage (see note 2)	-0.5 to V_{CC} + 0.5	V
I_{IK}	DC Input Diode Current	- 20	mA
I_{OK}	DC Output Diode Current	± 20	mA
I_O	DC Output Current	± 25	mA
I_{CC} or I_{GND}	DC V_{CC} or Ground Current	± 50	mA
T_{stg}	Storage Temperature	-65 to +150	°C
T_L	Lead Temperature (10 sec)	300	°C

Absolute Maximum Ratings are those values beyond which damage to the device may occur. Functional operation under these conditions is not implied
1) V_{CC} = 0V
2) High or Low State

RECOMMENDED OPERATING CONDITIONS

Symbol	Parameter	Value	Unit
V_{CC}	Supply Voltage	4.5 to 5.5	V
V_I	Input Voltage	0 to 5.5	V
V_O	Output Voltage (see note 1)	0 to 5.5	V
V_O	Output Voltage (see note 2)	0 to V_{CC}	V
T_{op}	Operating Temperature	-55 to 125	°C
dt/dv	Input Rise and Fall Time (see note 3) (V_{CC} = 5.0 ± 0.5V)	0 to 20	ns/V

1) V_{CC} = 0V
2) High or Low State
3) VIN from 0.8V to 2V

DC SPECIFICATIONS

Symbol	Parameter	Test Condition		Value							Unit
		V_{CC} (V)		T_A = 25°C			-40 to 85°C		-55 to 125°C		
				Min.	Typ.	Max.	Min.	Max.	Min.	Max.	
V_{IH}	High Level Input Voltage	4.5 to 5.5		2			2		2		V
V_{IL}	Low Level Input Voltage	4.5 to 5.5				0.8		0.8		0.8	V
V_{OH}	High Level Output Voltage	4.5	I_O=-50 µA	4.4	4.5		4.4		4.4		V
		4.5	I_O=-8 mA	3.94			3.8		3.7		
V_{OL}	Low Level Output Voltage	4.5	I_O=50 µA		0.0	0.1		0.1		0.1	V
		4.5	I_O=8 mA			0.36		0.44		0.55	
I_I	Input Leakage Current	0 to 5.5	V_I = 5.5V or GND			± 0.1		± 1.0		± 1.0	µA
I_{CC}	Quiescent Supply Current	5.5	V_I = V_{CC} or GND			4		40		40	µA
I_{CC}	Additional Worst Case Supply Current	5.5	One Input at 3.4V, other input at V_{CC} or GND			1.35		1.5		1.5	mA
I_{OPD}	Output Leakage Current	0	V_{OUT} = 5.5V			0.5		5.0		5.0	µA

AC ELECTRICAL CHARACTERISTICS (Input t_r = t_f = 3ns)

Symbol	Parameter	Test Condition			Value							Unit
		V_{CC} (V)	C_L (pF)		T_A = 25°C			-40 to 85°C		-55 to 125°C		
					Min.	Typ.	Max.	Min.	Max.	Min.	Max.	
t_{PLH} t_{PHL}	Propagation Delay Time CLOCK to Q	5.0(**)	15			5.8	8.2	1.0	10.0	1.0	10.0	ns
		5.0(**)	50			6.8	9.2	1.0	11.0	1.0	11.0	
t_{PHL}	Propagation Delay Time $\overline{CLEAR}$ to Q	5.0(**)	15			7.5	10.0	1.0	11.6	1.0	11.6	ns
		5.0(**)	50			8.5	11.0	1.0	12.6	1.0	12.6	
t_W	$\overline{CLR}$ Pulse Width LOW	5.0(**)			5.0			5.0		5.0		ns
t_W	CK Pulse Width HIGH or LOW	5.0(**)			5.0			5.0		5.0		ns
t_s	Setup Time D to CLOCK, HIGH or LOW	5.0(**)			2.0			2.0		2.0		ns
t_h	Hold Time D to CK, HIGH or LOW	5.0(**)			2.0			2.0		2.0		ns
t_{REM}	Removal Time $\overline{CLR}$ to CLOCK	5.0(**)			1.0			1.0		1.0		ns
f_{MAX}	Maximum Clock Frequency	5.0(**)	15		75	170		65		65		MHz
		5.0(**)	50		50	160		45		45		
t_{OSLH} t_{OSHL}	Output to Output Skew time (note 1)	5.0(**)	50				1.0		1.0		1.0	ns

(*) Voltage range is 5.0V ± 0.5V
Note 1 : Parameter guaranteed by design. $t_{soLH} = |t_{pLHm} - t_{pLHn}|$, $t_{soHL} = |t_{pHLm} - t_{pHLn}|$

CAPACITIVE CHARACTERISTICS

Symbol	Parameter	Test Condition	Value							Unit
			T_A = 25°C			-40 to 85°C		-55 to 125°C		
			Min.	Typ.	Max.	Min.	Max.	Min.	Max.	
C_{IN}	Input Capacitance			6	10		10		10	pF
C_{PD}	Power Dissipation Capacitance (note 1)			16						pF

1) C_{PD} is defined as the value of the IC's internal equivalent capacitance which is calculated from the operating current consumption without load. (Refer to Test Circuit). Average operating current can be obtained by the following equation. $I_{CC(opr)} = C_{PD} \times V_{CC} \times f_{IN} + I_{CC}/8$ (per Flip-Flop)

DYNAMIC SWITCHING CHARACTERISTICS

Symbol	Parameter	Test Condition		Value							Unit
		V_{CC} (V)		T_A = 25°C			-40 to 85°C		-55 to 125°C		
				Min.	Typ.	Max.	Min.	Max.	Min.	Max.	
V_{OLP}	Dynamic Low Voltage Quiet Output (note 1, 2)	5.0	C_L = 50 pF		0.6	0.9					V
V_{OLV}				-0.9	-0.6						
V_{IHD}	Dynamic High Voltage Input (note 1, 3)	5.0		2.0							
V_{ILD}	Dynamic Low Voltage Input (note 1, 3)	5.0				0.8					

1) Worst case package.
2) Max number of outputs defined as (n). Data inputs are driven 0V to 3.0V, (n-1) outputs switching and one output at GND.
3) Max number of data inputs (n) switching. (n-1) switching 0V to 3.0V. Inputs under test switching: 3.0V to threshold (V_{ILD}), 0V to threshold (V_{IHD}), f=1MHz.

TEST CIRCUIT

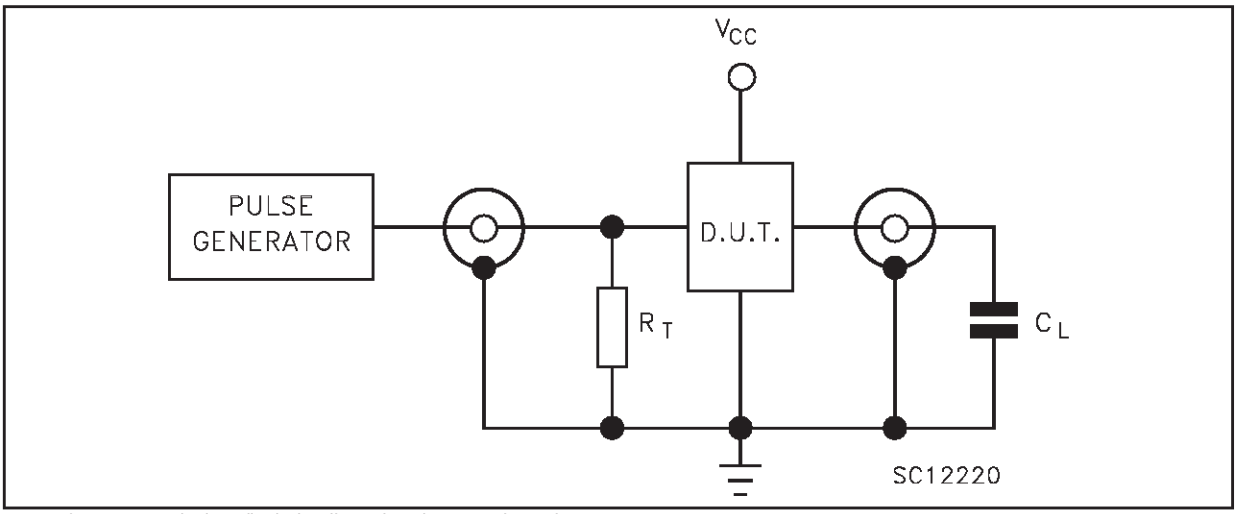

C_L =15/50pF or equivalent (includes jig and probe capacitance)
$R_T = Z_{OUT}$ of pulse generator (typically 50Ω)

WAVEFORM 1: PROPAGATION DELAYS, SETUP AND HOLD TIMES (f=1MHz; 50% duty cycle)

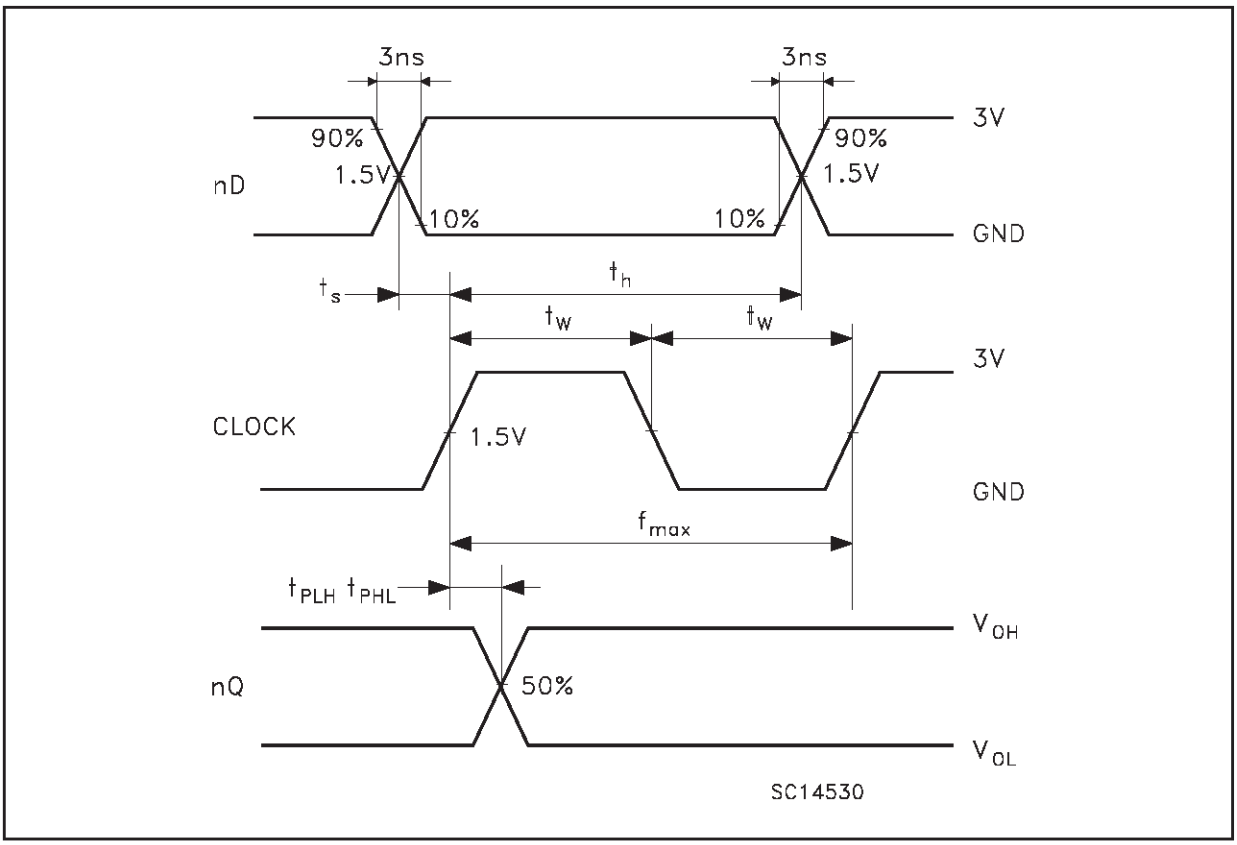

WAVEFORM 2: PROPAGATION DELAYS (f=1MHz; 50% duty cycle)

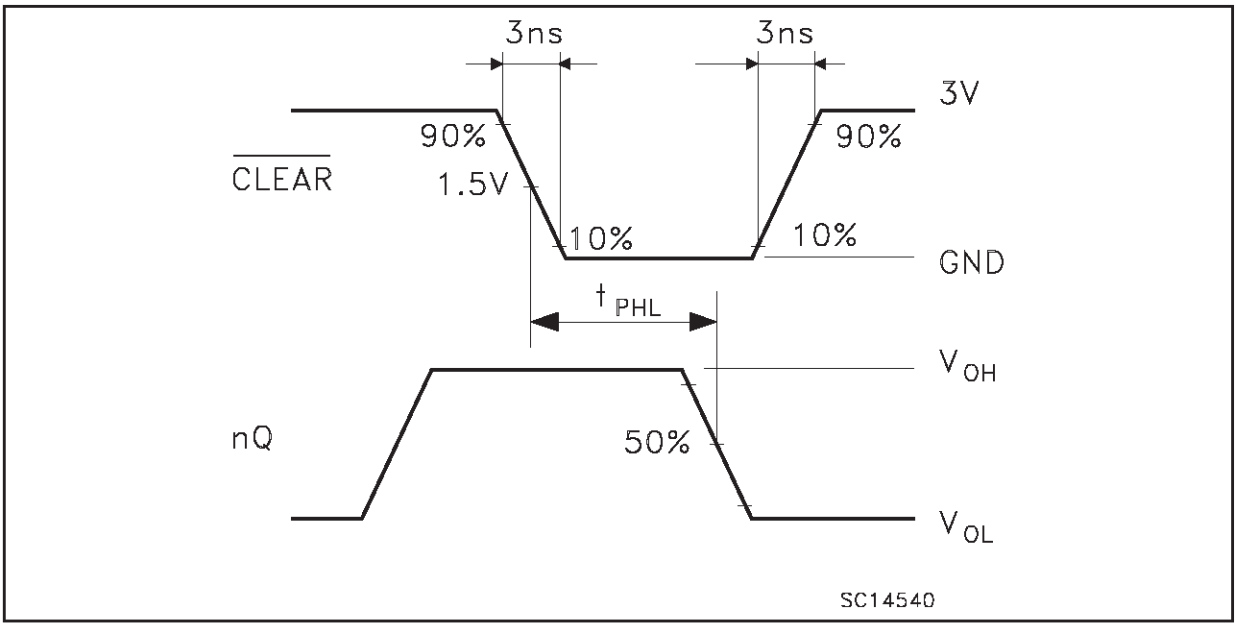

WAVEFORM 3: RECOVERY TIME (f=1MHz; 50% duty cycle)

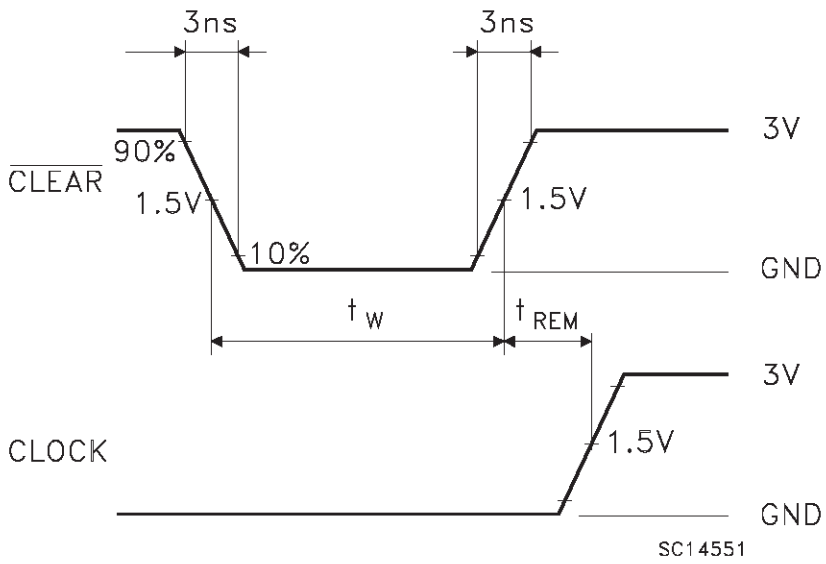

SO-20 MECHANICAL DATA

DIM.	mm.			inch		
	MIN.	TYP	MAX.	MIN.	TYP.	MAX.
A			2.65			0.104
a1	0.1		0.2	0.004		0.008
a2			2.45			0.096
b	0.35		0.49	0.014		0.019
b1	0.23		0.32	0.009		0.012
C		0.5			0.020	
c1	45° (typ.)					
D	12.60		13.00	0.496		0.512
E	10.00		10.65	0.393		0.419
e		1.27			0.050	
e3		11.43			0.450	
F	7.40		7.60	0.291		0.300
L	0.50		1.27	0.020		0.050
M			0.75			0.029
S	8° (max.)					

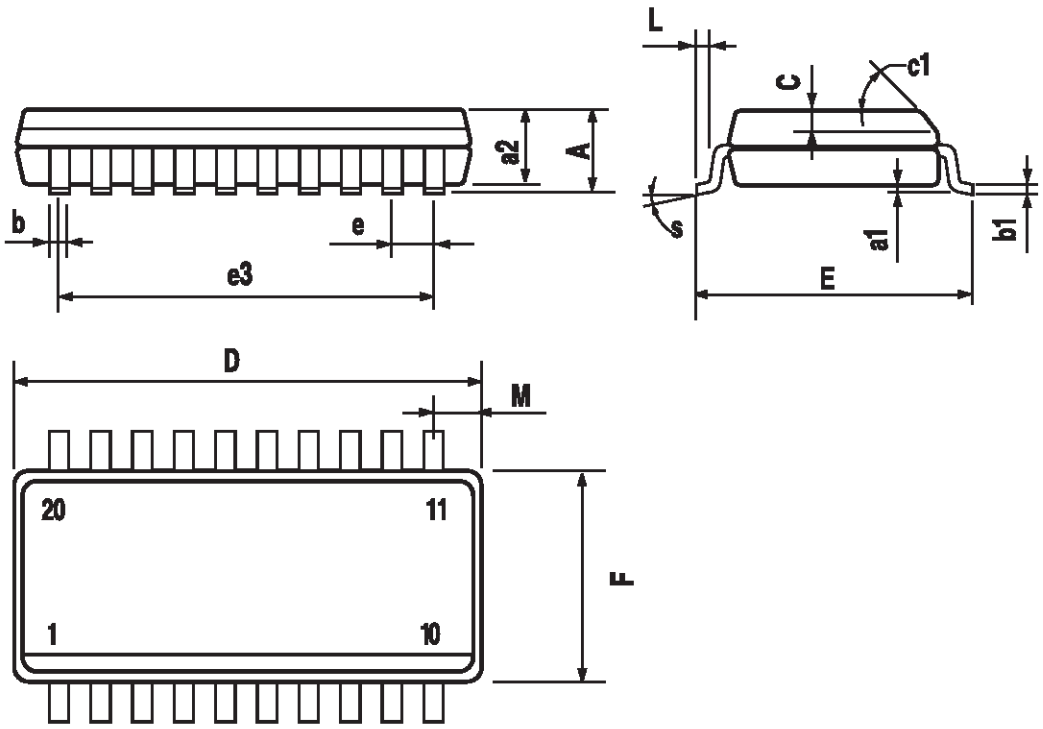

PO13L

TSSOP20 MECHANICAL DATA

DIM.	mm.			inch		
	MIN.	TYP	MAX.	MIN.	TYP.	MAX.
A			1.2			0.047
A1	0.05		0.15	0.002	0.004	0.006
A2	0.8	1	1.05	0.031	0.039	0.041
b	0.19		0.30	0.007		0.012
c	0.09		0.20	0.004		0.0089
D	6.4	6.5	6.6	0.252	0.256	0.260
E	6.2	6.4	6.6	0.244	0.252	0.260
E1	4.3	4.4	4.48	0.169	0.173	0.176
e		0.65 BSC			0.0256 BSC	
K	0°		8°	0°		8°
L	0.45	0.60	0.75	0.018	0.024	0.030

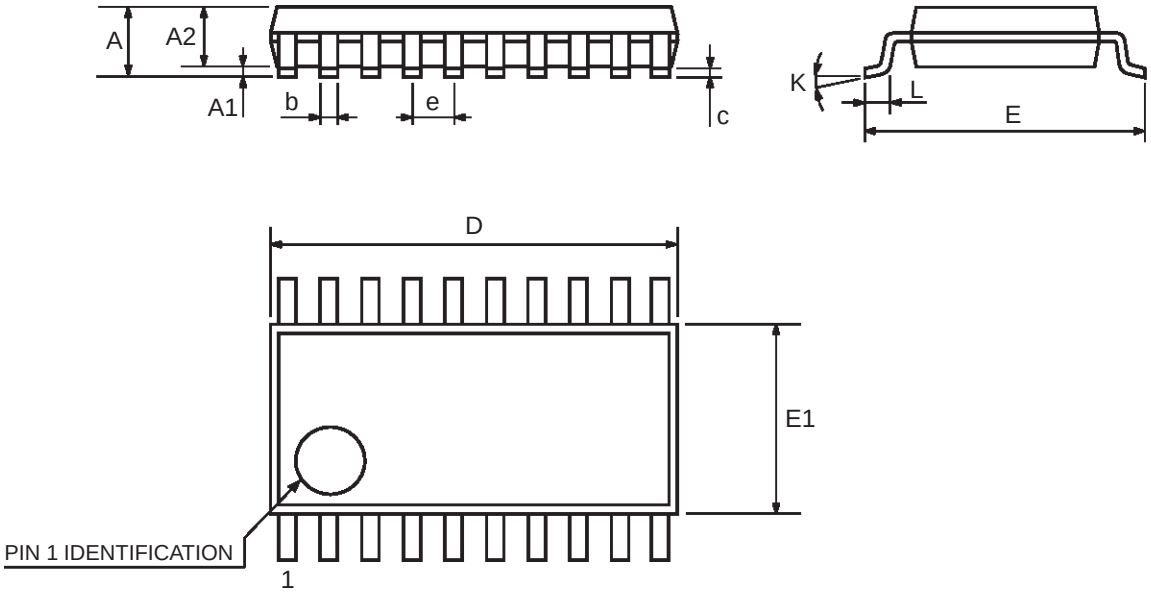

0087225C

Information furnished is believed to be accurate and reliable. However, STMicroelectronics assumes no responsibility for the consequences of use of such information nor for any infringement of patents or other rights of third parties which may result from its use. No license is granted by implication or otherwise under any patent or patent rights of STMicroelectronics. Specifications mentioned in this publication are subject to change without notice. This publication supersedes and replaces all information previously supplied. STMicroelectronics products are not authorized for use as critical components in life support devices or systems without express written approval of STMicroelectronics.

© The ST logo is a registered trademark of STMicroelectronics

© 2001 STMicroelectronics - Printed in Italy - All Rights Reserved
STMicroelectronics GROUP OF COMPANIES
Australia - Brazil - China - Finland - France - Germany - Hong Kong - India - Italy - Japan - Malaysia - Malta - Morocco
Singapore - Spain - Sweden - Switzerland - United Kingdom
© **http://www.st.com**