74VHCT374A

OCTAL D-TYPE FLIP FLOP WITH 3 STATE OUTPUTS NON INVERTING

- HIGH SPEED:
  f_{MAX} = 180 MHz (TYP.) at V_{CC} = 5V
- LOW POWER DISSIPATION:
  I_{CC} = 4 µA (MAX.) at T_A=25°C
- COMPATIBLE WITH TTL OUTPUTS:
  V_{IH} = 2V (MIN.), V_{IL} = 0.8V (MAX)
- POWER DOWN PROTECTION ON INPUTS & OUTPUTS
- SYMMETRICAL OUTPUT IMPEDANCE:
  $|I_{OH}| = I_{OL}$ = 8 mA (MIN)
- BALANCED PROPAGATION DELAYS:
  $t_{PLH} \cong t_{PHL}$
- OPERATING VOLTAGE RANGE:
  V_{CC}(OPR) = 4.5V to 5.5V
- PIN AND FUNCTION COMPATIBLE WITH 74 SERIES 374
- IMPROVED LATCH-UP IMMUNITY
- LOW NOISE: V_{OLP} = 0.9V (MAX.)

SOP TSSOP

ORDER CODES

PACKAGE	TUBE	T & R
SOP	74VHCT374AM	74VHCT374AMTR
TSSOP		74VHCT374ATTR

DESCRIPTION

The 74VHCT374A is an advanced high-speed CMOS OCTAL D-TYPE FLIP FLOP with 3 STATE OUTPUTS NON INVERTING fabricated with sub-micron silicon gate and double-layer metal wiring C^2MOS technology.

These 8 bit D-type flip-flop is controlled by a clock input (CK) and an output enable input ($\overline{OE}$).

On the positive transition of the clock, the Q outputs will be set to the logic state that were setup at the D inputs.

When the ($\overline{OE}$) input is low, the 8 outputs will be in a normal logic state (high or low logic level) and when ($\overline{OE}$) is in high level, the outputs will be in a high impedance state.

The Output control does not affect the internal operation of flip flops; that is, the old data can be retained or the new data can be entered even while the outputs are off.

Power down protection is provided on all inputs and outputs and 0 to 7V can be accepted on inputs with no regard to the supply voltage. This device can be used to interface 5V to 3V since all inputs are equipped with TTL threshold.

All inputs and outputs are equipped with protection circuits against static discharge, giving them 2KV ESD immunity and transient excess voltage.

PIN CONNECTION AND IEC LOGIC SYMBOLS

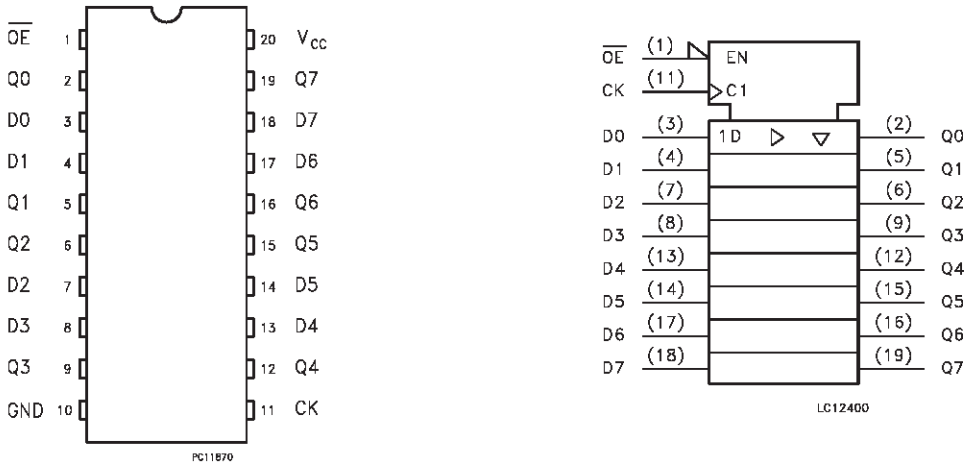

INPUT EQUIVALENT CIRCUIT

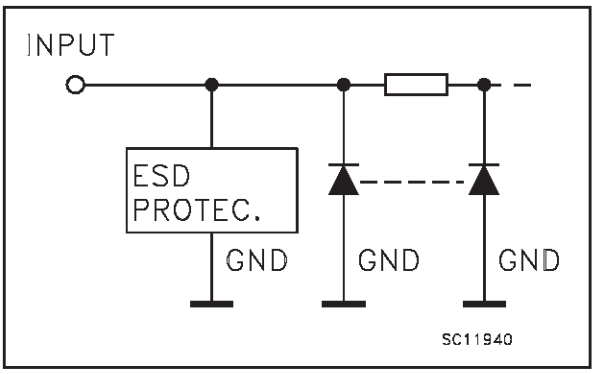

PIN DESCRIPTION

PIN No	SYMBOL	NAME AND FUNCTION
1	$\overline{OE}$	3 State Output Enable Input (Active LOW)
2, 5, 6, 9, 12, 15, 16, 19	Q0 to Q7	3-State Outputs
3, 4, 7, 8, 13, 14, 17, 18	D0 to D7	Data Inputs
11	CLOCK	Clock Input (LOW to HIGH, edge triggered
10	GND	Ground (0V)
20	V_{CC}	Positive Supply Voltage

TRUTH TABLE

INPUTS			OUTPUT
$\overline{OE}$	CK	D	Q
H	X	X	Z
L	↓	X	NO CHANGE
L	↑	L	L
L	↑	H	H

X : Don't Care
Z : High Impedance

LOGIC DIAGRAM

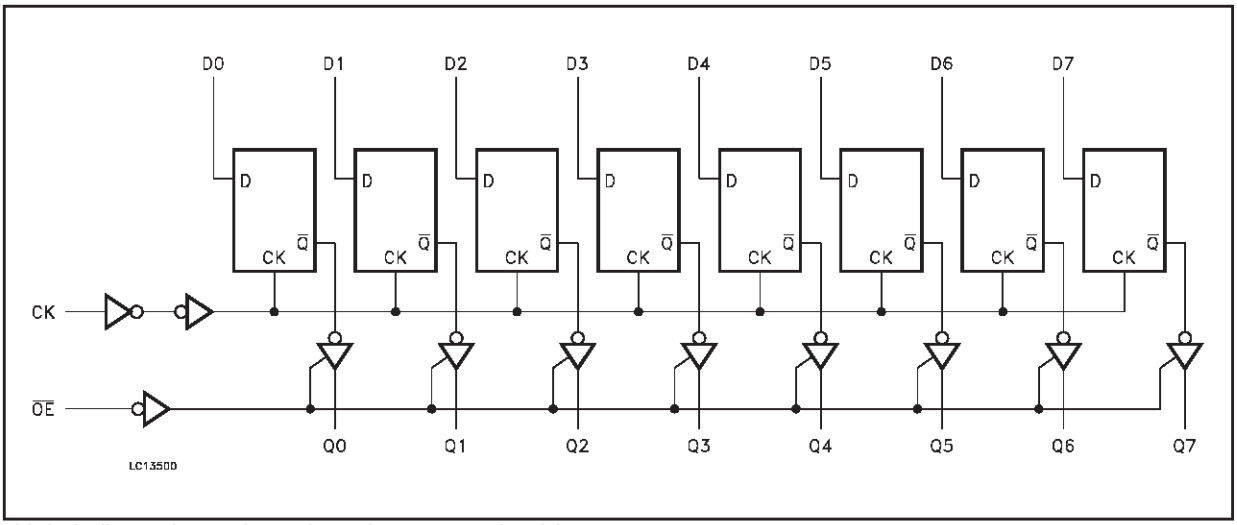

This logic diagram has not be used to estimate propagation delays

ABSOLUTE MAXIMUM RATINGS

Symbol	Parameter	Value	Unit
V_{CC}	Supply Voltage	-0.5 to +7.0	V
V_I	DC Input Voltage	-0.5 to +7.0	V
V_O	DC Output Voltage (see note 1)	-0.5 to +7.0	V
V_O	DC Output Voltage (see note 2)	-0.5 to V_{CC} + 0.5	V
I_{IK}	DC Input Diode Current	- 20	mA
I_{OK}	DC Output Diode Current	± 20	mA
I_O	DC Output Current	± 25	mA
I_{CC} or I_{GND}	DC V_{CC} or Ground Current	± 50	mA
T_{stg}	Storage Temperature	-65 to +150	°C
T_L	Lead Temperature (10 sec)	300	°C

Absolute Maximum Ratings are those values beyond which damage to the device may occur. Functional operation under these conditions is not implied
1) Output in OFF State
2) High or Low State

RECOMMENDED OPERATING CONDITIONS

Symbol	Parameter	Value	Unit
V_{CC}	Supply Voltage	4.5 to 5.5	V
V_I	Input Voltage	0 to 5.5	V
V_O	Output Voltage (see note 1)	0 to 5.5	V
V_O	Output Voltage (see note 2)	0 to V_{CC}	V
T_{op}	Operating Temperature	-55 to 125	°C
dt/dv	Input Rise and Fall Time (see note 3) (V_{CC} = 5.0 ± 0.5V)	0 to 20	ns/V

1) Output in OFF State
2) High or Low State
3) VIN from 0.8V to 2V

DC SPECIFICATIONS

Symbol	Parameter	Test Condition		Value							Unit
		V_{CC} (V)		T_A = 25°C			-40 to 85°C		-55 to 125°C		
				Min.	Typ.	Max.	Min.	Max.	Min.	Max.	
V_{IH}	High Level Input Voltage	4.5 to 5.5		2			2		2		V
V_{IL}	Low Level Input Voltage	4.5 to 5.5				0.8		0.8		0.8	V
V_{OH}	High Level Output Voltage	4.5	I_O=-50 µA	4.4	4.5		4.4		4.4		V
		4.5	I_O=-8 mA	3.94			3.8		3.7		
V_{OL}	Low Level Output Voltage	4.5	I_O=50 µA		0.0	0.1		0.1		0.1	V
		4.5	I_O=8 mA			0.36		0.44		0.55	
Ioz	High Impedance Output Leakege Current	4.5 to 5.5	$V_I = V_{IH}$ or V_{IL} V_O = 0V or 5.5V			±0.25		± 2.5		± 2.5	µA
I_I	Input Leakage Current	0 to 5.5	V_I = 5.5V or GND			± 0.1		± 1.0		± 1.0	µA
I_{CC}	Quiescent Supply Current	5.5	$V_I = V_{CC}$ or GND			4		40		40	µA
I_{CC}	Additional Worst Case Supply Current	5.5	One Input at 3.4V, other input at V_{CC} or GND			1.35		1.5		1.5	mA
I_{OPD}	Output Leakage Current	0	V_{OUT} = 5.5V			0.5		5.0		5.0	µA

AC ELECTRICAL CHARACTERISTICS (Input $t_r = t_f$ = 3ns)

Symbol	Parameter	Test Condition			Value							Unit
		V_{CC} (V)	C_L (pF)		T_A = 25°C			-40 to 85°C		-55 to 125°C		
					Min.	Typ.	Max.	Min.	Max.	Min.	Max.	
t_{PLH} t_{PHL}	Propagation Delay Time CK to Q	5.0(*)	15			5.6	9.4	1.0	10.5	1.0	10.5	ns
		5.0(*)	50			6.4	10.4	1.0	11.5	1.0	11.5	
t_{PZL} t_{PZH}	Output Enable Time	5.0(*)	15	RL = 1KΩ		6.2	10.2	1.0	11.5	1.0	11.5	ns
		5.0(*)	50			7.3	11.2	1.0	12.5	1.0	12.5	
t_{PLZ} t_{PHZ}	Output Disable Time	5.0(*)	50	RL = 1KΩ		7.0	11.2	1.0	12.0	1.0	12.0	ns
t_w	Clock Pulse Width HIGH or LOW	5.0(*)			6.5			6.5		6.5		ns
t_s	Setup Time D to CK HIGH or LOW	5.0(*)			2.0			2.0		2.0		ns
t_h	Hold Time D to CK HIGH or LOW	5.0(*)			1.5			1.5		1.5		ns
f_{MAX}	Maximum Clock Frequency	5.0(*)	15		90	180		80		80		MHz
		5.0(*)	50		85	170		75		75		
t_{OSLH} t_{OSHL}	Output to Output Skew time (note 1)	5.0(*)	50				1.0		1.0		1.0	ns

(*) Voltage range is 5.0V ± 0.5V
Note 1 : Parameter guaranteed by design. $t_{soLH} = |t_{pLHm} - t_{pLHn}|$, $t_{soHL} = |t_{pHLm} - t_{pHLn}|$

CAPACITIVE CHARACTERISTICS

Symbol	Parameter	Test Condition	Value							Unit
			T_A = 25°C			-40 to 85°C		-55 to 125°C		
			Min.	Typ.	Max.	Min.	Max.	Min.	Max.	
C_{IN}	Input Capacitance			7	10		10		10	pF
C_{OUT}	Output Capacitance			9						pF
C_{PD}	Power Dissipation Capacitance (note 1)			15						pF

1) C_{PD} is defined as the value of the IC's internal equivalent capacitance which is calculated from the operating current consumption without load. (Refer to Test Circuit). Average operating current can be obtained by the following equation. $I_{CC(opr)} = C_{PD} \times V_{CC} \times f_{IN} + I_{CC}/8$ (per Flip-Flop)

DYNAMIC SWITCHING CHARACTERISTICS

Symbol	Parameter	Test Condition		Value							Unit
		V_{CC} (V)		T_A = 25°C			-40 to 85°C		-55 to 125°C		
				Min.	Typ.	Max.	Min.	Max.	Min.	Max.	
V_{OLP}	Dynamic Low Voltage Quiet Output (note 1, 2)	5.0	C_L = 50 pF		0.6	0.9					V
V_{OLV}				-0.9	-0.6						
V_{IHD}	Dynamic High Voltage Input (note 1, 3)	5.0		2.0							
V_{ILD}	Dynamic Low Voltage Input (note 1, 3)	5.0				0.8					

1) Worst case package.
2) Max number of outputs defined as (n). Data inputs are driven 0V to 3.0V, (n-1) outputs switching and one output at GND.
3) Max number of data inputs (n) switching. (n-1) switching 0V to 3.0V. Inputs under test switching: 3.0V to threshold (V_{ILD}), 0V to threshold (V_{IHD}), f=1MHz.

TEST CIRCUIT

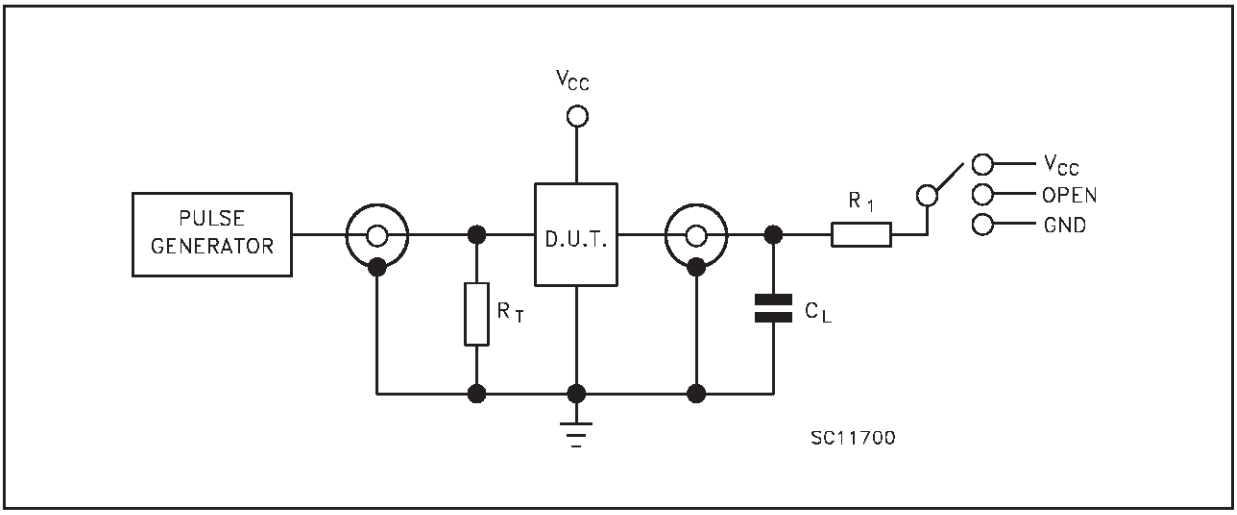

TEST	SWITCH
t_{PLH}, t_{PHL}	Open
t_{PZL}, t_{PLZ}	V_{CC}
t_{PZH}, t_{PHZ}	GND

C_L =15/50pF or equivalent (includes jig and probe capacitance)
R_L = R1 = 1KΩ or equivalent
R_T = Z_{OUT} of pulse generator (typically 50Ω)

WAVEFORM 1: PROPAGATION DELAYS, SETUP AND HOLD TIMES (f=1MHz; 50% duty cycle)

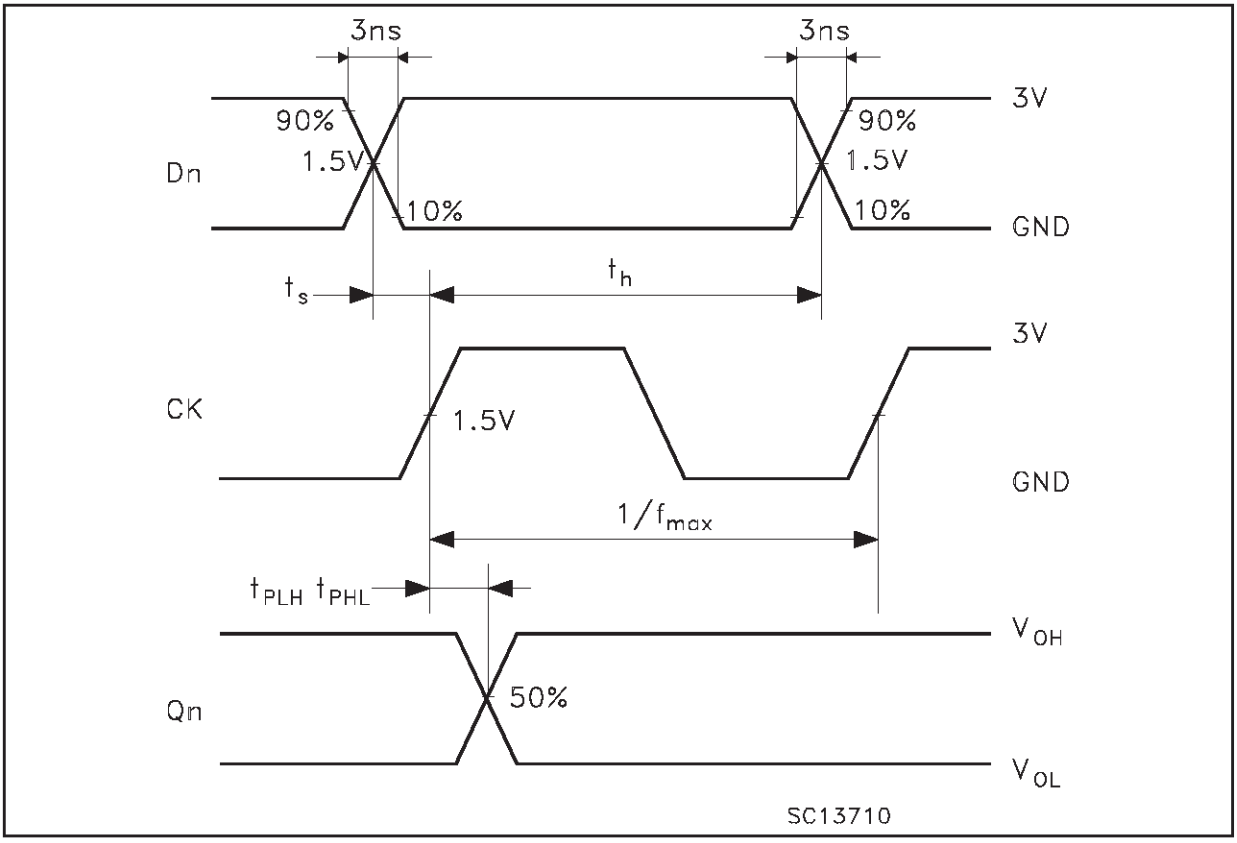

WAVEFORM 2: OUTPUT ENABLE AND DISABLE TIMES (f=1MHz; 50% duty cycle)

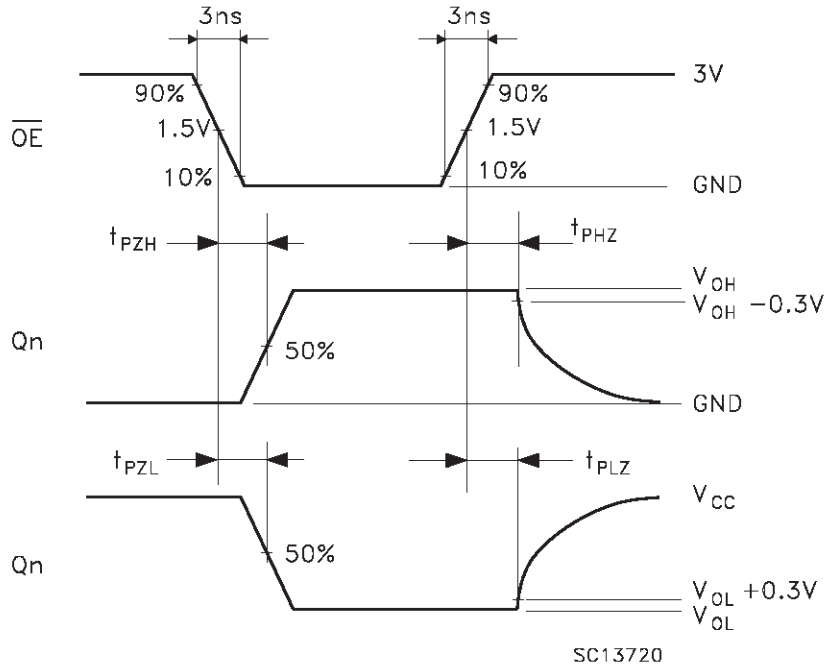

WAVEFORM 3: PULSE WIDTH (f=1MHz; 50% duty cycle)

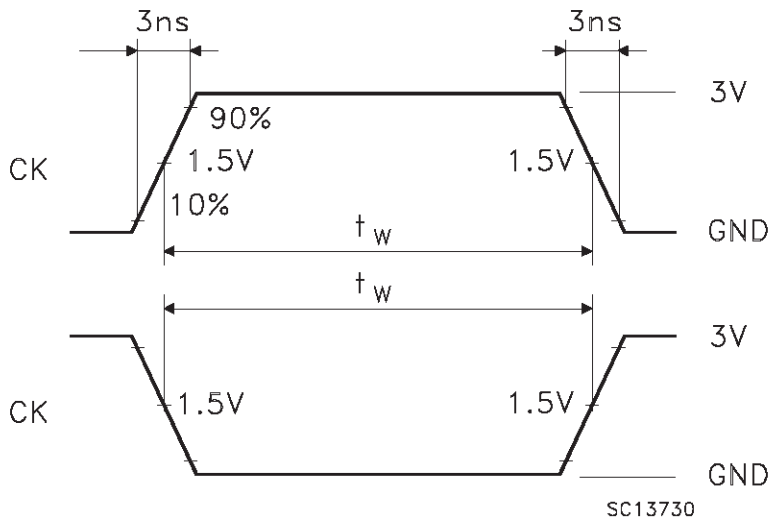

SO-20 MECHANICAL DATA

DIM.	mm.			inch		
	MIN.	TYP	MAX.	MIN.	TYP.	MAX.
A			2.65			0.104
a1	0.1		0.2	0.004		0.008
a2			2.45			0.096
b	0.35		0.49	0.014		0.019
b1	0.23		0.32	0.009		0.012
C		0.5			0.020	
c1	45° (typ.)					
D	12.60		13.00	0.496		0.512
E	10.00		10.65	0.393		0.419
e		1.27			0.050	
e3		11.43			0.450	
F	7.40		7.60	0.291		0.300
L	0.50		1.27	0.020		0.050
M			0.75			0.029
S	8° (max.)					

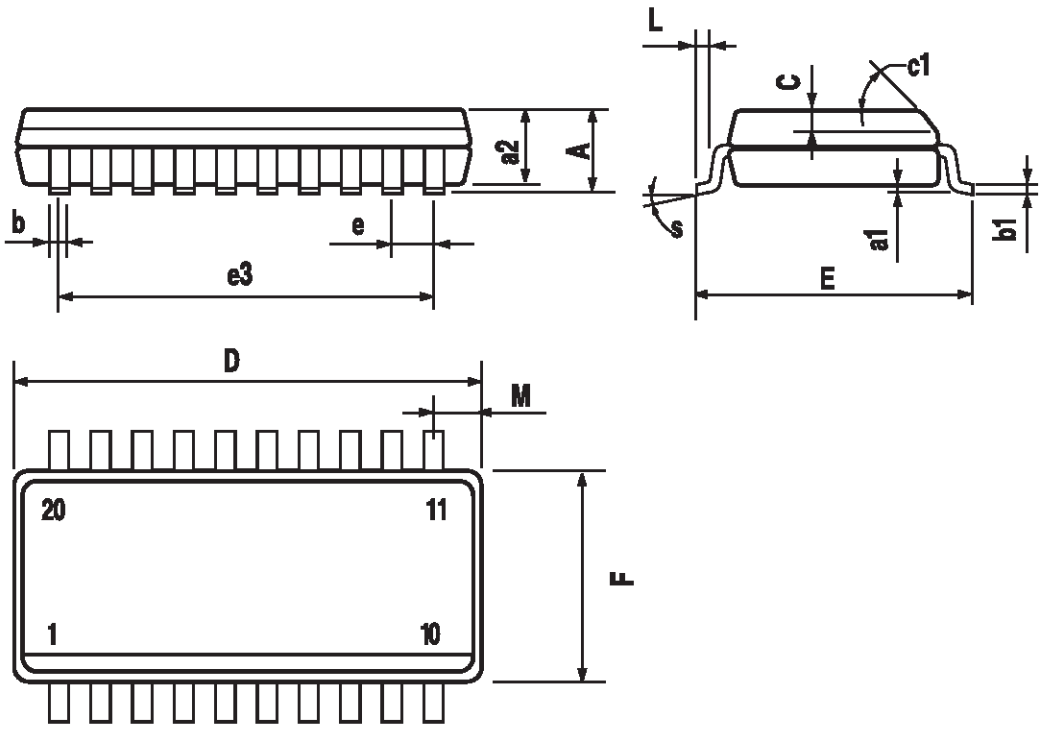

PO13L

TSSOP20 MECHANICAL DATA

DIM.	mm.			inch		
	MIN.	TYP	MAX.	MIN.	TYP.	MAX.
A			1.2			0.047
A1	0.05		0.15	0.002	0.004	0.006
A2	0.8	1	1.05	0.031	0.039	0.041
b	0.19		0.30	0.007		0.012
c	0.09		0.20	0.004		0.0089
D	6.4	6.5	6.6	0.252	0.256	0.260
E	6.2	6.4	6.6	0.244	0.252	0.260
E1	4.3	4.4	4.48	0.169	0.173	0.176
e		0.65 BSC			0.0256 BSC	
K	0°		8°	0°		8°
L	0.45	0.60	0.75	0.018	0.024	0.030