M74HC163

SYNCHRONOUS PRESETTABLE 4-BIT COUNTER

- HIGH SPEED :
  f_{MAX} = 62 MHz (TYP.) at V_{CC} = 6V
- LOW POWER DISSIPATION:
  I_{CC} =4µA(MAX.) at T_A=25°C
- HIGH NOISE IMMUNITY:
  $V_{NIH} = V_{NIL}$ = 28 % V_{CC} (MIN.)
- SYMMETRICAL OUTPUT IMPEDANCE:
  $|I_{OH}| = I_{OL}$ = 4mA (MIN)
- BALANCED PROPAGATION DELAYS:
  $t_{PLH} \cong t_{PHL}$
- WIDE OPERATING VOLTAGE RANGE:
  V_{CC} (OPR) = 2V to 6V
- PIN AND FUNCTION COMPATIBLE WITH 74 SERIES 163

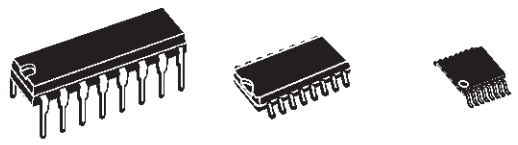

DIP SOP TSSOP

ORDER CODES

PACKAGE	TUBE	T & R
DIP	M74HC163B1R	
SOP	M74HC163M1R	M74HC163RM13TR
TSSOP		M74HC163TTR

DESCRIPTION

The M74HC163 is an high speed CMOS SYNCHRONOUS 4 BIT BINARY PRESETTABLE COUNTER fabricated with silicon gate C^2MOS technology.

The CLOCK input is active on the rising edge. Both $\overline{LOAD}$ and $\overline{CLEAR}$ inputs are active LOW. Presetting is synchronous on the rising edge of the clock, the function is synchronous to the CLOCK. Two enable inputs (TE and PE) and CARRY output are provided to enable easy cascading of counters, which facilities easy implementation of N-bit counters without using external gates.

All inputs are equipped with protection circuits against static discharge and transient excess voltage.

PIN CONNECTION AND IEC LOGIC SYMBOLS

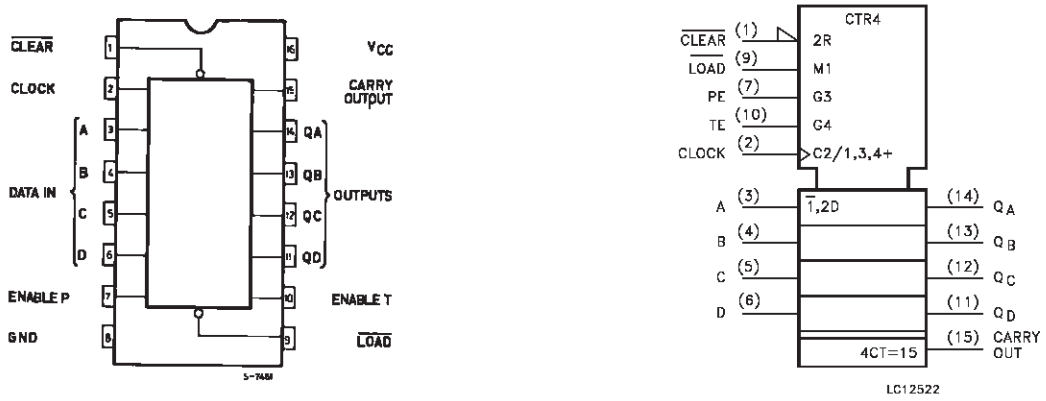

INPUT AND OUTPUT EQUIVALENT CIRCUIT

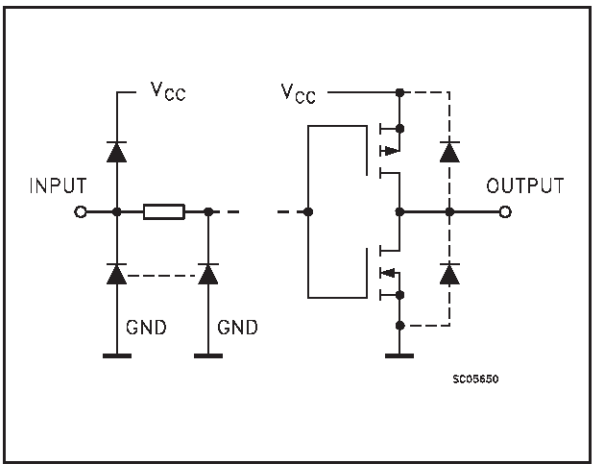

PIN DESCRIPTION

PIN No	SYMBOL	NAME AND FUNCTION
1	$\overline{CLEAR}$	Asynchronous Master Reset
2	CLOCK	Clock Input (LOW to HIGH, Edge-triggered)
3, 4, 5, 6	A, B, C, D	Data Inputs
7	PE	Count Enable Input
10	TE	Count Enable Carry Input
9	$\overline{LOAD}$	Parallel Enable Input
14, 13, 12, 11	QA to QD	Flip Flop Outputs
15	CARRY	Terminal Count Output
8	GND	Ground (0V)
16	Vcc	Positive Supply Voltage

TRUTH TABLE

INPUTS					OUTPUTS				FUNCTION
$\overline{CLEAR}$	$\overline{LOAD}$	PE	TE	CLOCK	QA	QB	QC	QD	
L	X	X	X	↑	L	L	L	L	RESET TO ”0”
H	L	X	X	↑	A	B	C	D	PRESET DATA
H	H	X	L	↑	NO CHANGE				NO COUNT
H	H	L	X	↑	NO CHANGE				NO COUNT
H	H	H	H	↑	COUNT UP				COUNT
H	X	X	X	↓	NO CHANGE				NO COUNT

X : Don’t Care
A, B, C, D : Logic level of data inputs
Carry : CARRY = $TE \cdot Q_A \cdot Q_B \cdot Q_C \cdot Q_D$

LOGIC DIAGRAM

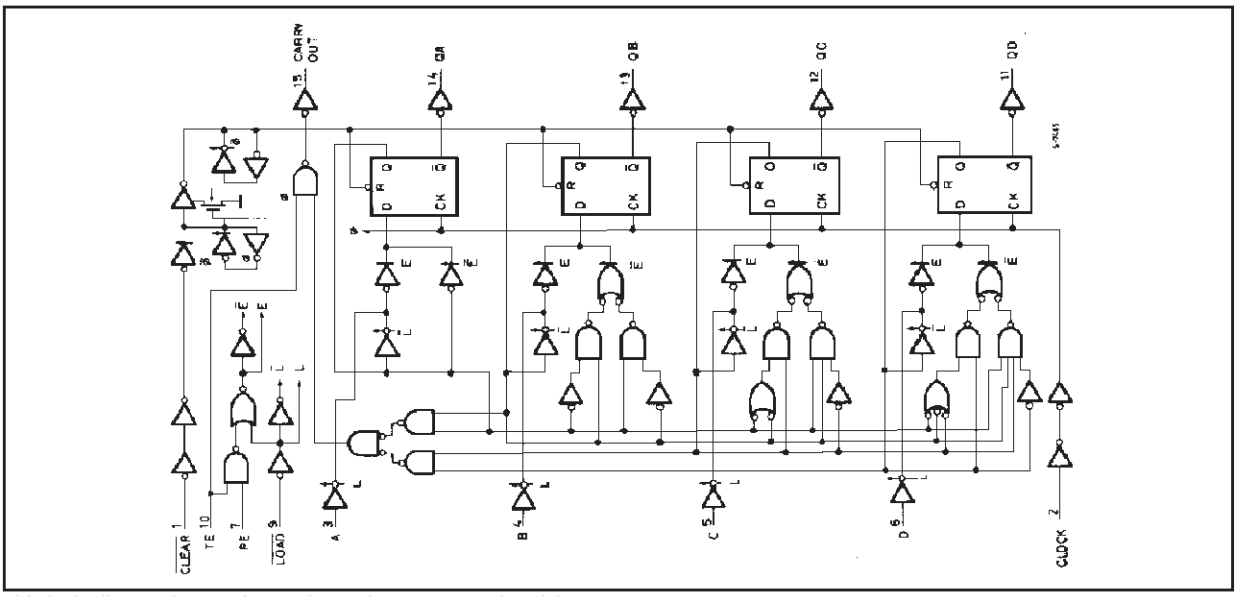

This logic diagram has not be used to estimate propagation delays

TIMING CHART

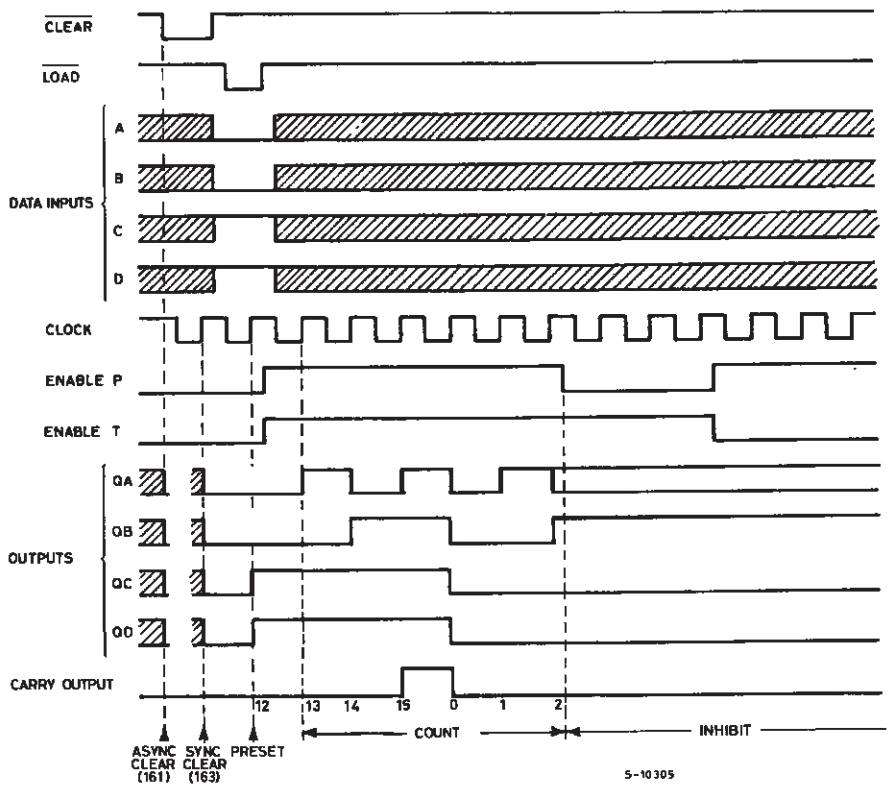

ABSOLUTE MAXIMUM RATINGS

Symbol	Parameter	Value	Unit
V_{CC}	Supply Voltage	-0.5 to +7	V
V_I	DC Input Voltage	-0.5 to V_{CC} + 0.5	V
V_O	DC Output Voltage	-0.5 to V_{CC} + 0.5	V
I_{IK}	DC Input Diode Current	± 20	mA
I_{OK}	DC Output Diode Current	± 20	mA
I_O	DC Output Current	± 25	mA
I_{CC} or I_{GND}	DC V_{CC} or Ground Current	± 50	mA
P_D	Power Dissipation	500(*)	mW
T_{stg}	Storage Temperature	-65 to +150	°C
T_L	Lead Temperature (10 sec)	300	°C

Absolute Maximum Ratings are those values beyond which damage to the device may occur. Functional operation under these conditions is not implied
(*) 500mW at 65 °C; derate to 300mW by 10mW/°C from 65°C to 85°C

RECOMMENDED OPERATING CONDITIONS

Symbol	Parameter		Value	Unit
V_{CC}	Supply Voltage		2 to 6	V
V_I	Input Voltage		0 to V_{CC}	V
V_O	Output Voltage		0 to V_{CC}	V
T_{op}	Operating Temperature		-55 to 125	°C
t_r, t_f	Input Rise and Fall Time	V_{CC} = 2.0V	0 to 1000	ns
		V_{CC} = 4.5V	0 to 500	ns
		V_{CC} = 6.0V	0 to 400	ns

DC SPECIFICATIONS

Symbol	Parameter	Test Condition		Value							Unit
		V_{CC} (V)		T_A = 25°C			-40 to 85°C		-55 to 125°C		
				Min.	Typ.	Max.	Min.	Max.	Min.	Max.	
V_{IH}	High Level Input Voltage	2.0		1.5			1.5		1.5		V
		4.5		3.15			3.15		3.15		
		6.0		4.2			4.2		4.2		
V_{IL}	Low Level Input Voltage	2.0				0.5		0.5		0.5	V
		4.5				1.35		1.35		1.35	
		6.0				1.8		1.8		1.8	
V_{OH}	High Level Output Voltage	2.0	I_O=-20 µA	1.9	2.0		1.9		1.9		V
		4.5	I_O=-20 µA	4.4	4.5		4.4		4.4		
		6.0	I_O=-20 µA	5.9	6.0		5.9		5.9		
		4.5	I_O=-4.0 mA	4.18	4.31		4.13		4.10		
		6.0	I_O=-5.2 mA	5.68	5.8		5.63		5.60		
V_{OL}	Low Level Output Voltage	2.0	I_O=20 µA		0.0	0.1		0.1		0.1	V
		4.5	I_O=20 µA		0.0	0.1		0.1		0.1	
		6.0	I_O=20 µA		0.0	0.1		0.1		0.1	
		4.5	I_O=4.0 mA		0.17	0.26		0.33		0.40	
		6.0	I_O=5.2 mA		0.18	0.26		0.33		0.40	
I_I	Input Leakage Current	6.0	V_I = V_{CC} or GND			± 0.1		± 1		± 1	µA
I_{CC}	Quiescent Supply Current	6.0	V_I = V_{CC} or GND			4		40		80	µA

AC ELECTRICAL CHARACTERISTICS (C_L = 50 pF, Input t_r = t_f = 6ns)

Symbol	Parameter	Test Condition		Value							Unit
		V_{CC} (V)		T_A = 25°C			-40 to 85°C		-55 to 125°C		
				Min.	Typ.	Max.	Min.	Max.	Min.	Max.	
t_{TLH} t_{THL}	Output Transition Time	2.0			25	75		95		110	ns
		4.5			7	15		19		22	
		6.0			6	13		16		19	
t_{PLH} t_{PHL}	Propagation Delay Time (CLOCK - Q)	2.0			48	125		155		190	ns
		4.5			16	25		31		38	
		6.0			14	21		26		32	
t_{PLH} t_{PHL}	Propagation Delay Time (CLOCK - CARRY)	2.0			57	150		190		225	ns
		4.5			19	30		38		45	
		6.0			16	26		32		38	
t_{PLH} t_{PHL}	Propagation Delay Time (TE - CARRY)	2.0			39	100		125		150	ns
		4.5			13	20		25		30	
		6.0			11	17		21		26	
t_{PHL}	Propagation Delay Time ($\overline{CLEAR}$-Q)	2.0			72	200		250		300	ns
		4.5			24	40		50		60	
		6.0			20	34		43		51	
t_{PHL}	Propagation Delay Time ($\overline{CLEAR}$ - CARRY)	2.0			39	100		125		150	ns
		4.5			13	20		25		30	
		6.0			11	17		21		26	
f_{MAX}	Maximum Clock Frequency	2.0		6.2	18		5		4.2		MHz
		4.5		31	53		25		21		
		6.0		37	62		30		25		
$t_{W(H)}$ $t_{W(L)}$	Minimum Pulse Width (CLOCK)	2.0			18	75		95		110	ns
		4.5			6	15		19		22	
		6.0			6	13		16		19	
t_S	Minimum Set-up Time ($\overline{LOAD}$, PE, TE)	2.0			40	100		125		150	ns
		4.5			10	20		25		30	
		6.0			8	17		21		26	
t_S	Minimum Set-up Time (A, B, C, D)	2.0			20	75		95		110	ns
		4.5			5	15		19		22	
		6.0			3	13		16		19	
t_S	Minimum Set-up Time ($\overline{CLEAR}$)	2.0			20	75		95		110	ns
		4.5			5	15		19		22	
		6.0			3	13		16		19	
t_h	Minimum Hold Time (A, B - CLOCK)	2.0				0		0		0	ns
		4.5				0		0		0	
		6.0				0		0		0	
t_{REM}	Minimum Removal Time	2.0			18	50		65		75	ns
		4.5			4	10		13		15	
		6.0			3	9		11		13	

CAPACITIVE CHARACTERISTICS

Symbol	Parameter	Test Condition		Value							Unit
		V_{CC} (V)		T_A = 25°C			-40 to 85°C		-55 to 125°C		
				Min.	Typ.	Max.	Min.	Max.	Min.	Max.	
C_{IN}	Input Capacitance	5.0			5	10		10		10	pF
C_{PD}	Power Dissipation Capacitance (note 1)	5.0			50						pF

1) C_{PD} is defined as the value of the IC's internal equivalent capacitance which is calculated from the operating current consumption without load. (Refer to Test Circuit). Average operating current can be obtained by the following equation. $I_{CC(opr)} = C_{PD} \times V_{CC} \times f_{IN} + I_{CC}$

TEST CIRCUIT

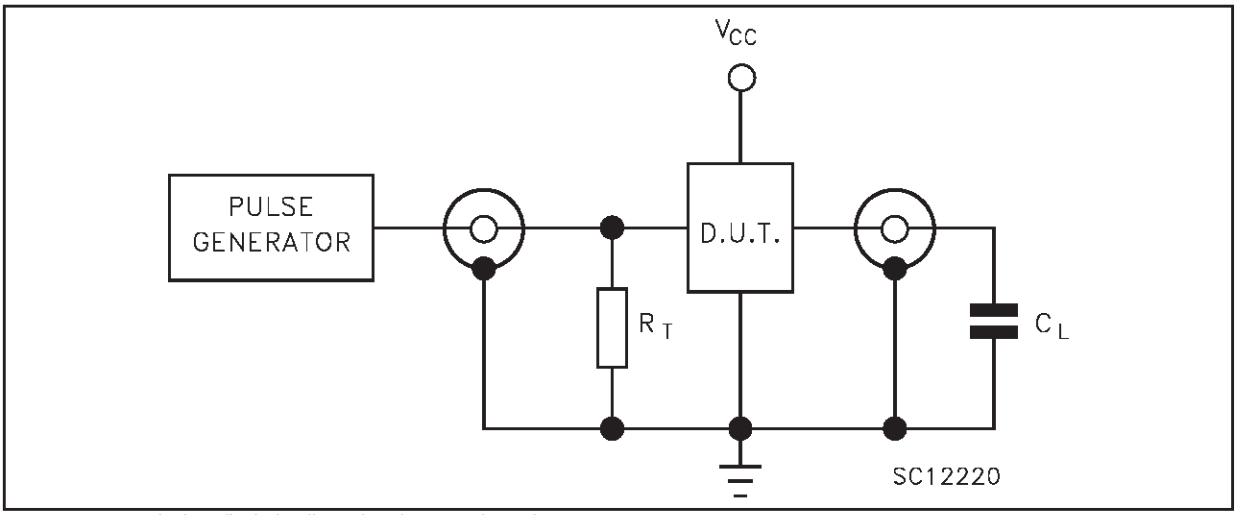

C_L = 50pF or equivalent (includes jig and probe capacitance)
$R_T = Z_{OUT}$ of pulse generator (typically 50Ω)

WAVEFORM 1: PROPAGATION DELAY TIMES, MINIMUM PULSE WIDTH (COUNT MODE)
(f=1MHz; 50% duty cycle)

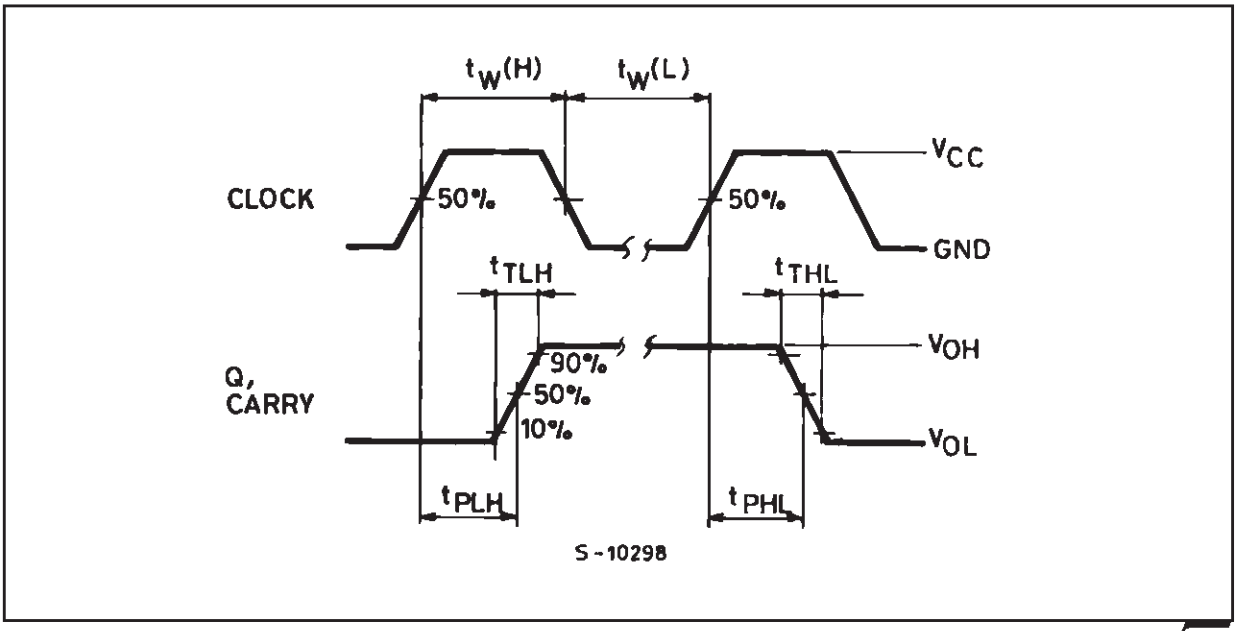

WAVEFORM 2 : SETUP AND HOLD TIMES (CLEAR MODE) (f=1MHz; 50% duty cycle)

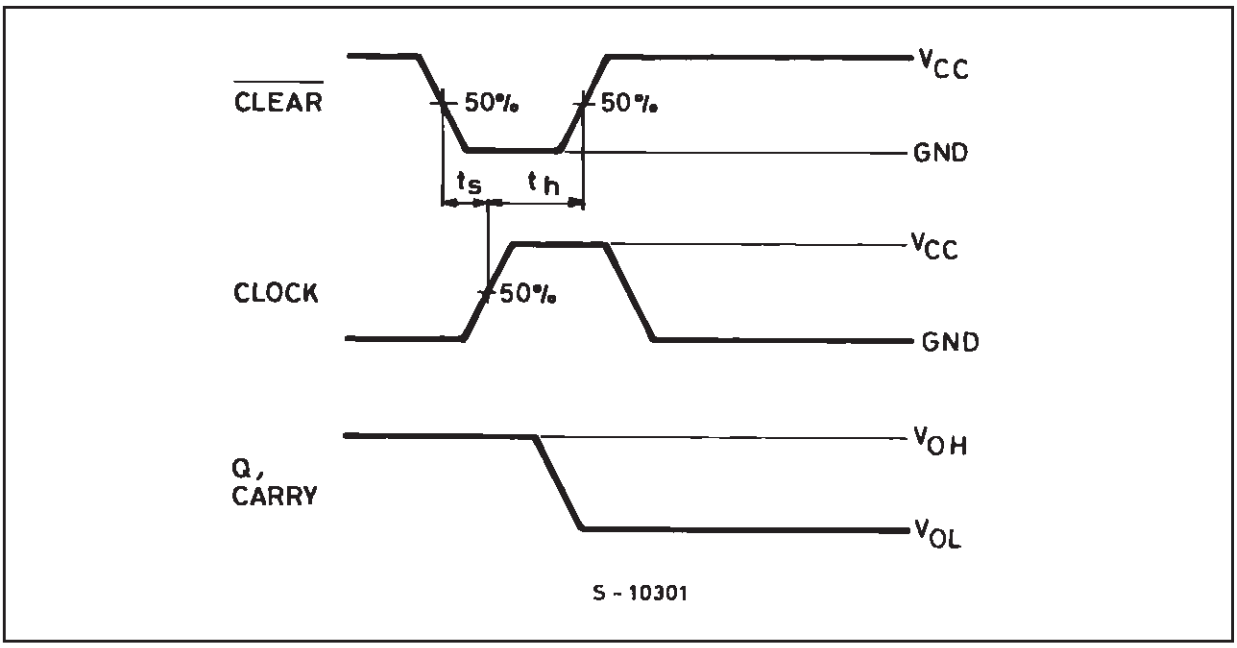

WAVEFORM 3 : SETUP AND HOLD TIMES (PRESET MODE) (f=1MHz; 50% duty cycle)

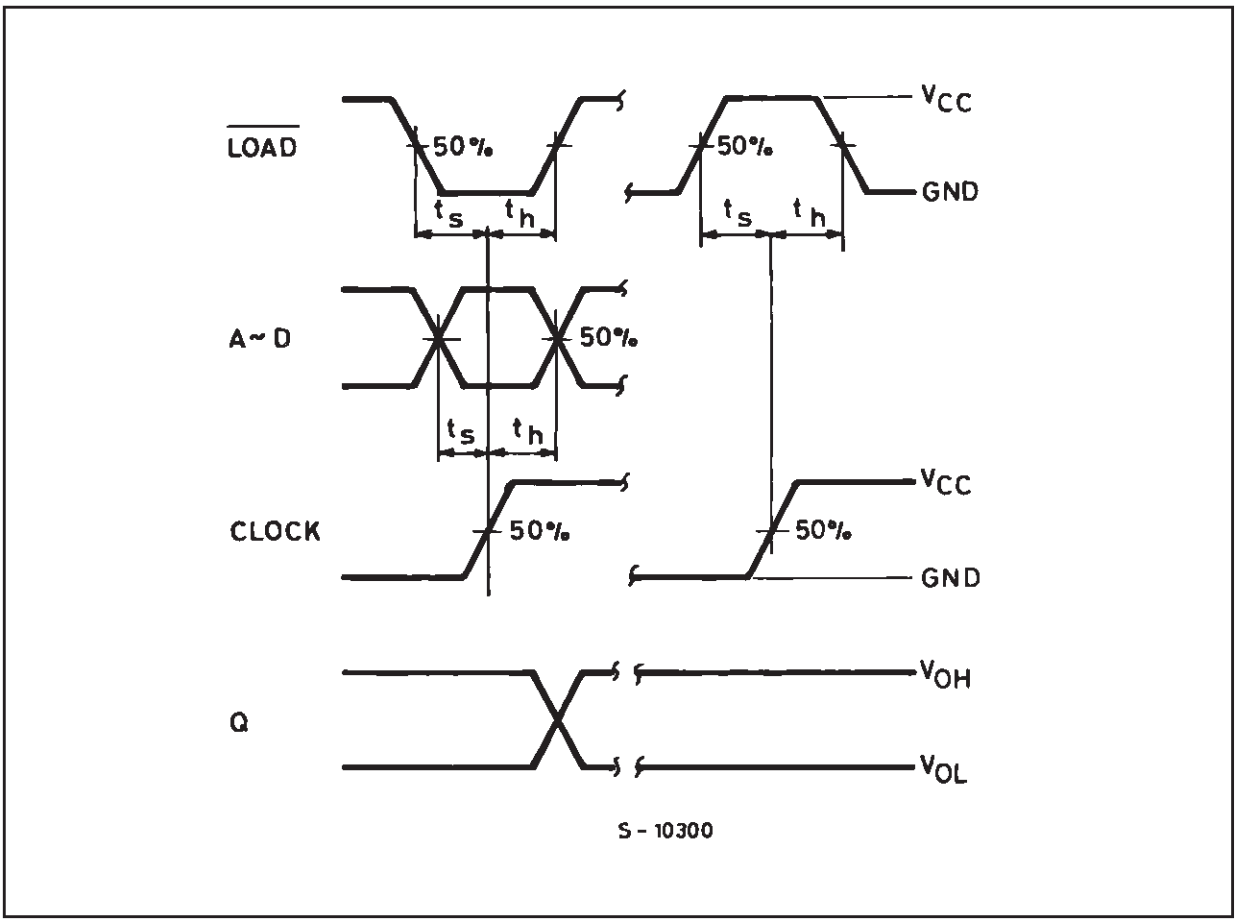

WAVEFORM 4 : SETUP AND HOLD TIMES (COUNTENABLE MODE) (f=1MHz; 50% duty cycle)

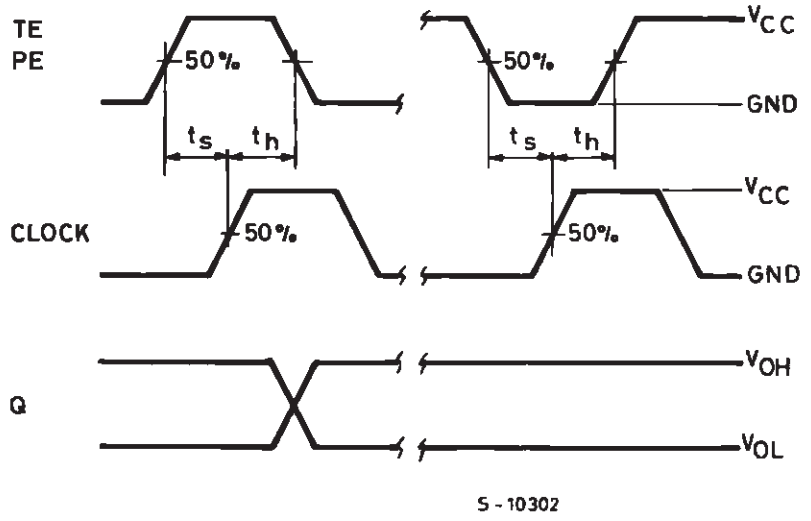

WAVEFORM 5 : PROPAGATION DELAY TIMES (CASCADE MODE) (f=1MHz; 50% duty cycle)

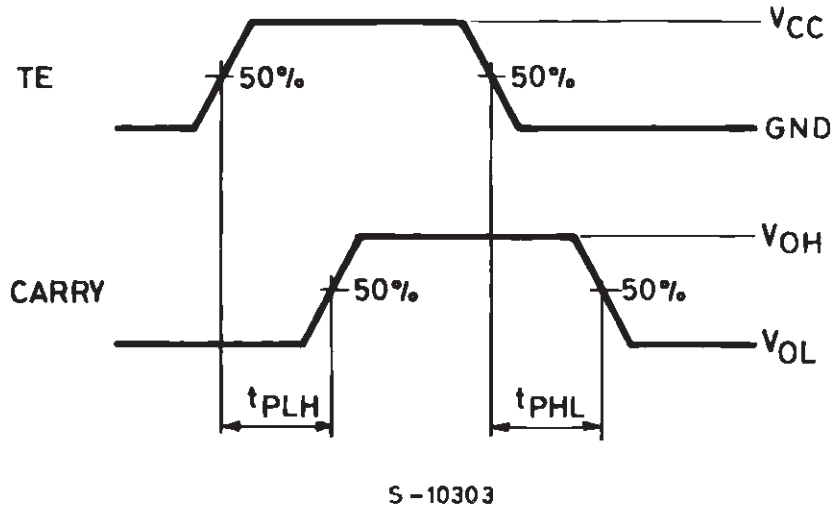

Plastic DIP-16 (0.25) MECHANICAL DATA

DIM.	mm.			inch		
	MIN.	TYP	MAX.	MIN.	TYP.	MAX.
a1	0.51			0.020		
B	0.77		1.65	0.030		0.065
b		0.5			0.020	
b1		0.25			0.010	
D			20			0.787
E		8.5			0.335	
e		2.54			0.100	
e3		17.78			0.700	
F			7.1			0.280
I			5.1			0.201
L		3.3			0.130	
Z			1.27			0.050

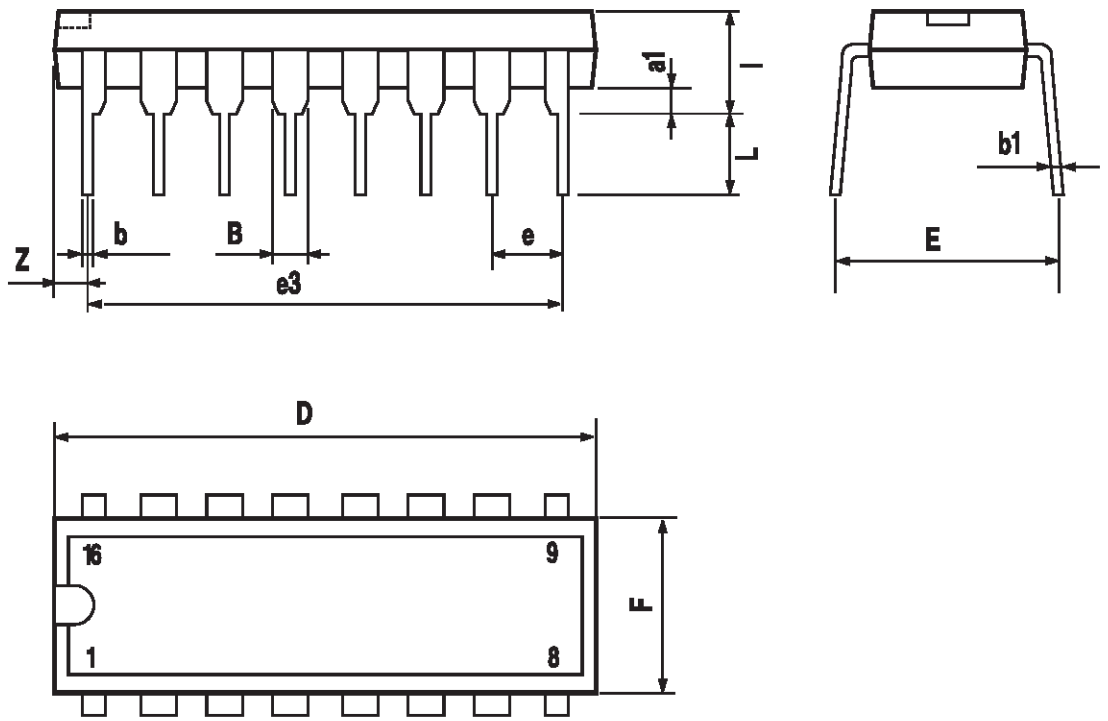

P001C

SO-16 MECHANICAL DATA

DIM.	mm.			inch		
	MIN.	TYP	MAX.	MIN.	TYP.	MAX.
A			1.75			0.068
a1	0.1		0.2	0.003		0.007
a2			1.65			0.064
b	0.35		0.46	0.013		0.018
b1	0.19		0.25	0.007		0.010
C		0.5			0.019	
c1	45° (typ.)					
D	9.8		10	0.385		0.393
E	5.8		6.2	0.228		0.244
e		1.27			0.050	
e3		8.89			0.350	
F	3.8		4.0	0.149		0.157
G	4.6		5.3	0.181		0.208
L	0.5		1.27	0.019		0.050
M			0.62			0.024
S	8° (max.)					

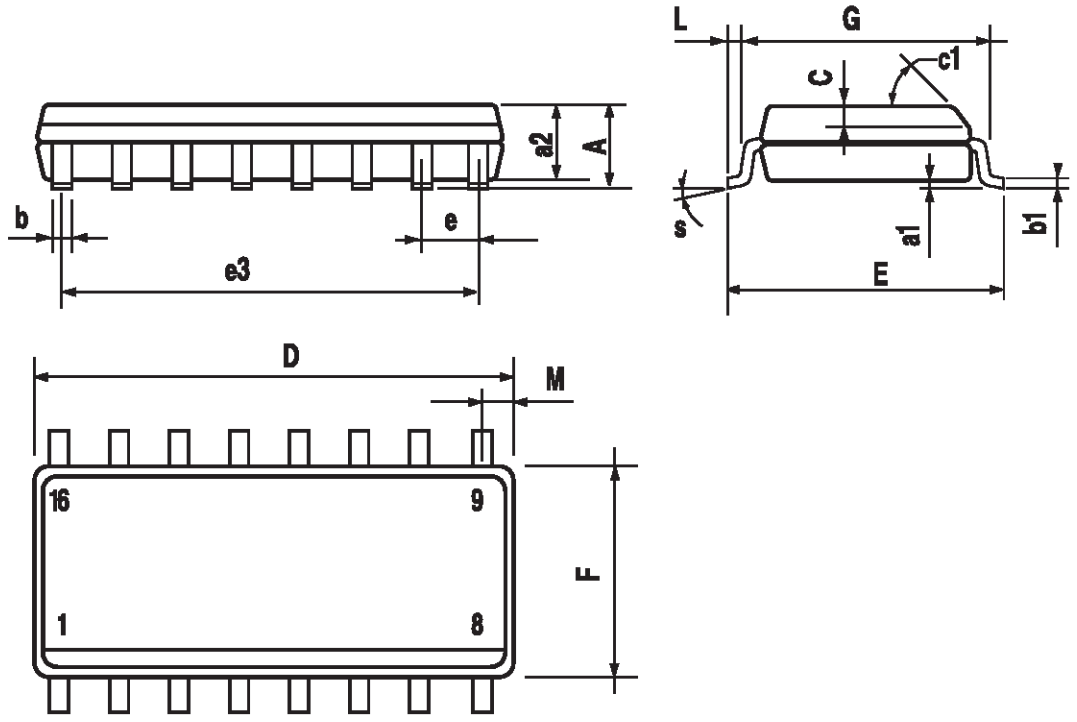

PO13H

TSSOP16 MECHANICAL DATA

DIM.	mm.			inch		
	MIN.	TYP	MAX.	MIN.	TYP.	MAX.
A			1.2			0.047
A1	0.05		0.15	0.002	0.004	0.006
A2	0.8	1	1.05	0.031	0.039	0.041
b	0.19		0.30	0.007		0.012
c	0.09		0.20	0.004		0.0089
D	4.9	5	5.1	0.193	0.197	0.201
E	6.2	6.4	6.6	0.244	0.252	0.260
E1	4.3	4.4	4.48	0.169	0.173	0.176
e		0.65 BSC			0.0256 BSC	
K	0°		8°	0°		8°
L	0.45	0.60	0.75	0.018	0.024	0.030

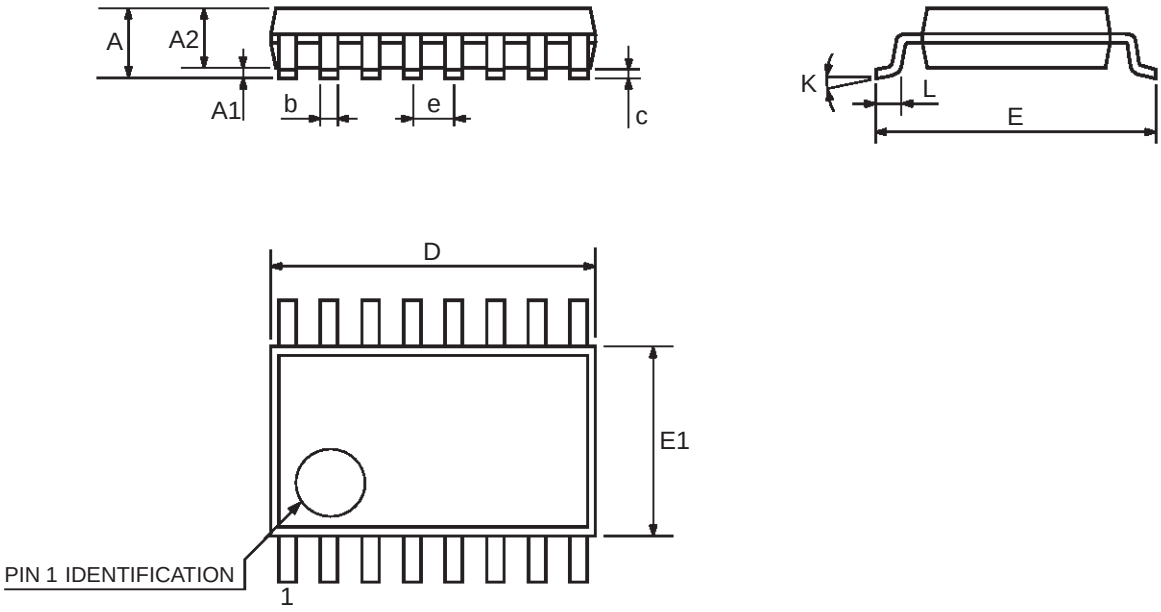

0080338D

Information furnished is believed to be accurate and reliable. However, STMicroelectronics assumes no responsibility for the consequences of use of such information nor for any infringement of patents or other rights of third parties which may result from its use. No license is granted by implication or otherwise under any patent or patent rights of STMicroelectronics. Specifications mentioned in this publication are subject to change without notice. This publication supersedes and replaces all information previously supplied. STMicroelectronics products are not authorized for use as critical components in life support devices or systems without express written approval of STMicroelectronics.

© The ST logo is a registered trademark of STMicroelectronics

© 2001 STMicroelectronics - Printed in Italy - All Rights Reserved
STMicroelectronics GROUP OF COMPANIES
Australia - Brazil - China - Finland - France - Germany - Hong Kong - India - Italy - Japan - Malaysia - Malta - Morocco
Singapore - Spain - Sweden - Switzerland - United Kingdom
© **http://www.st.com**