STB45NF3LL

N-CHANNEL 30V - 0.014Ω - 45A D^2PAK
STripFET II™ POWER MOSFET

TYPE	V_{DSS}	$R_{DS(on)}$	I_D
STB45NF3LL	30V	<0.018Ω	45A

- TYPICAL R_{DS}(on) = 0.016Ω @4.5V
- OPTIMAL RDS(ON) x Qg TRADE-OFF @ 4.5V
- CONDUCTION LOSSES REDUCED
- SWITCHING LOSSES REDUCED

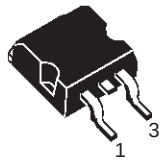

D^2PAK

ADD SUFFIX "T4" FOR ORDERING IN TAPE & REEL

DESCRIPTION

This application specific Power MOSFET is the third genaration of STMicroelectronics unique "Single Feature Size™" strip-based process. The resulting transistor shows the best trade-off between on-resistance ang gate charge. When used as high and low side in buck regulators, it gives the best performance in terms of both conduction and switching losses. This is extremely important for motherboards where fast switching and high efficiency are of paramount importance.

INTERNAL SCHEMATIC DIAGRAM

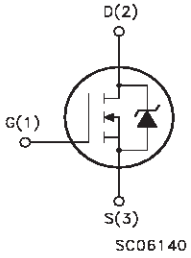

APPLICATIONS

- SPECIFICALLY DESIGNED AND OPTIMISED FOR HIGH EFFICIENCY DC/DC CONVERTERS

ABSOLUTE MAXIMUM RATINGS

Symbol	Parameter	Value	Unit
V_{DS}	Drain-source Voltage (V_{GS} = 0)	30	V
V_{DGR}	Drain-gate Voltage (R_{GS} = 20 kΩ)	30	V
V_{GS}	Gate- source Voltage	± 16	V
I_D	Drain Current (continuos) at T_C = 25°C	45	A
I_D	Drain Current (continuos) at T_C = 100°C	32	A
I_{DM} (●)	Drain Current (pulsed)	180	A
P_{TOT}	Total Dissipation at T_C = 25°C	70	W
	Derating Factor	0.46	W/°C
E_{AS} (1)	Single Pulse Avalanche Energy	241	mJ
T_{stg}	Storage Temperature	– 55 to 175	°C
T_j	Max. Operating Junction Temperature		

(●) Pulse width limited by safe operating area

(1) Starting T_j= 25°C, I_D= 22.5A, V_{DD}= 24V

THERMAL DATA

Rthj-case	Thermal Resistance Junction-case Max	2.14	°C/W
Rthj-amb	Thermal Resistance Junction-ambient Max	62.5	°C/W
T_l	Maximum Lead Temperature For Soldering Purpose	300	°C

ELECTRICAL CHARACTERISTICS (TCASE = 25 °C UNLESS OTHERWISE SPECIFIED)

OFF

Symbol	Parameter	Test Conditions	Min.	Typ.	Max.	Unit
$V_{(BR)DSS}$	Drain-source Breakdown Voltage	I_D = 250 µA, V_{GS} = 0	30			V
I_{DSS}	Zero Gate Voltage Drain Current (V_{GS} = 0)	V_{DS} = Max Rating			1	µA
		V_{DS} = Max Rating, T_C = 125 °C			10	µA
I_{GSS}	Gate-body Leakage Current (V_{DS} = 0)	V_{GS} = ± 16 V			±100	nA

ON (1)

Symbol	Parameter	Test Conditions	Min.	Typ.	Max.	Unit
$V_{GS(th)}$	Gate Threshold Voltage	V_{DS} = V_{GS}, I_D = 250µA	1			V
$R_{DS(on)}$	Static Drain-source On Resistance	V_{GS} = 10 V, I_D = 22.5 A		0.014	0.018	Ω
		V_{GS} = 4.5V, I_D = 22.5 A		0.016	0.020	Ω

DYNAMIC

Symbol	Parameter	Test Conditions	Min.	Typ.	Max.	Unit
g_{fs} (1)	Forward Transconductance	V_{DS} =15 V , I_D = 22.5 A		20		S
C_{iss}	Input Capacitance	V_{DS} = 25V, f = 1 MHz, V_{GS} = 0		800		pF
C_{oss}	Output Capacitance			250		pF
C_{rss}	Reverse Transfer Capacitance			60		pF

ELECTRICAL CHARACTERISTICS (CONTINUED)

SWITCHING ON

Symbol	Parameter	Test Conditions	Min.	Typ.	Max.	Unit
$t_{d(on)}$ t_r	Turn-on Delay Time Rise Time	V_{DD} = 15 V, I_D = 22.5A R_G = 4.7Ω V_{GS} = 4.5V (Resistive Load, see Fig. 3)		17 100		ns ns
Q_g Q_{gs} Q_{gd}	Total Gate Charge Gate-Source Charge Gate-Drain Charge	V_{DD} = 24V, I_D = 45A, V_{GS} = 5V		12.5 4.6 5.2	17	nC nC nC

SWITCHING OFF

Symbol	Parameter	Test Conditions	Min.	Typ.	Max.	Unit
$t_{d(off)}$ t_f	Turn-off-Delay Time Fall Time	V_{DD} = 15V, I_D = 22.5A, R_G = 4.7Ω, V_{GS} = 4.5V (Resistive Load, see Fig. 3)		20 21		ns ns

SOURCE DRAIN DIODE

Symbol	Parameter	Test Conditions	Min.	Typ.	Max.	Unit
I_{SD} I_{SDM} (2)	Source-drain Current Source-drain Current (pulsed)				45 180	A A
V_{SD} (1)	Forward On Voltage	I_{SD} = 45A, V_{GS} = 0			1.3	V
t_{rr} Q_{rr} I_{RRM}	Reverse Recovery Time Reverse Recovery Charge Reverse Recovery Current	I_{SD} = 45A, di/dt = 100A/µs, V_{DD} = 15V, T_j = 150°C (see test circuit, Figure 5)		35 44 2.5		ns nC A

Note: 1. Pulsed: Pulse duration = 300 µs, duty cycle 1.5 %.
2. Pulse width limited by safe operating area.

Safe Operating Area

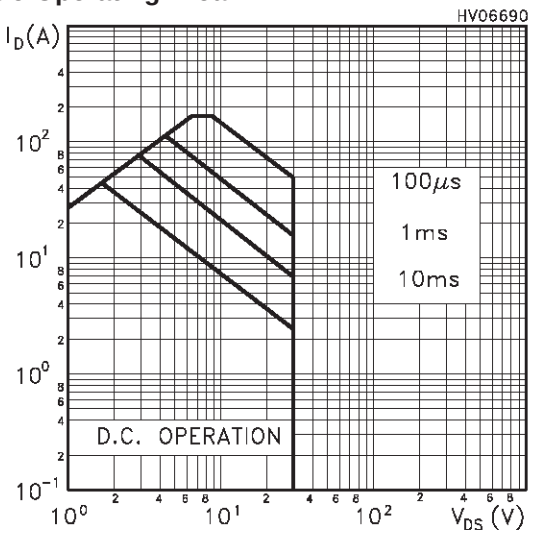

Thermal Impedance

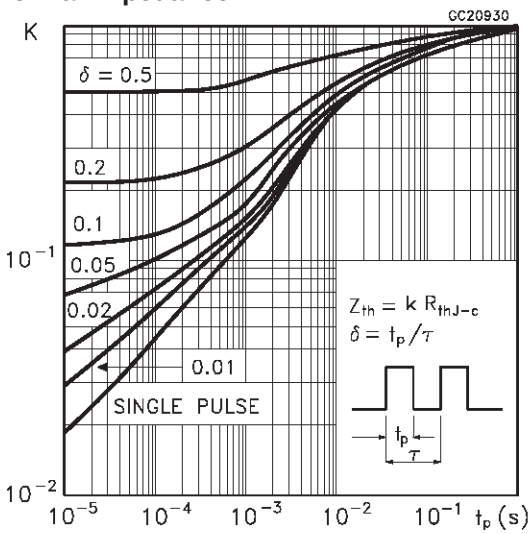

Output Characteristics

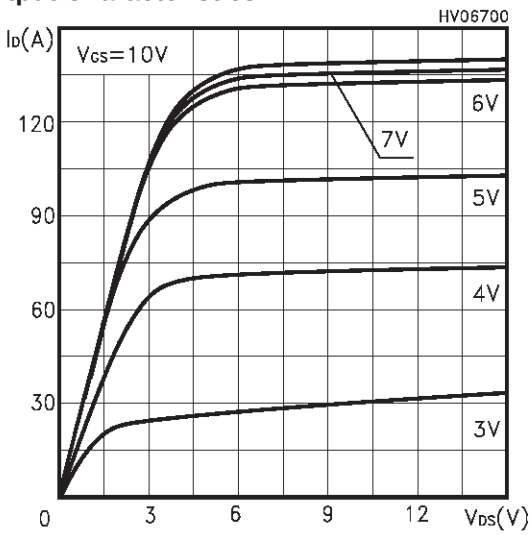

Transfer Characteristics

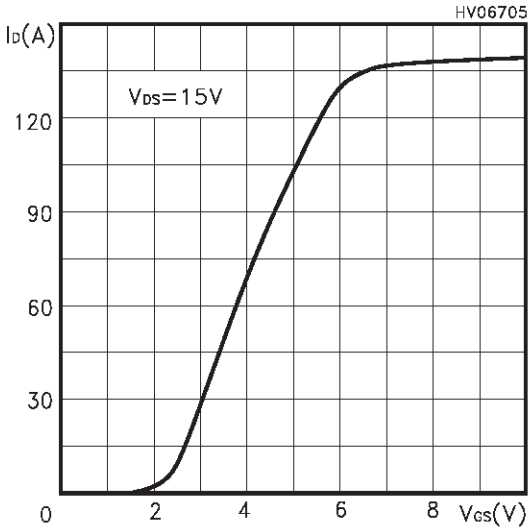

Transconductance

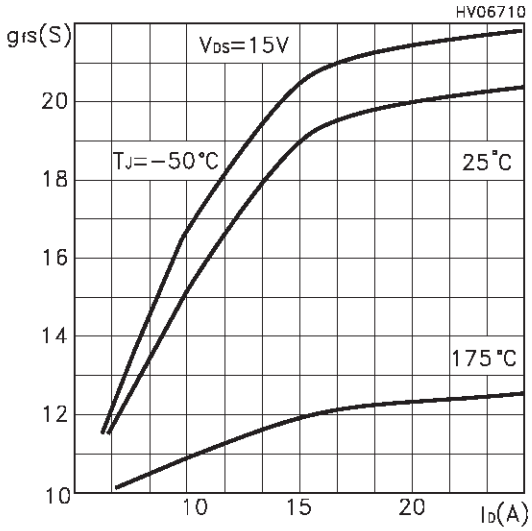

Static Drain-source On Resistance

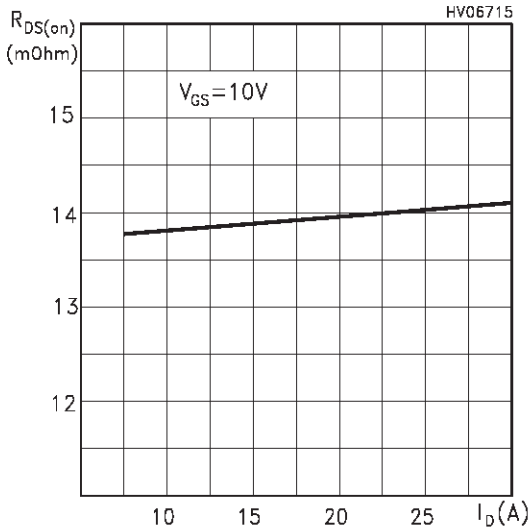

Gate Charge vs Gate-source Voltage

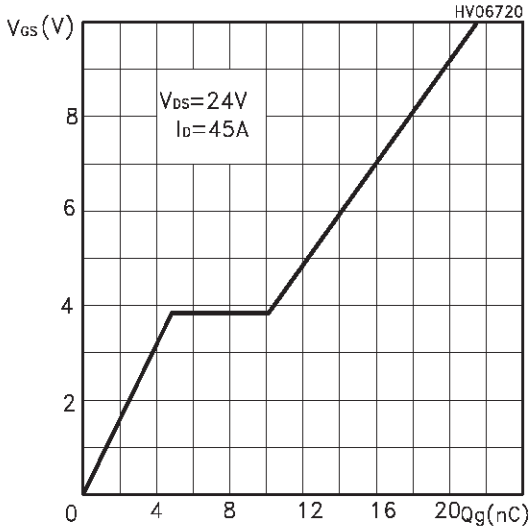

Capacitance Variations

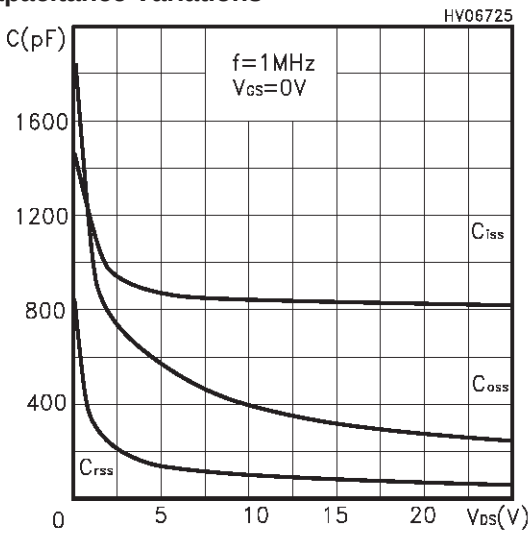

Normalized Gate Thereshold Voltage vs Temp.

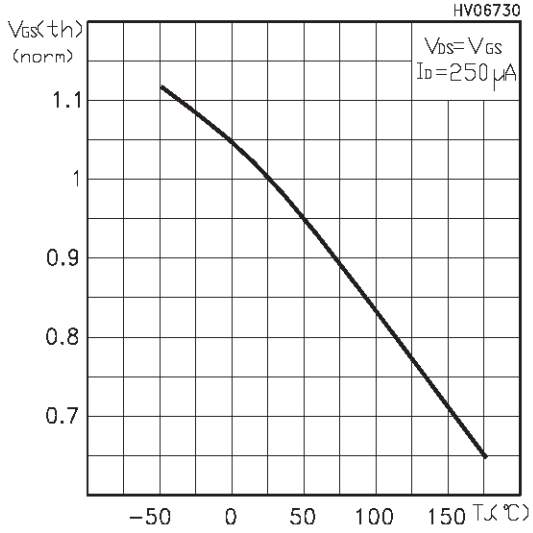

Normalized On Resistance vs Temperature

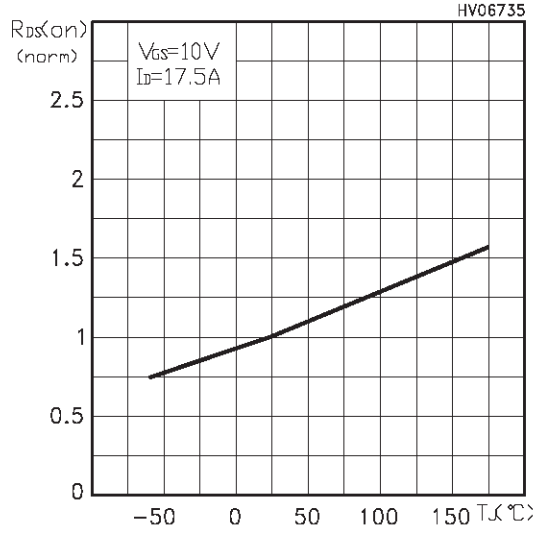

Source-drain Diode Forward Characteristics

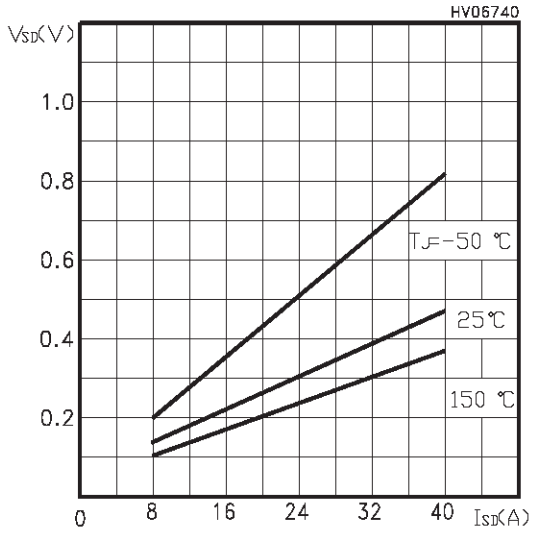

Normalized Breakdown Voltage vs Tj

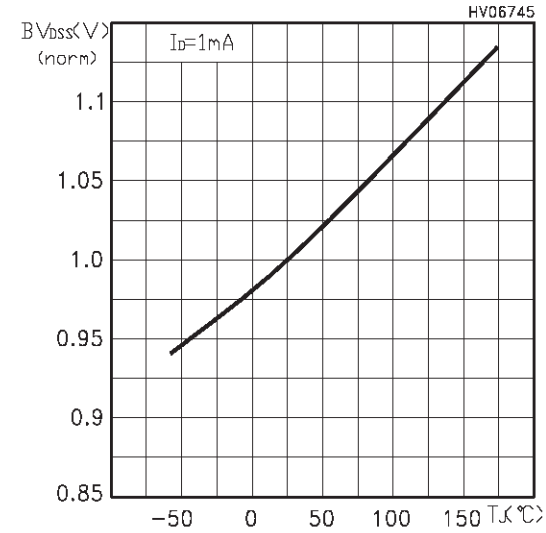

Fig. 1: Unclamped Inductive Load Test Circuit

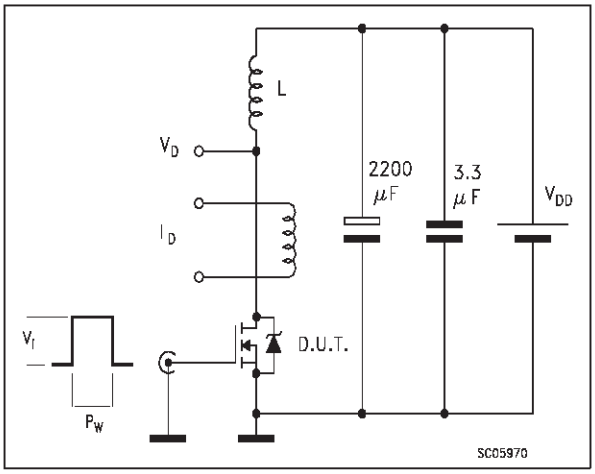

Fig. 2: Unclamped Inductive Waveform

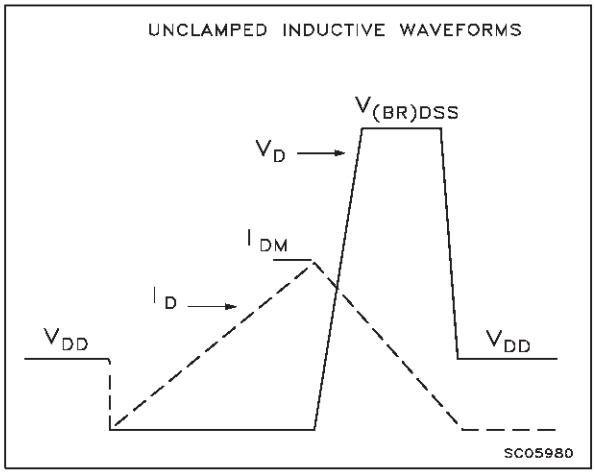

Fig. 3: Switching Times Test Circuit For Resistive Load

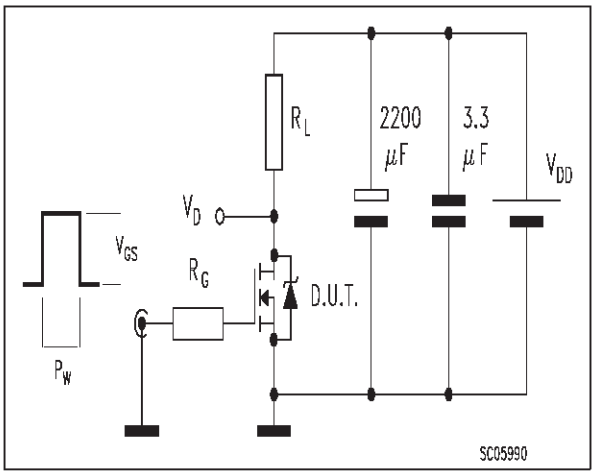

Fig. 4: Gate Charge test Circuit

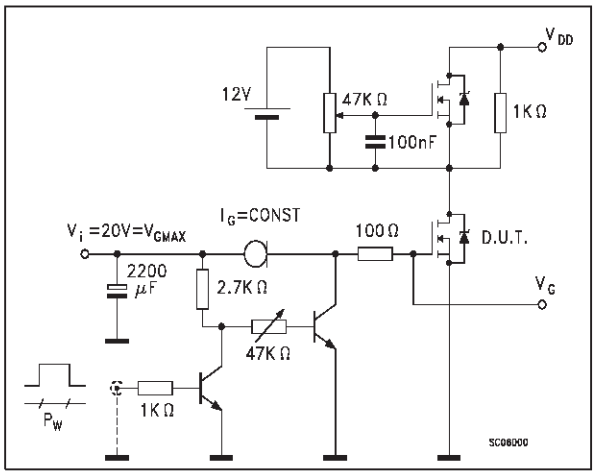

Fig. 5: Test Circuit For Inductive Load Switching And Diode Recovery Times

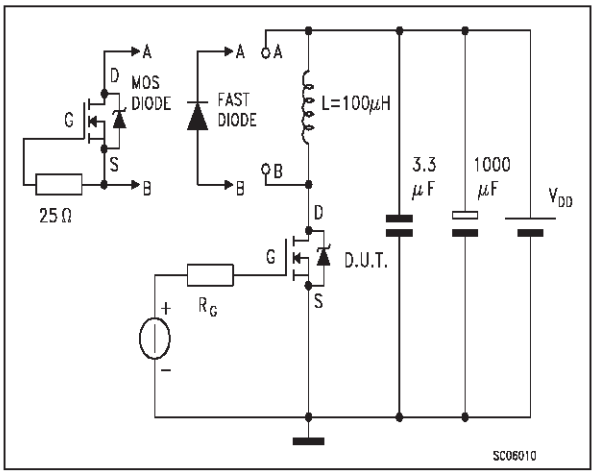

D²PAK MECHANICAL DATA

DIM.	mm.			inch		
	MIN.	TYP	MAX.	MIN.	TYP.	MAX.
A	4.4		4.6	0.173		0.181
A1	2.49		2.69	0.098		0.106
A2	0.03		0.23	0.001		0.009
B	0.7		0.93	0.027		0.036
B2	1.14		1.7	0.044		0.067
C	0.45		0.6	0.017		0.023
C2	1.23		1.36	0.048		0.053
D	8.95		9.35	0.352		0.368
D1		8			0.315	
E	10		10.4	0.393		
E1		8.5			0.334	
G	4.88		5.28	0.192		0.208
L	15		15.85	0.590		0.625
L2	1.27		1.4	0.050		0.055
L3	1.4		1.75	0.055		0.068
M	2.4		3.2	0.094		0.126
R		0.4			0.015	
V2	0º		8º			

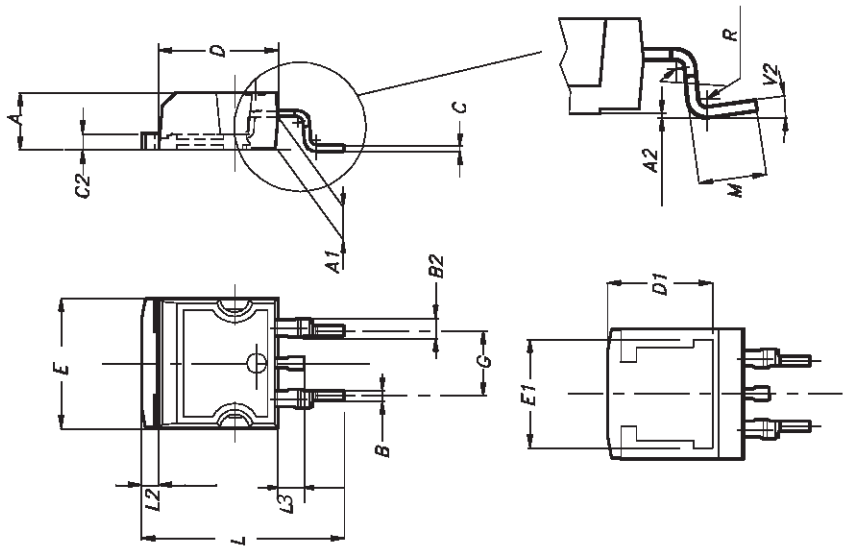

D²PAK FOOTPRINT

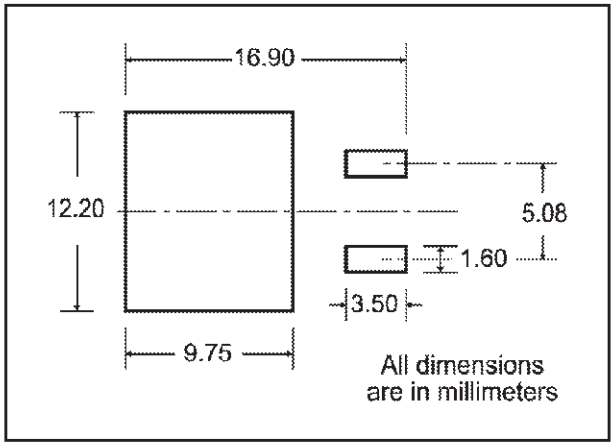

TUBE SHIPMENT (no suffix)*

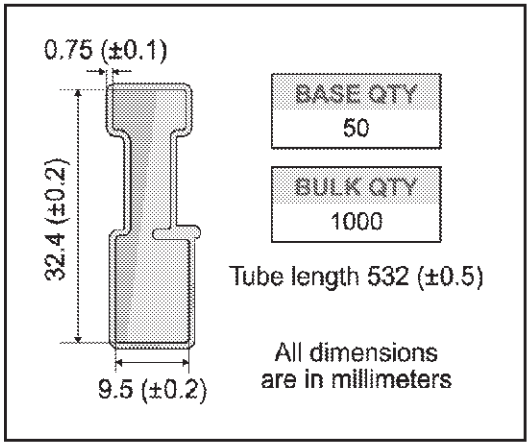

TAPE AND REEL SHIPMENT (suffix "T4")*

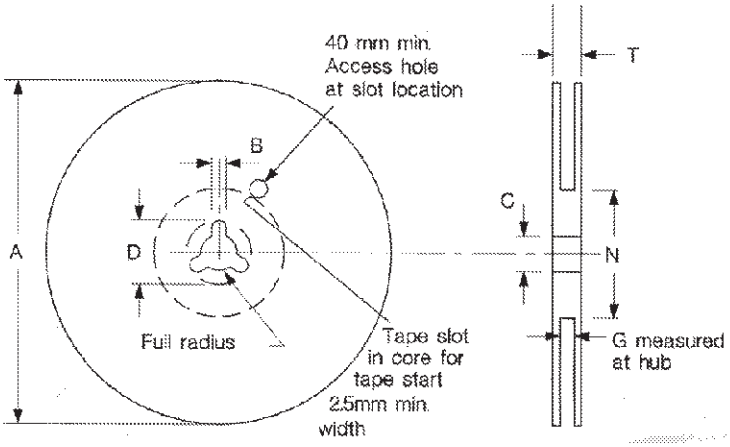

REEL MECHANICAL DATA

DIM.	mm		inch	
	MIN.	MAX.	MIN.	MAX.
A		330		12.992
B	1.5		0.059	
C	12.8	13.2	0.504	0.520
D	20.2		0795	
G	24.4	26.4	0.960	1.039
N	100		3.937	
T		30.4		1.197

BASE QTY	BULK QTY
1000	1000

TAPE MECHANICAL DATA

DIM.	mm		inch	
	MIN.	MAX.	MIN.	MAX.
A0	10.5	10.7	0.413	0.421
B0	15.7	15.9	0.618	0.626
D	1.5	1.6	0.059	0.063
D1	1.59	1.61	0.062	0.063
E	1.65	1.85	0.065	0.073
F	11.4	11.6	0.449	0.456
K0	4.8	5.0	0.189	0.197
P0	3.9	4.1	0.153	0.161
P1	11.9	12.1	0.468	0.476
P2	1.9	2.1	0.075	0.082
R	50		1.574	
T	0.25	0.35	0.0098	0.0137
W	23.7	24.3	0.933	0.956

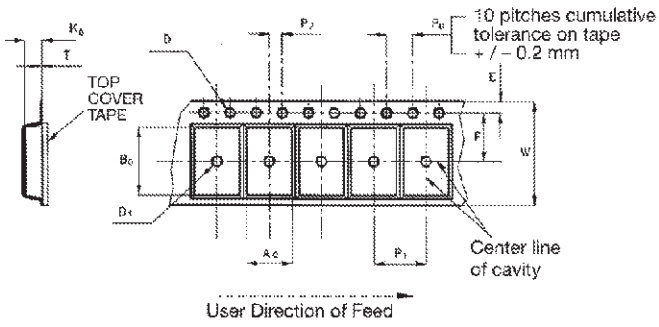

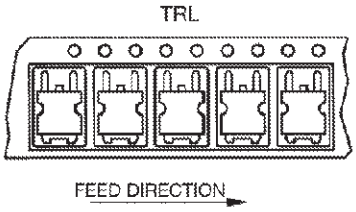

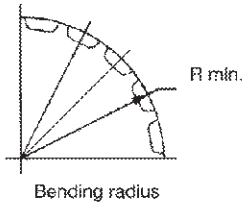

* on sales type