M74HCT4053

TRIPLE 2-CHANNEL ANALOG MULTIPLEXER/DEMULTIPLEXER

- LOW POWER DISSIPATION:
  I_{CC} = 4µA (MAX.) at T_A=25°C
- LOGIC LEVEL TRANSLATION TO ENABLE TTL LOGIC SIGNAL TO COMMUNICATE WITH ±5V ANALOG SIGNAL
- LOW "ON" RESISTANCE:
  70Ω TYP. (V_{CC} - V_{EE} = 4.5V)
  50Ω TYP. (V_{CC} - V_{EE} = 9V)
- WIDE ANALOG INPUT VOLTAGE RANGE: ±6V
- FAST SWITCHING:
  t_{pd} = 13ns (TYP.) at T_A = 25 °C
- LOW CROSSTALK BETWEEN SWITCHES
- HIGH ON/OFF OUTPUT VOLTAGE RATIO
- WIDE OPERATING SUPPLY VOLTAGE RANGE (V_{CC} - V_{EE}) = 2V TO 12V
- LOW SINE WAVE DISTORTION:
  0.02% at V_{CC} - V_{EE} = 9V
- COMPATIBLE WITH TTL OUTPUTS:
  V_{IH} = 2V(MIN.) V_{IL} = 0.8V (MAX.)
- PIN AND FUNCTION COMPATIBLE WITH 74 SERIES 4053

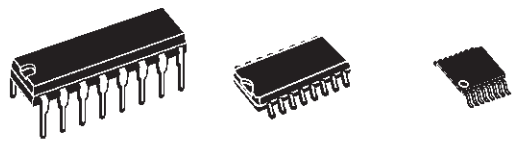

DIP SOP TSSOP

ORDER CODES

PACKAGE	TUBE	T & R
DIP	M74HCT4053B1R	
SOP	M74HCT4053M1R	M74HCT4053RM13TR
TSSOP		M74HCT4053TTR

DESCRIPTION

The M74HCT4053 is a triple two-channel analog MULTIPLEXER/DEMULTIPLEXER fabricated with silicon gate C^2MOS technology and it is pin to pin compatible with the equivalent metal gate CMOS4000B series.
It contains 6 bidirectional and digitally controlled analog switches.

A built-in level shifting is included to allow an input range up to ±6V (peak) for an analog signal with digital control signal of 0 to 6V.
V_{EE} supply pin is provided for analog input signals. It has an inhibit (INH) input terminal to disable all the switches when high, compatible with TTL output level. For operation as a digital multiplexer/demultiplexer, VEE is connected to GND. A, B and C control inputs select one of a pair of channels, they are compatible with TTL output level.
All inputs are equipped with protection circuits against static discharge and transient excess voltage.

PIN CONNECTION AND IEC LOGIC SYMBOLS

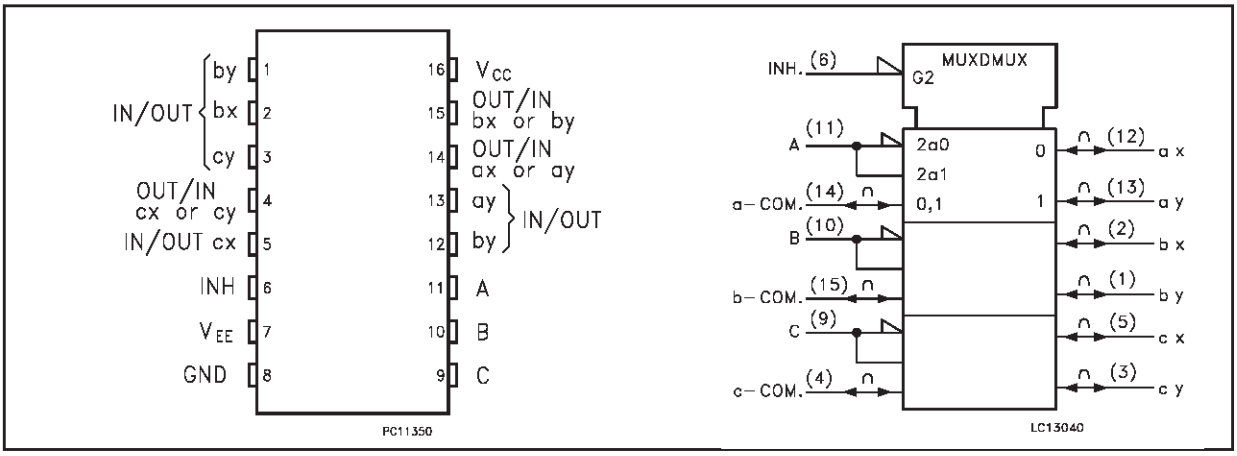

CONTROL INPUT EQUIVALENT CIRCUIT

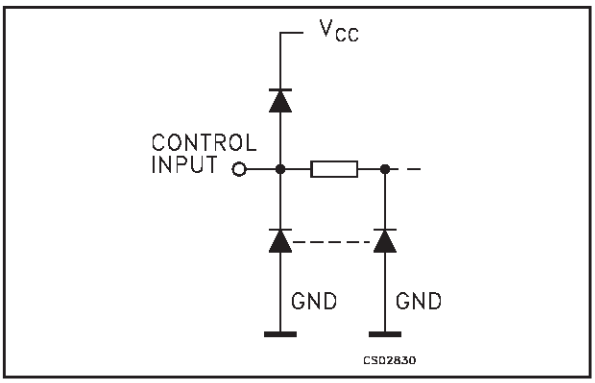

I/O EQUIVALENT CIRCUIT

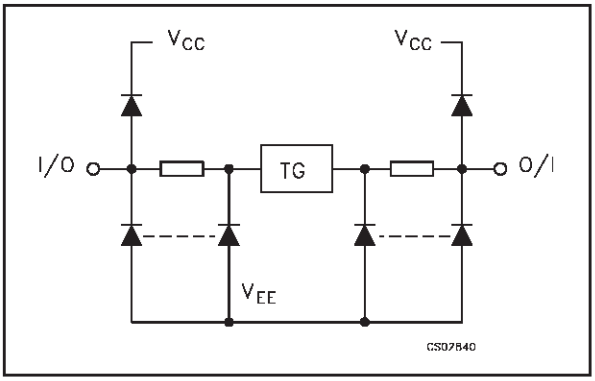

PIN DESCRIPTION

PIN No	SYMBOL	NAME AND FUNCTION
2, 1	bx, by	Independent Input Outputs
5, 3	cx, cy	Independent Input Outputs
6	INH	INHIBIT Input
7	V_{EE}	Negative Supply Voltage
11, 10, 9	A, B, C	Select Inputs
12, 13	ax, ay	Independent Input Outputs
14, 15, 4	ax to cy	Common Output/Input
8	GND	Ground (0V)
16	V_{CC}	Positive Supply Voltage

TRUTH TABLE

INPUT STATE		ON CHANNEL
INH	A or B or C	
L	L	ax or bx or cx
L	H	ay or by or cy
H	X	NONE

FUNCTIONAL DIAGRAM

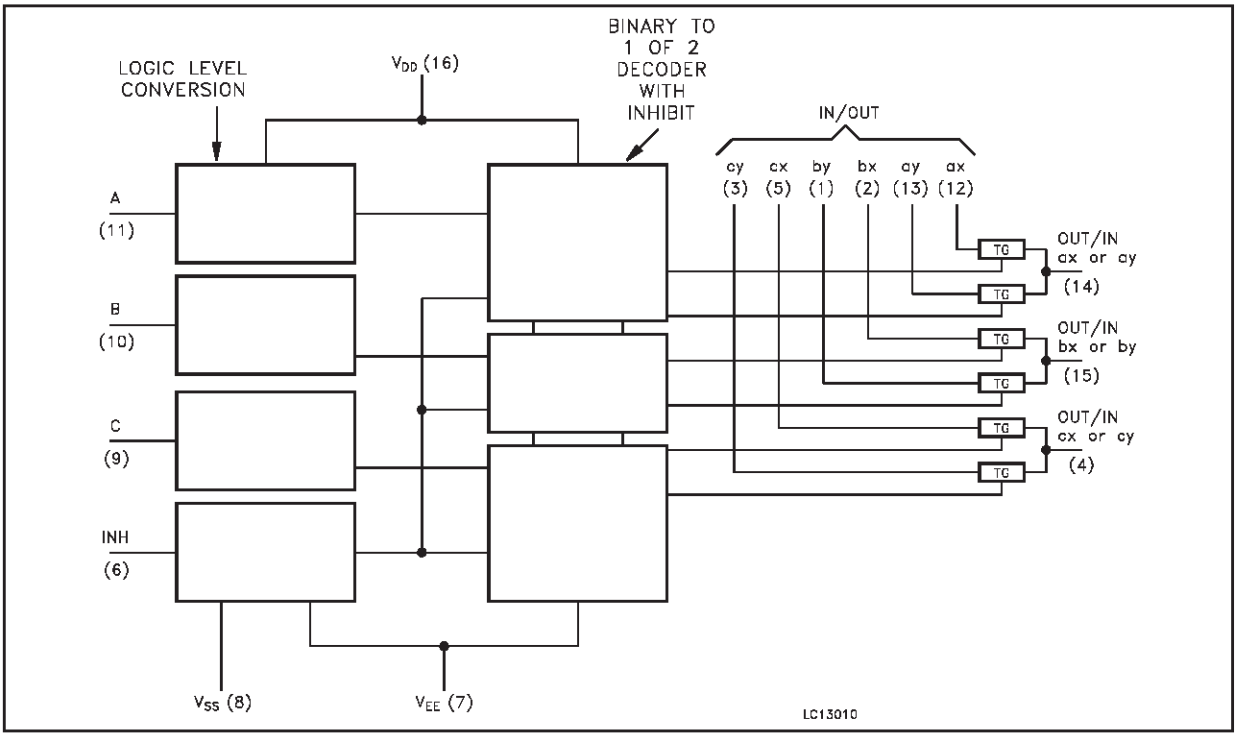

ABSOLUTE MAXIMUM RATINGS

Symbol	Parameter	Value	Unit
V_{CC}	Supply Voltage	-0.5 to +7	V
V_{CC} - V_{EE}	Supply Voltage	-0.5 to +13	V
V_I	Control Input Voltage	-0.5 to V_{CC} + 0.5	V
$V_{I/O}$	Switch I/O Voltage	V_{EE} -0.5 to V_{CC} + 0.5	V
I_{CK}	Control Input Diode Current	± 20	mA
I_{IOK}	I/O Diode Current	± 20	mA
I_T	Switch Through Current	± 25	mA
I_{CC} or I_{GND}	DC V_{CC} or Ground Current	± 50	mA
P_D	Power Dissipation	500(*)	mW
T_{stg}	Storage Temperature	-65 to +150	°C
T_L	Lead Temperature (10 sec)	300	°C

Absolute Maximum Ratings are those values beyond which damage to the device may occur. Functional operation under these conditions is not implied
(*) 500mW at 65 °C; derate to 300mW by 10mW/°C from 65°C to 85°C

RECOMMENDED OPERATING CONDITIONS

Symbol	Parameter		Value	Unit
V_{CC}	Supply Voltage		4.5 to 5.5	V
V_{EE}	Supply Voltage		-6 to 0	V
V_{CC} - V_{EE}	Supply Voltage		2 to 12	V
V_I	Input Voltage		0 to V_{CC}	V
$V_{I/O}$	I/O Voltage		V_{EE} to V_{CC}	V
T_{op}	Operating Temperature		-55 to 125	°C
t_r, t_f	Input Rise and Fall Time	V_{CC} = 4.5 to 5.5V	0 to 500	ns

DC SPECIFICATIONS

Symbol	Parameter	Test Condition			Value							Unit
		V_{CC} (V)	V_{EE} (V)		T_A = 25°C			-40 to 85°C		-55 to 125°C		
					Min.	Typ.	Max.	Min.	Max.	Min.	Max.	
V_{IHC}	High Level Input Voltage	4.5 to 5.5			2.0			2.0		2.0		V
V_{ILC}	Low Level Input Voltage	4.5 to 5.5					0.8		0.8		0.8	V
R_{ON}	ON Resistance	4.5	GND	$V_I = V_{IHC}$ or V_{ILC} $V_{I/O} = V_{CC}$ to V_{EE} $I_{I/O} \leq 2mA$		85	180		225		270	Ω
		4.5	-4.5			55	120		150		180	
		4.5	GND	$V_I = V_{IHC}$ or V_{ILC} $V_{I/O} = V_{CC}$ or V_{EE} $I_{I/O} \leq 2mA$		70	150		190		230	
		4.5	-4.5			50	100		125		150	
ΔR_{ON}	Difference of ON Resistance between switches	4.5	GND	$V_I = V_{IHC}$ or V_{ILC} $V_{I/O} = V_{CC}$ or V_{EE} $I_{I/O} \leq 2mA$		10	30		35		45	Ω
		4.5	-4.5			5	12		15		18	
I_{OFF}	Input/Output Leakage Current (SWITCH OFF)	5.5	GND	$V_{OS} = V_{CC}$ or GND V_{IS} = GND or V_{CC} $V_I = V_{ILC}$ or V_{IHC}			±0.06		± 0.6		± 1.0	µA
		5.5	-6.0				± 0.1		± 1		± 1	
I_{IZ}	Switch Input Leakage Current (SWITCH ON, OUTPUT OPEN)	5.5	GND	$V_{OS} = V_{CC}$ or GND $V_I = V_{IHC}$ or V_{ILC}			±0.06		± 0.6		± 1.0	µA
		5.5	-6.0				± 0.1		± 1		± 1	
I_I	Input Leakage Current	5.5	GND	$V_I = V_{CC}$ or GND			± 0.1		± 0.1		± 1	µA
I_{CC}	Quiescent Supply Current	5.5	GND	$V_I = V_{CC}$ or GND			4		40		80	µA
		5.5	-6.0				8		80		160	
ΔI_{CC}	Additional Quiescent Supply Current per input pin	4.5 to 5.5	GND	$V_I = V_{CC}$ - 2.1V other input at V_{CC} or GND		100	360		450		490	µA

AC ELECTRICAL CHARACTERISTICS (C_L = 50 pF, Input t_r = t_f = 6ns)

Symbol	Parameter	Test Condition			Value							Unit
		V_{CC} (V)	V_{EE} (V)		T_A = 25°C			-40 to 85°C		-55 to 125°C		
					Min.	Typ.	Max.	Min.	Max.	Min.	Max.	
$\Phi_{I/O}$	Phase Difference Between Input and Output	4.5	GND	C_L = 50pF		5	12		15		18	ns
		4.5	-4.5			4	8		10		12	
t_{PZL} t_{PZH}	Output Enable Time	4.5	GND	R_L = 1KΩ C_L = 50pF		13	45		56		68	ns
		4.5	-4.5			11	34		43		51	
t_{PLZ} t_{PHZ}	Output Disable Time	4.5	GND	R_L = 1KΩ C_L = 50pF		25	38		48		58	ns
		4.5	-4.5			19	31		39		47	

CAPACITANCE CHARACTERISTICS

Symbol	Parameter	Test Condition			Value							Unit
		V_{CC} (V)	V_{EE} (V)		T_A = 25°C			-40 to 85°C		-55 to 125°C		
					Min.	Typ.	Max.	Min.	Max.	Min.	Max.	
C_{IN}	Input Capacitance	5.0				5	10		10		10	pF
$C_{I/O}$	Common Terminal Capacitance	5.0	-5.0			11	20		20		20	pF
$C_{I/O}$	Switch Terminal Capacitance	5.0	-5.0			7	15		15		15	pF
C_{IOS}	Feed Through Capacitance	5.0	-5.0			0.75	2		2		2	pF
C_{PD}	Power Dissipation Capacitance (note 1)	5.0	GND			67						pF

1) C_{PD} is defined as the value of the IC's internal equivalent capacitance which is calculated from the operating current consumption without load. (Refer to Test Circuit). Average operating current can be obtained by the following equation. $I_{CC(opr)} = C_{PD} \times V_{CC} \times f_{IN} + I_{CC}$

ANALOG SWITCH CHARACTERISTICS (GND = 0V;T_A = 25°C)

Symbol	Parameter	Test Condition				Value	Unit
		V_{CC} (V)	V_{EE} (V)	V_{IN} (V_{p-p})		Typ.	
	Sine Wave Distortion	2.25	-2.25	4	f_{IN} = 1 KHz R_L = 10 KΩ, C_L = 50 pF	0.025	%
		4.5	-4.5	8		0.020	
	Sine Wave Distortion	2.25	-2.25	4	f_{IN} = 10 KHz R_L = 10 KΩ, C_L = 50 pF	0.12	%
		4.5	-4.5	8		0.06	
f_{MAX}	Frequency Response (Switch ON) (*)	2.25	-2.25		Adjust f_{IN} voltage to obtain 0 dBm at V_{OS}. Increase f_{IN} Frequency until dB meter reads -3dB R_L = 50Ω, C_L = 10 pF, f_{IN} = 1KHz sine wave	120	MHz
		4.5	-4.5			190	
f_{MAX}	Frequency Response (Switch ON) (**)	2.25	-2.25		Adjust f_{IN} voltage to obtain 0 dBm at V_{OS}. Increase f_{IN} Frequency until dB meter reads -3dB R_L = 50Ω, C_L = 10 pF, f_{IN} = 1KHz sine wave	95	MHz
		4.5	-4.5			150	
		6.0	-6.0				
	Feed through Attenuation (Switch OFF)	2.25	-2.25		V_{IN} is centered at (V_{CC} - V_{EE})/2 Adjust input for 0 dBm R_L = 600Ω, C_L = 50 pF, f_{IN} = 1MHz sine wave	-50	dB
		4.5	-4.5			-50	
	Crosstalk (Control Input to Signal Output)	4.5	0		Adjust R_L at set up so that I_S = 0A. R_L = 600Ω, C_L = 50 pF, f_{IN} = 1MHz square wave between Vcc and GND tr=tf= 6 ns	60	mV
		4.5	-4.5			140	
	Crosstalk (between any two switches)	2.25	-2.25		Adjust V_{IN} to obtain 0dBm at input R_L = 600Ω, C_L = 50 pF, f_{IN} = 1MHz sine wave	-50	dB
		4.5	-4.5			-50	

(*) Input COMMON Terminal, and measured at SWITCH Terminal
(**) Input SWITCH Terminal, and measured at common Terminal
NOTE: These characteristics are determined by the design of the device.

SWITCHING CARACTERISTICS TEST CIRCUIT

t_{PLZ}, t_{PHZ}, t_{PZL}, t_{PZH}

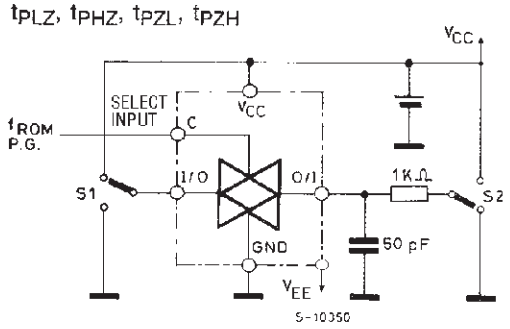

CROSSTALK (control to output)

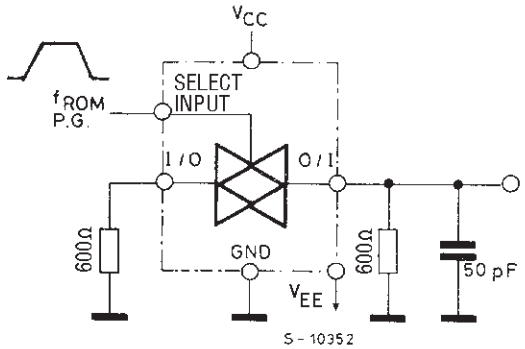

BANDWIDTH AND FEEDTHROUGH ATTENUATION

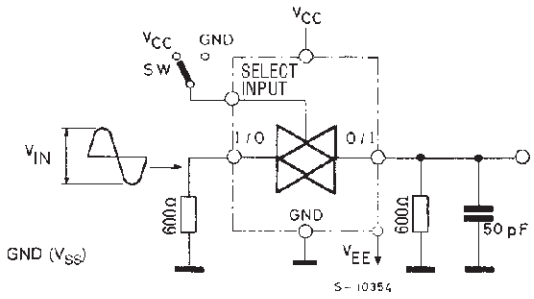

CROSSTALK BETWEEN ANY TWO SWITCHES

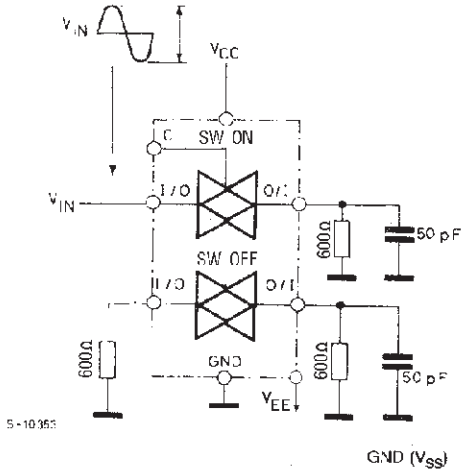

C_{I-O}, $C_{I/O}$

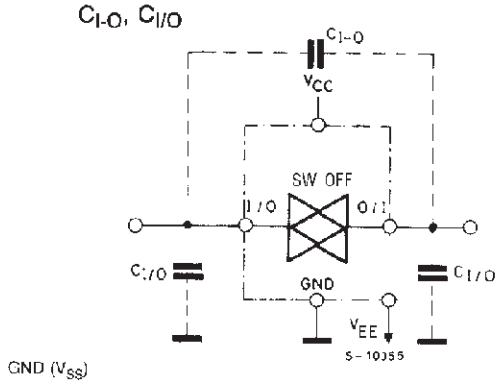

SWITCHING CHARACTERISTICS WAVEFORM

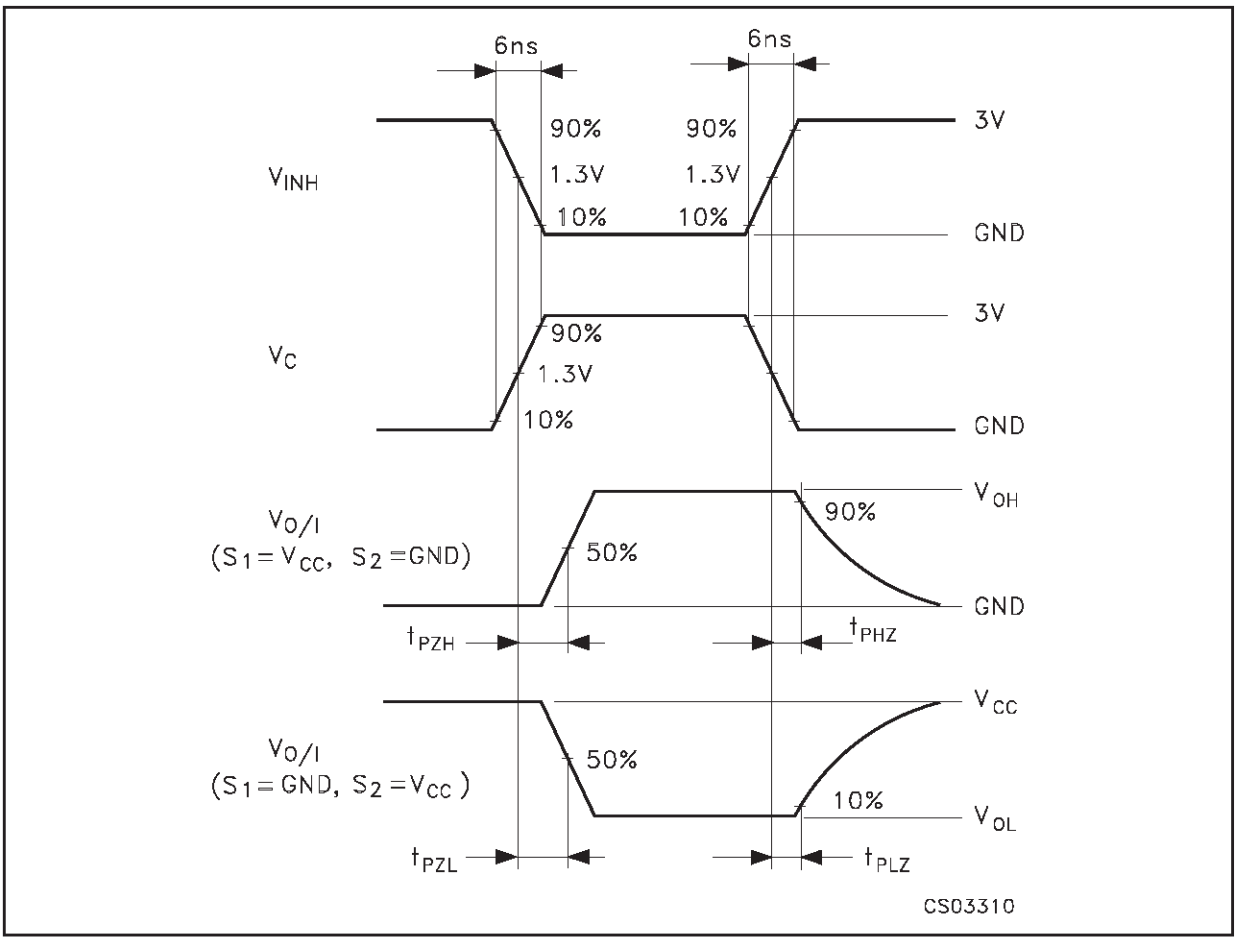

CHANNEL RESISTANCE (R_{ON})

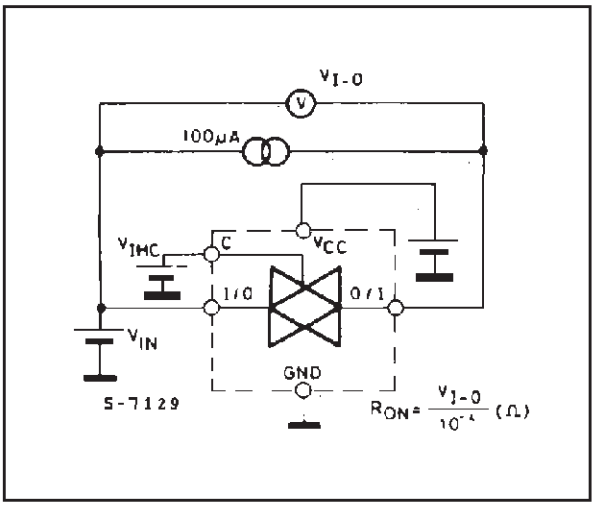

I_{CC} (Opr.)

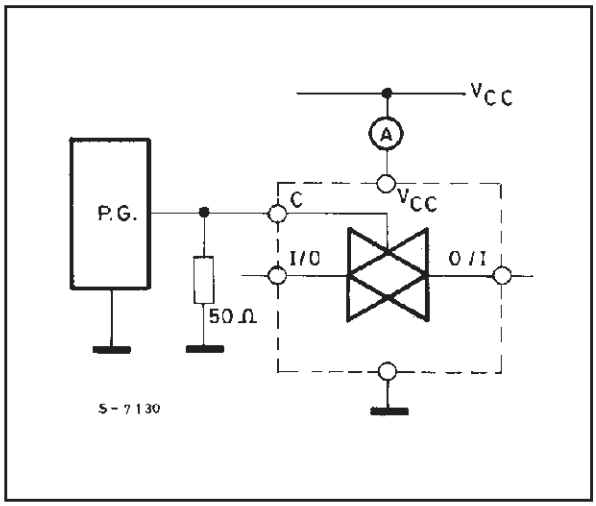

Plastic DIP-16 (0.25) MECHANICAL DATA

DIM.	mm.			inch		
	MIN.	TYP	MAX.	MIN.	TYP.	MAX.
a1	0.51			0.020		
B	0.77		1.65	0.030		0.065
b		0.5			0.020	
b1		0.25			0.010	
D			20			0.787
E		8.5			0.335	
e		2.54			0.100	
e3		17.78			0.700	
F			7.1			0.280
I			5.1			0.201
L		3.3			0.130	
Z			1.27			0.050

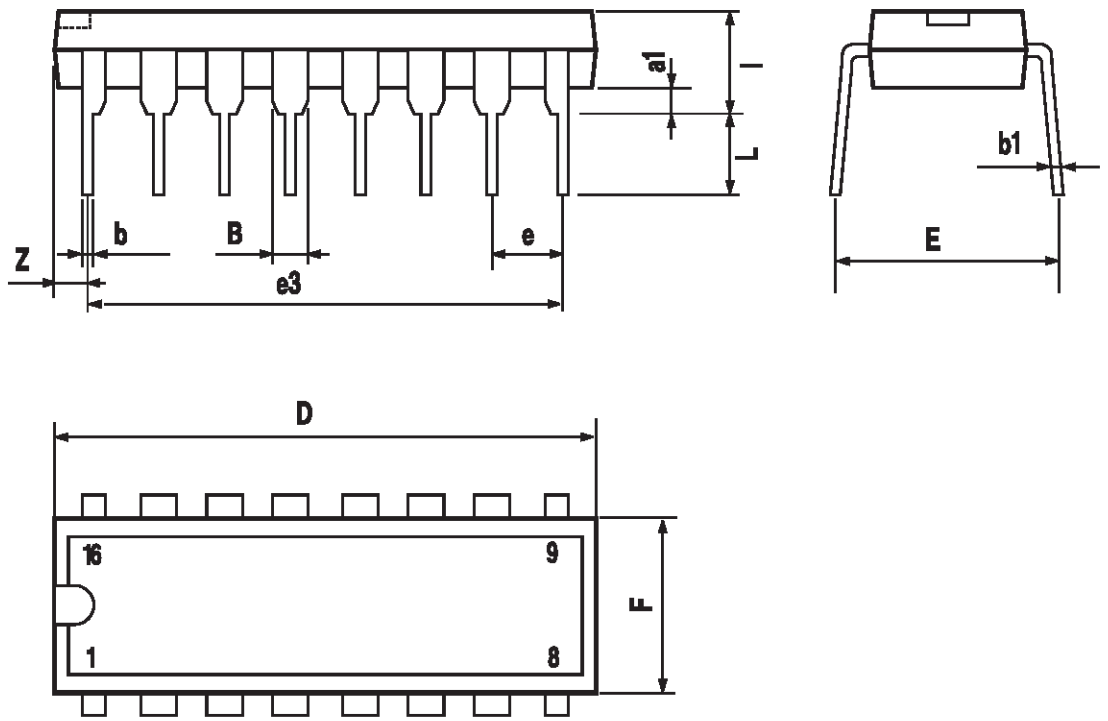

P001C

SO-16 MECHANICAL DATA

DIM.	mm.			inch		
	MIN.	TYP	MAX.	MIN.	TYP.	MAX.
A			1.75			0.068
a1	0.1		0.2	0.003		0.007
a2			1.65			0.064
b	0.35		0.46	0.013		0.018
b1	0.19		0.25	0.007		0.010
C		0.5			0.019	
c1	45° (typ.)					
D	9.8		10	0.385		0.393
E	5.8		6.2	0.228		0.244
e		1.27			0.050	
e3		8.89			0.350	
F	3.8		4.0	0.149		0.157
G	4.6		5.3	0.181		0.208
L	0.5		1.27	0.019		0.050
M			0.62			0.024
S	8° (max.)					

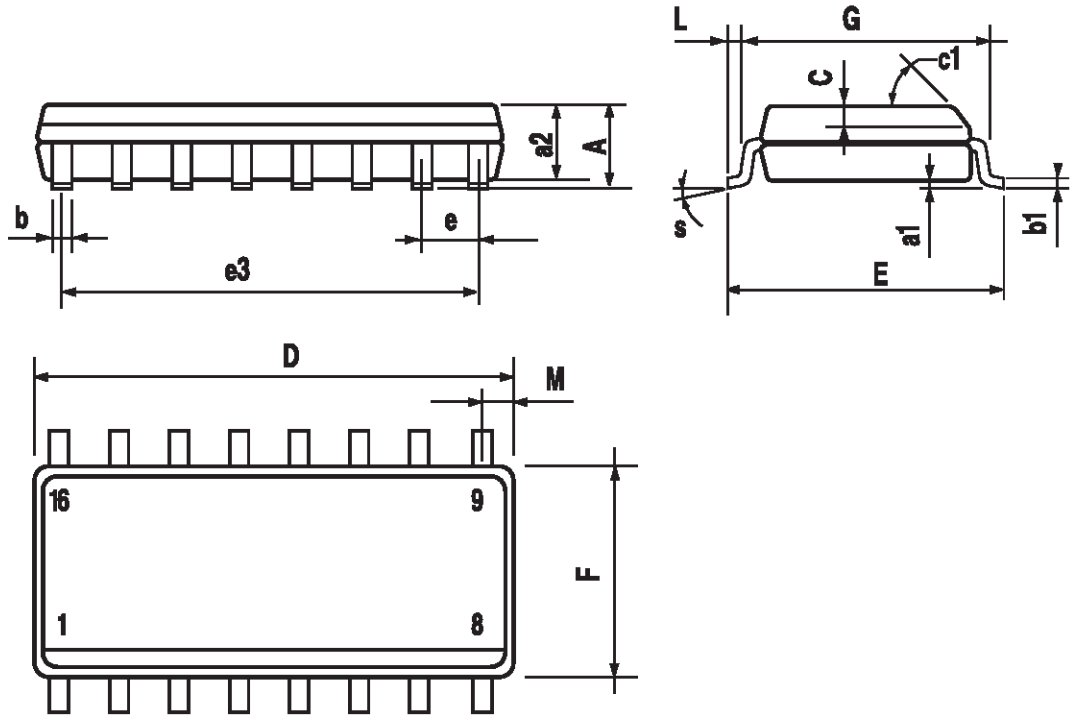

PO13H

TSSOP16 MECHANICAL DATA

DIM.	mm.			inch		
	MIN.	TYP	MAX.	MIN.	TYP.	MAX.
A			1.2			0.047
A1	0.05		0.15	0.002	0.004	0.006
A2	0.8	1	1.05	0.031	0.039	0.041
b	0.19		0.30	0.007		0.012
c	0.09		0.20	0.004		0.0089
D	4.9	5	5.1	0.193	0.197	0.201
E	6.2	6.4	6.6	0.244	0.252	0.260
E1	4.3	4.4	4.48	0.169	0.173	0.176
e		0.65 BSC			0.0256 BSC	
K	0°		8°	0°		8°
L	0.45	0.60	0.75	0.018	0.024	0.030

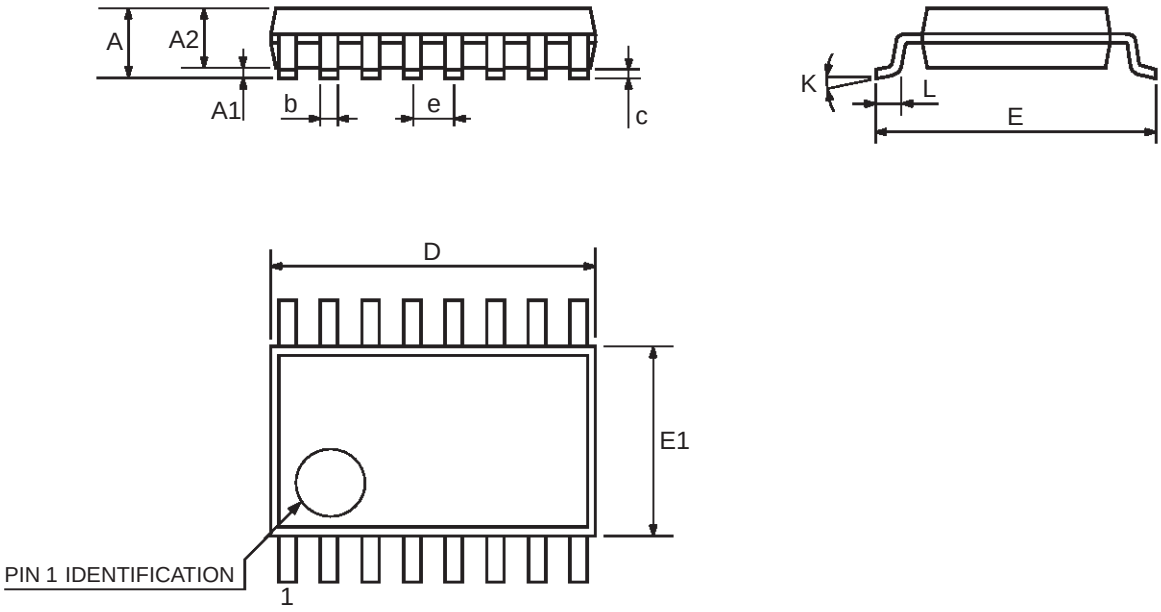

0080338D