M74HCT158

QUAD 2 CHANNEL MULTIPLEXER (INV.)

- HIGH SPEED:
  t_{PD} = 16ns (TYP.) at V_{CC} = 4.5V
- LOW POWER DISSIPATION:
  I_{CC} = 4µA(MAX.) at T_A=25°C
- COMPATIBLE WITH TTL OUTPUTS :
  V_{IH} = 2V (MIN.) V_{IL} = 0.8V (MAX)
- SYMMETRICAL OUTPUT IMPEDANCE:
  $|I_{OH}| = I_{OL}$ = 4mA (MIN)
- BALANCED PROPAGATION DELAYS:
  $t_{PLH} \cong t_{PHL}$
- PIN AND FUNCTION COMPATIBLE WITH 74 SERIES 158

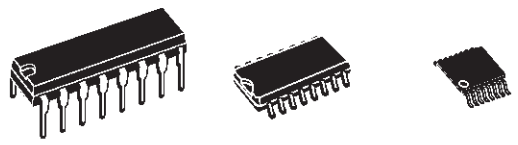

DIP SOP TSSOP

ORDER CODES

PACKAGE	TUBE	T & R
DIP	M74HCT158B1R	
SOP	M74HCT158M1R	M74HCT158RM13TR
TSSOP		M74HCT158TTR

DESCRIPTION

The M74HCT158 is an high speed CMOS QUAD 2 CHANNEL MULTIPLEXER fabricated with silicon gate C^2MOS technology.

This device consists of four 2-input digital multiplexer with common select and strobe inputs. The M74HCT158 is an inverting multiplexer.

When the $\overline{STROBE}$($\overline{ST}$) input is held high, selection of data is inhibited and all the outputs become high. The SELECT decoding determines whether the A or B inputs get routed to their corresponding Y outputs.

All inputs are equipped with protection circuits against static discharge and transient excess voltage.

PIN CONNECTION AND IEC LOGIC SYMBOLS

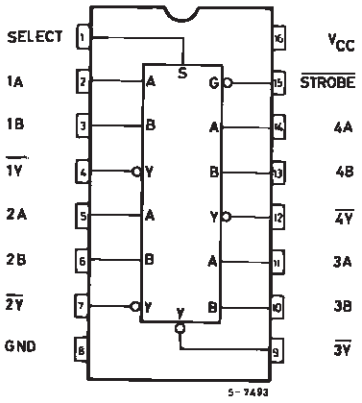

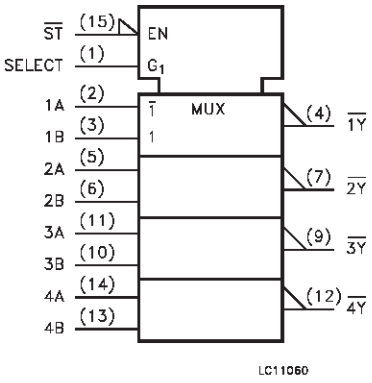

INPUT AND OUTPUT EQUIVALENT CIRCUIT

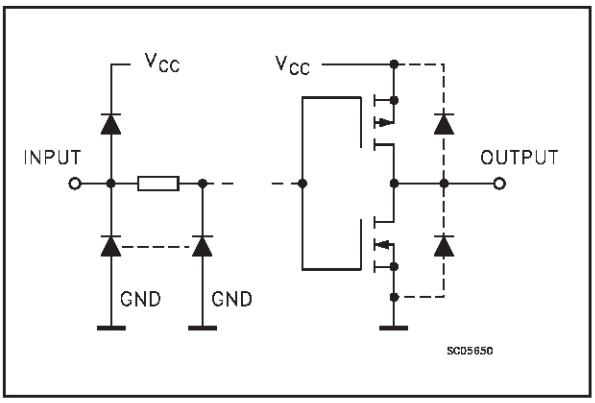

PIN DESCRIPTION

PIN No	SYMBOL	NAME AND FUNCTION
1	SELECT	Common Data Select Input
2, 5, 11, 14	1A to 4A	Data Inputs From Source A
3, 6, 10, 13	1B to 4B	Data Inputs From Source B
4, 7, 9, 12	$\overline{1Y}$ to $\overline{4Y}$	Multiplexer Output
15	$\overline{STROBE}$	Strobe Inputs
8	GND	Ground (0V)
16	V_{CC}	Positive Supply Voltage

TRUTH TABLE

INPUTS				OUTPUTS
$\overline{STROBE}$	SELECT	A	B	$\overline{Y}$
H	X	X	X	H
L	L	L	X	H
L	L	H	X	L
L	H	X	L	H
L	H	X	H	L

X : Don’t Care

LOGIC DIAGRAM

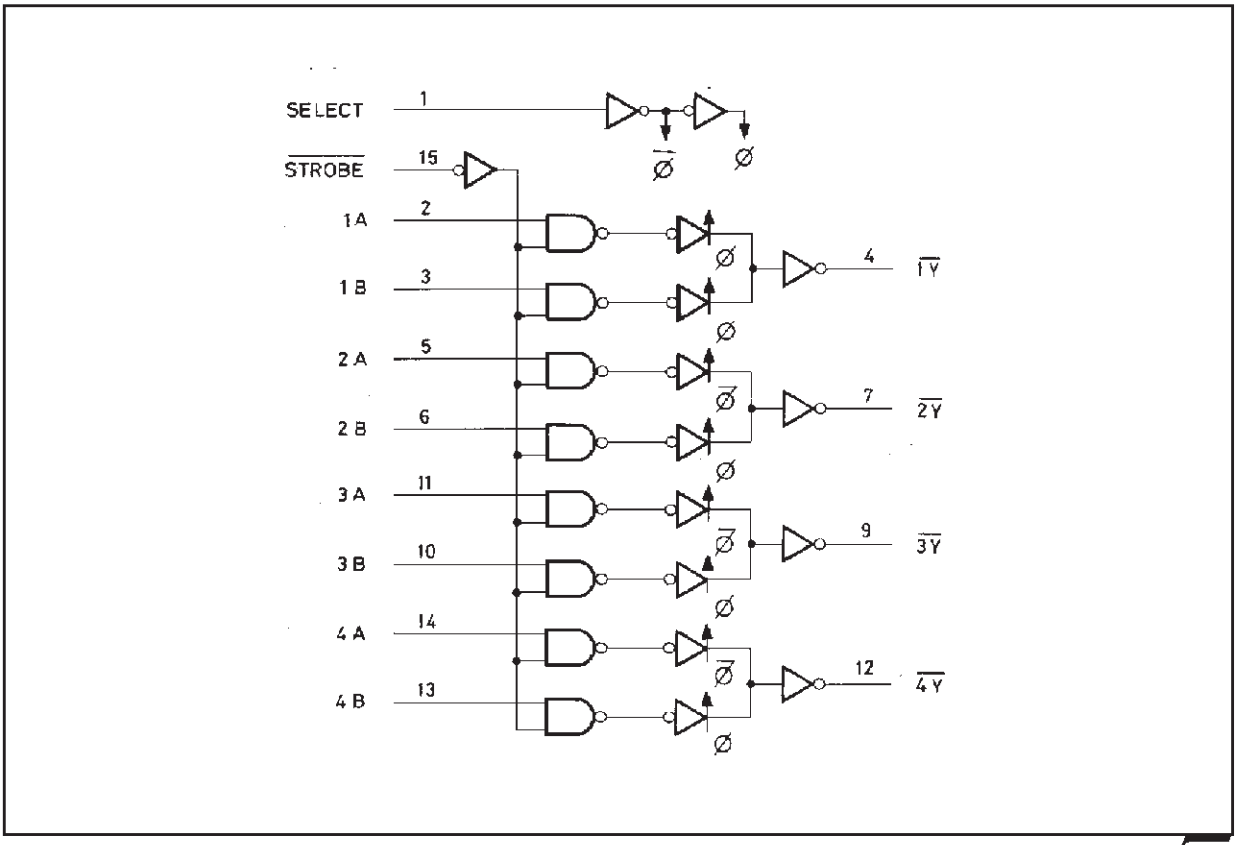

ABSOLUTE MAXIMUM RATINGS

Symbol	Parameter	Value	Unit
V_{CC}	Supply Voltage	-0.5 to +7	V
V_I	DC Input Voltage	-0.5 to V_{CC} + 0.5	V
V_O	DC Output Voltage	-0.5 to V_{CC} + 0.5	V
I_{IK}	DC Input Diode Current	± 20	mA
I_{OK}	DC Output Diode Current	± 20	mA
I_O	DC Output Current	± 25	mA
I_{CC} or I_{GND}	DC V_{CC} or Ground Current	± 50	mA
P_D	Power Dissipation	500(*)	mW
T_{stg}	Storage Temperature	-65 to +150	°C
T_L	Lead Temperature (10 sec)	300	°C

Absolute Maximum Ratings are those values beyond which damage to the device may occur. Functional operation under these conditions is not implied
(*) 500mW at 65 °C; derate to 300mW by 10mW/°C from 65°C to 85°C

RECOMMENDED OPERATING CONDITIONS

Symbol	Parameter	Value	Unit
V_{CC}	Supply Voltage	4.5 to 5.5	V
V_I	Input Voltage	0 to V_{CC}	V
V_O	Output Voltage	0 to V_{CC}	V
T_{op}	Operating Temperature	-55 to 125	°C
t_r, t_f	Input Rise and Fall Time (V_{CC} = 4.5 to 5.5V)	0 to 500	ns

DC SPECIFICATIONS

Symbol	Parameter	Test Condition		Value							Unit
		V_{CC} (V)		T_A = 25°C			-40 to 85°C		-55 to 125°C		
				Min.	Typ.	Max.	Min.	Max.	Min.	Max.	
V_{IH}	High Level Input Voltage	4.5 to 5.5		2.0			2.0		2.0		V
V_{IL}	Low Level Input Voltage	4.5 to 5.5				0.8		0.8		0.8	V
V_{OH}	High Level Output Voltage	4.5	I_O=-20 µA	4.4	4.5		4.4		4.4		V
			I_O=-4.0 mA	4.18	4.31		4.13		4.10		
V_{OL}	Low Level Output Voltage	4.5	I_O=20 µA		0.0	0.1		0.1		0.1	V
			I_O=4.0 mA		0.17	0.26		0.33		0.40	
I_I	Input Leakage Current	5.5	V_I = V_{CC} or GND			± 0.1		± 1		± 1	µA
I_{CC}	Quiescent Supply Current	5.5	V_I = V_{CC} or GND			4		40		80	µA
ΔI_{CC}	Additional Worst Case Supply Current	5.5	Per Input pin V_I = 0.5V or V_I = 2.4V Other Inputs at V_{CC} or GND I_O = 0			2.0		2.9		3.0	mA

* : Applicable only to DIR, G, $\overline{G}$ input

AC ELECTRICAL CHARACTERISTICS (C_L = 50 pF, Input t_r = t_f = 6ns)

Symbol	Parameter	Test Condition		Value							Unit
		V_{CC} (V)		T_A = 25°C			-40 to 85°C		-55 to 125°C		
				Min.	Typ.	Max.	Min.	Max.	Min.	Max.	
t_{TLH} t_{THL}	Output Transition Time	4.5			8	15		19		22	ns
t_{PLH} t_{PHL}	Propagation Delay Time (A, B - $\overline{Y}$)	4.5			16	25		31		38	ns
t_{PLH} t_{PHL}	Propagation Delay Time (SELECT - $\overline{Y}$)	4.5			19	30		38		45	ns
t_{PLH} t_{PHL}	Propagation Delay Time ($\overline{STROBE}$ -$\overline{Y}$)	4.5			17	27		34		41	ns

CAPACITIVE CHARACTERISTICS

Symbol	Parameter	Test Condition		Value							Unit
		V_{CC} (V)		T_A = 25°C			-40 to 85°C		-55 to 125°C		
				Min.	Typ.	Max.	Min.	Max.	Min.	Max.	
C_{IN}	Input Capacitance	5.0			5	10		10		10	pF
C_{PD}	Power Dissipation Capacitance (note 1)	5.0			60						pF

1) C_{PD} is defined as the value of the IC's internal equivalent capacitance which is calculated from the operating current consumption without load. (Refer to Test Circuit). Average operating current can be obtained by the following equation. $I_{CC(opr)} = C_{PD} \times V_{CC} \times f_{IN} + I_{CC}/4$(per channel)

TEST CIRCUIT

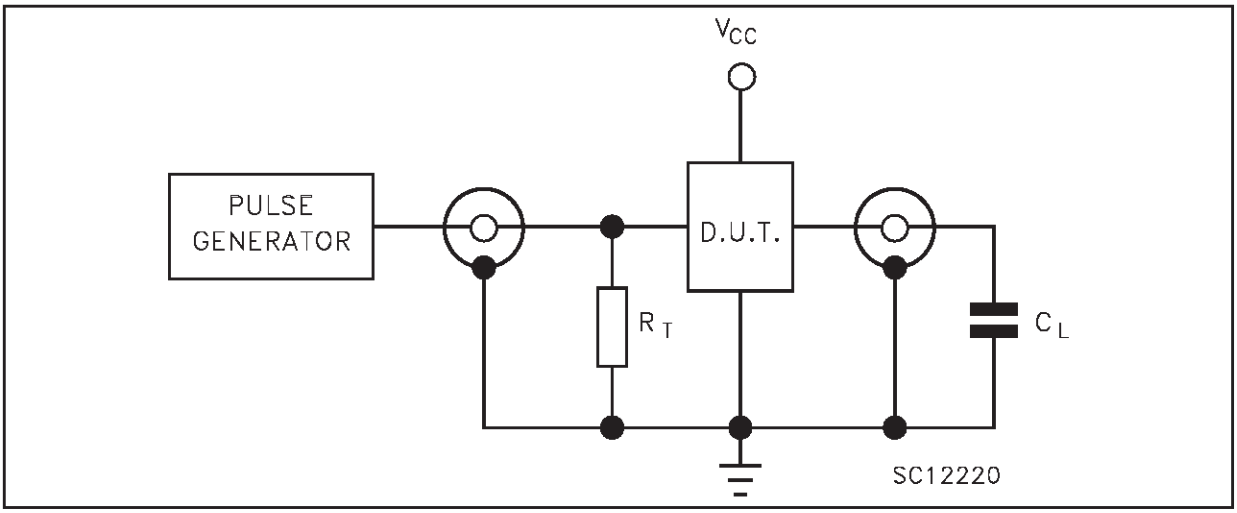

C_L = 50pF or equivalent (includes jig and probe capacitance)
$R_T = Z_{OUT}$ of pulse generator (typically 50Ω)

WAVEFORM : PROPAGATION DELAY TIMES (f=1MHz; 50% duty cycle)

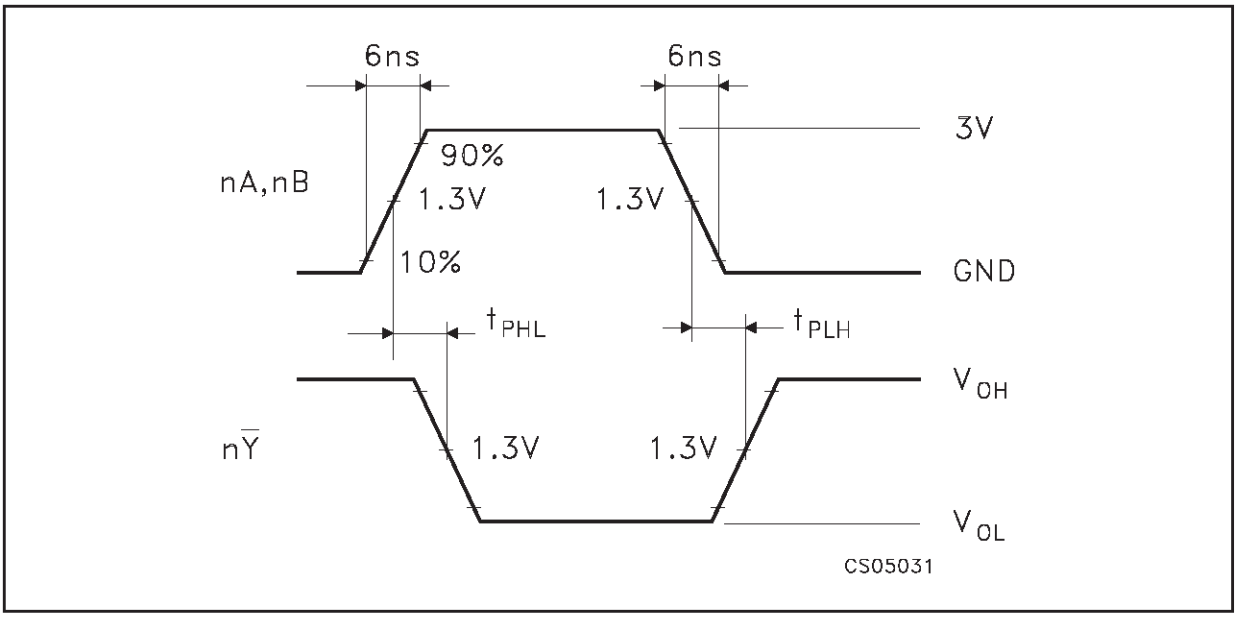

Plastic DIP-16 (0.25) MECHANICAL DATA

DIM.	mm.			inch		
	MIN.	TYP	MAX.	MIN.	TYP.	MAX.
a1	0.51			0.020		
B	0.77		1.65	0.030		0.065
b		0.5			0.020	
b1		0.25			0.010	
D			20			0.787
E		8.5			0.335	
e		2.54			0.100	
e3		17.78			0.700	
F			7.1			0.280
I			5.1			0.201
L		3.3			0.130	
Z			1.27			0.050

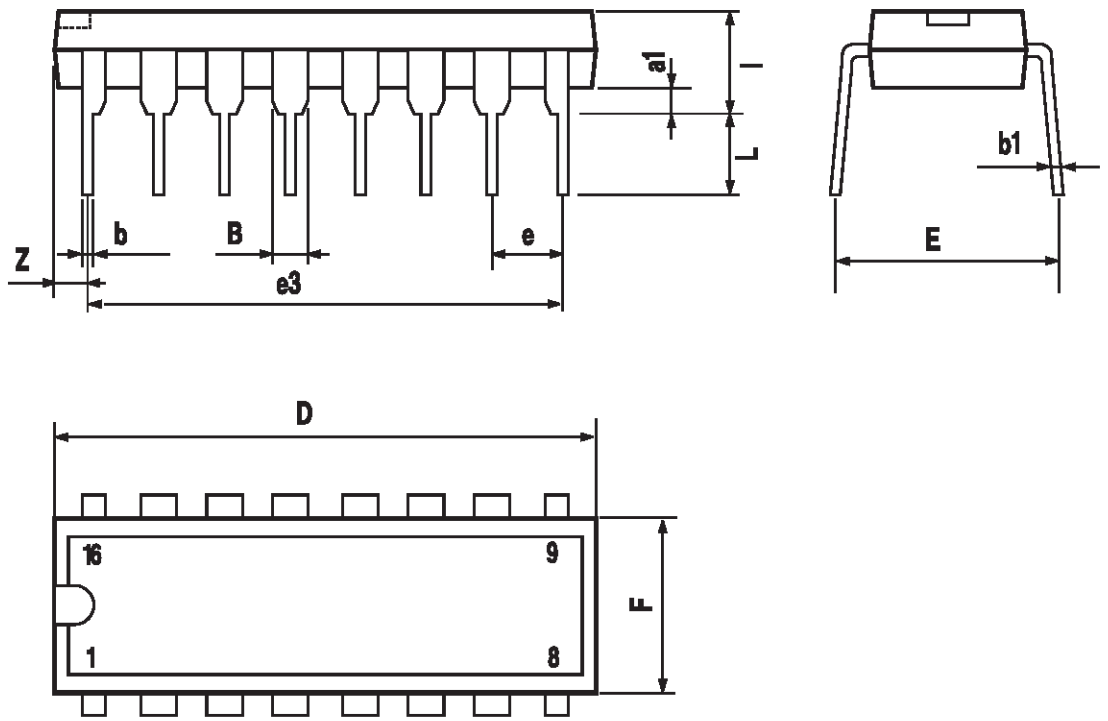

P001C

SO-16 MECHANICAL DATA

DIM.	mm.			inch		
	MIN.	TYP	MAX.	MIN.	TYP.	MAX.
A			1.75			0.068
a1	0.1		0.2	0.003		0.007
a2			1.65			0.064
b	0.35		0.46	0.013		0.018
b1	0.19		0.25	0.007		0.010
C		0.5			0.019	
c1	45° (typ.)					
D	9.8		10	0.385		0.393
E	5.8		6.2	0.228		0.244
e		1.27			0.050	
e3		8.89			0.350	
F	3.8		4.0	0.149		0.157
G	4.6		5.3	0.181		0.208
L	0.5		1.27	0.019		0.050
M			0.62			0.024
S	8° (max.)					

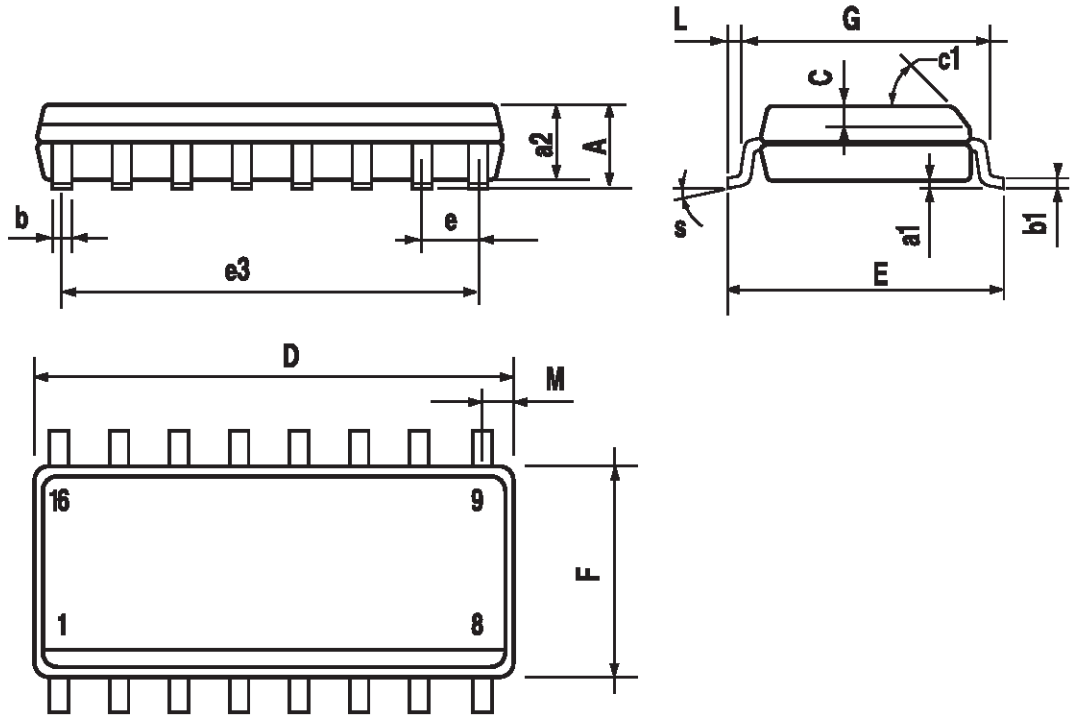

PO13H

TSSOP16 MECHANICAL DATA

DIM.	mm.			inch		
	MIN.	TYP	MAX.	MIN.	TYP.	MAX.
A			1.2			0.047
A1	0.05		0.15	0.002	0.004	0.006
A2	0.8	1	1.05	0.031	0.039	0.041
b	0.19		0.30	0.007		0.012
c	0.09		0.20	0.004		0.0089
D	4.9	5	5.1	0.193	0.197	0.201
E	6.2	6.4	6.6	0.244	0.252	0.260
E1	4.3	4.4	4.48	0.169	0.173	0.176
e		0.65 BSC			0.0256 BSC	
K	0°		8°	0°		8°
L	0.45	0.60	0.75	0.018	0.024	0.030

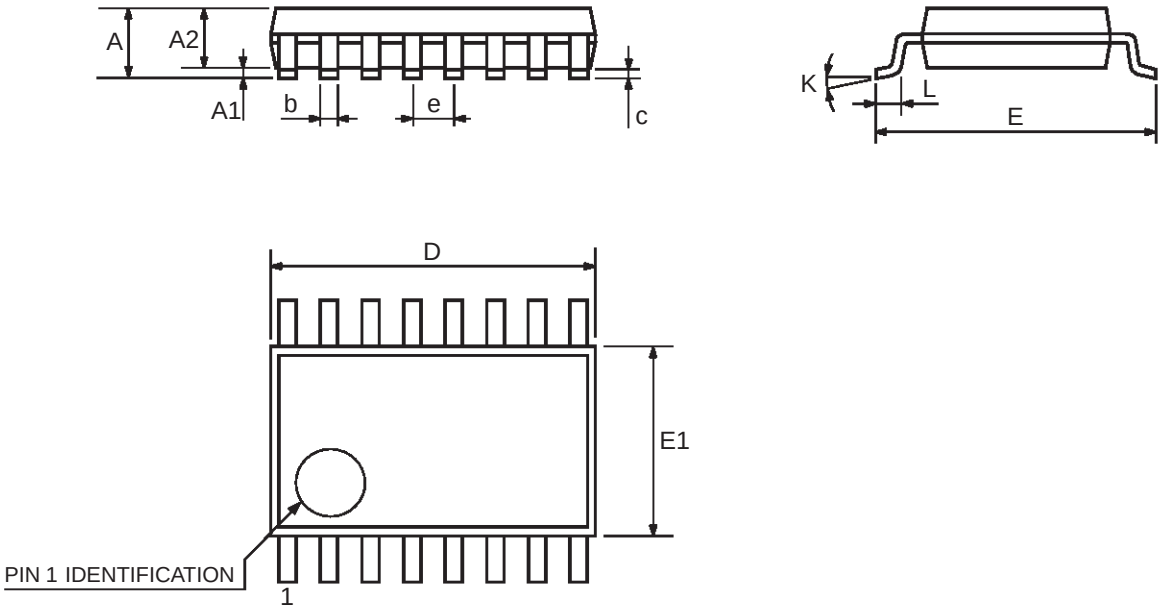

0080338D

Information furnished is believed to be accurate and reliable. However, STMicroelectronics assumes no responsibility for the consequences of use of such information nor for any infringement of patents or other rights of third parties which may result from its use. No license is granted by implication or otherwise under any patent or patent rights of STMicroelectronics. Specifications mentioned in this publication are subject to change without notice. This publication supersedes and replaces all information previously supplied. STMicroelectronics products are not authorized for use as critical components in life support devices or systems without express written approval of STMicroelectronics.

© The ST logo is a registered trademark of STMicroelectronics

© 2001 STMicroelectronics - Printed in Italy - All Rights Reserved
STMicroelectronics GROUP OF COMPANIES
Australia - Brazil - China - Finland - France - Germany - Hong Kong - India - Italy - Japan - Malaysia - Malta - Morocco
Singapore - Spain - Sweden - Switzerland - United Kingdom
© **http://www.st.com**