STP2NC70Z, STP2NC70ZFP
STD1NC70Z, STD1NC70Z-1

N-CHANNEL 700V - 7.3Ω - 1.4A TO-220/FP/DPAK/IPAK
Zener-Protected PowerMESH™ III MOSFET

TYPE	V_{DSS}	$R_{DS(on)}$	I_D	Pw
STP2NC70Z	700 V	< 8.5 Ω	1.4 A	50 W
STP2NC70ZFP	700 V	< 8.5 Ω	1.4 A	25 W
STD1NC70Z	700 V	< 8.5 Ω	1.4 A	45 W
STD1NC70Z-1	700 V	< 8.5 Ω	1.4 A	45 W

- TYPICAL R_{DS}(on) = 7.3 Ω
- EXTREMELY HIGH dv/dt CAPABILITY
- 100% AVALANCHE TESTED
- GATE CHARGE MINIMIZED
- VERY LOW INTRINSIC CAPACITANCES

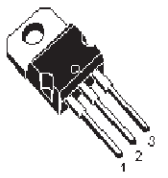

TO-220

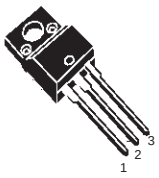

TO-220FP

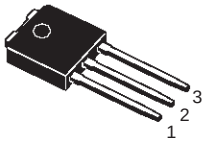

IPAK

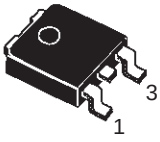

DPAK

DESCRIPTION

The third generation of MESH OVERLAY™ Power MOSFETs for very high voltage exhibits unsurpassed on-resistance per unit area while integrating back-to-back Zener diodes between gate and source. Such arrangement gives extra ESD capability with higher ruggedness performance as requested by a large variety of single-switch applications..

APPLICATIONS

- SINGLE-ENDED SMPS IN MONITORS, COMPUTER AND INDUSTRIAL APPLICATION
- WELDING EQUIPMENT

INTERNAL SCHEMATIC DIAGRAM

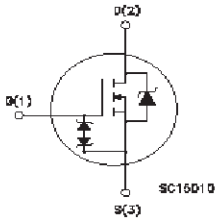

ORDERING INFORMATION

SALES TYPE	MARKING	PACKAGE	PACKAGING
STP2NC70Z	P2NC70Z	TO-220	TUBE
STP2NC70ZFP	P2NC70ZFP	TO-220FP	TUBE
STD1NC70ZT4	D1NC70Z	DPAK	TAPE & REEL
STD1NC70Z-1	D1NC70Z	IPAK	TUBE

ABSOLUTE MAXIMUM RATINGS

Symbol	Parameter	Value			Unit
		STP2NC70Z	STP2NC70ZFP	STD1NC70Z STD1NC70Z-1	
V_{DS}	Drain-source Voltage (V_{GS} = 0)	700			V
V_{DGR}	Drain-gate Voltage (R_{GS} = 20 kΩ)	700			V
V_{GS}	Gate- source Voltage	± 25			V
I_D	Drain Current (continuos) at T_C = 25°C	1.4	1.4 (*)	1.4	A
I_D	Drain Current (continuos) at T_C = 100°C	0.9	0.9 (*)	0.9	A
I_{DM} (l)	Drain Current (pulsed)	5.6	5.6 (*)	5.6	A
P_{TOT}	Total Dissipation at T_C = 25°C	50	25	45	W
	Derating Factor	0.4	0.2	0.36	W/°C
I_{GS}	Gate-source Current (DC)	± 50			mA
$V_{ESD(G-S)}$	Gate source ESD(HBM-C=100pF, R=1.5KΩ)	2000			V
dv/dt (1)	Peak Diode Recovery voltage slope	3			V/ns
V_{ISO}	Insulation Withstand Voltage (DC)	-	2500	-	V
T_j T_{stg}	Operating Junction Temperature Storage Temperature	-65 to 150 -65 to 150			°C °C

(l) Pulse width limited by safe operating area
(1) I_{SD} ≤10A, di/dt ≤200A/µs, $V_{DD} \leq V_{(BR)DSS}$, $T_j \leq T_{JMAX.}$
(*) Limited only by maximum temperature allowed

THERMAL DATA

		TO-220	TO-220FP	DPAK IPAK	
Rthj-case	Thermal Resistance Junction-case Max	2.5	5	2.75	°C/W
Rthj-pcb	Thermal Resistance Junction-pcb Max (for SMD) (#)			100	°C/W
Rthj-amb	Thermal Resistance Junction-ambient Max	62.5		100	°C/W
T_l	Maximum Lead Temperature For Soldering Purpose	300		275	°C

AVALANCHE CHARACTERISTICS

Symbol	Parameter	Max Value	Unit
I_{AR}	Avalanche Current, Repetitive or Not-Repetitive (pulse width limited by T_j max)	1.4	A
E_{AS}	Single Pulse Avalanche Energy (starting T_j = 25 °C, I_D = I_{AR}, V_{DD} = 50 V)	60	mJ

GATE-SOURCE ZENER DIODE

Symbol	Parameter	Test Conditions	Min.	Typ.	Max.	Unit
BV_{GSO}	Gate-Source Breakdown Voltage	Igs=± 1mA (Open Drain)	25			V
αT	Voltage Thermal Coefficient	T=25°C Note(3)		1.3		10^{-4}/°C

Note: 3. $\Delta V_{BV} = \alpha T\ (25°\text{-}T)\ BV_{GSO}(25°)$
(#) When mounted on minimum Footprint

PROTECTION FEATURES OF GATE-TO-SOURCE ZENER DIODES

The built-in back-to-back Zener diodes have specifically been designed to enhance not only the device's ESD capability, but also to make them safely absorb possible voltage transients that may occasionally be applied from gate to souce. In this respect the Zener voltage is appropriate to achieve an efficient and cost-effective intervention to protect the device's integrity. These integrated Zener diodes thus avoid the usage of external components.

ELECTRICAL CHARACTERISTICS (TCASE =25°C UNLESS OTHERWISE SPECIFIED)

ON/OFF

Symbol	Parameter	Test Conditions	Min.	Typ.	Max.	Unit
$V_{(BR)DSS}$	Drain-source Breakdown Voltage	I_D = 250 µA, V_{GS} = 0	700			V
I_{DSS}	Zero Gate Voltage Drain Current (V_{GS} = 0)	V_{DS} = Max Rating V_{DS} = Max Rating, T_C = 125 °C			1 50	µA µA
I_{GSS}	Gate-body Leakage Current (V_{DS} = 0)	V_{GS} = ± 20V			±10	µA
$V_{GS(th)}$	Gate Threshold Voltage	V_{DS} = V_{GS}, I_D = 250µA	3	4	5	V
$R_{DS(on)}$	Static Drain-source On Resistance	V_{GS} = 10V, I_D = 0.7 A		7.3	8.5	Ω

DYNAMIC

Symbol	Parameter	Test Conditions	Min.	Typ.	Max.	Unit
g_{fs} (1)	Forward Transconductance	V_{DS} = 15 V, I_D = 0.7 A		1.2		S
C_{iss} C_{oss} C_{rss}	Input Capacitance Output Capacitance Reverse Transfer Capacitance	V_{DS} = 25V, f = 1 MHz, V_{GS} = 0		305 34 3.6		pF pF pF
$C_{oss\ eq.}$ (3)	Equivalent Output Capacitance	V_{GS} = 0V, V_{DS} = 0V to 560V		28		pF

SWITCHING ON

Symbol	Parameter	Test Conditions	Min.	Typ.	Max.	Unit
$t_{d(on)}$ t_r	Turn-on Delay Time Rise Time	V_{DD} = 350 V, I_D = 0.8 A R_G = 4.7Ω V_{GS} = 10 V (Resistive Load see, Figure 3)		11 8		ns ns
Q_g Q_{gs} Q_{gd}	Total Gate Charge Gate-Source Charge Gate-Drain Charge	V_{DD} = 560V, I_D = 1.6 A, V_{GS} = 10V		8 2 3.8	12	nC nC nC

SWITCHING OFF

Symbol	Parameter	Test Conditions	Min.	Typ.	Max.	Unit
$t_{d(off)}$ t_f	Turn-off Delay Time Fall Time	V_{DD} = 350 V, I_D = 0.8 A R_G = 4.7Ω V_{GS} = 10 V (Resistive Load see, Figure 3)		27 30		ns ns
$t_{r(Voff)}$ t_f t_c	Off-voltage Rise Time Fall Time Cross-over Time	V_{DD} = 560V, I_D = 1.6 A, R_G = 4.7Ω, V_{GS} = 10V (Inductive Load see, Figure 5)		20 5 25		ns ns ns

SOURCE DRAIN DIODE

Symbol	Parameter	Test Conditions	Min.	Typ.	Max.	Unit
I_{SD} I_{SDM} (2)	Source-drain Current Source-drain Current (pulsed)				1.4 5.6	A A
V_{SD} (1)	Forward On Voltage	I_{SD} = 1.4 A, V_{GS} = 0			1.6	V
t_{rr} Q_{rr} I_{RRM}	Reverse Recovery Time Reverse Recovery Charge Reverse Recovery Current	I_{SD} = 1.6 A, di/dt = 100A/µs V_{DD} = 30V, T_j = 150°C (see test circuit, Figure 5)		370 1.3 6.8		ns µC A

Note: 1. Pulsed: Pulse duration = 300 µs, duty cycle 1.5 %.
2. Pulse width limited by safe operating area.
3. $C_{oss\ eq.}$ is defined as a constant equivalent capacitance giving the same charging time as C_{oss} when V_{DS} increases from 0 to 80% V_{DSS}.

Safe Operating Area For TO-220

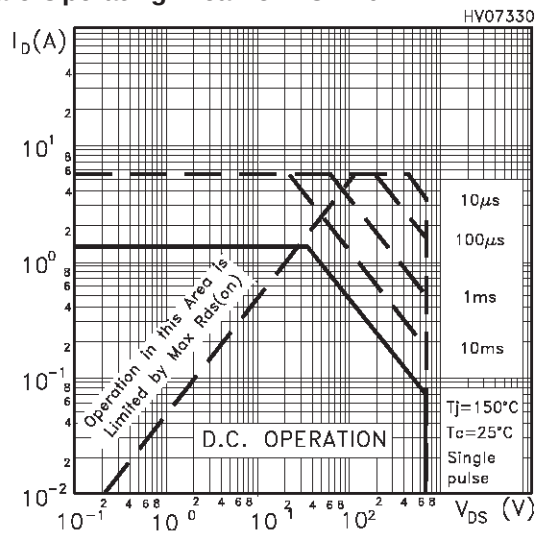

Thermal Impedance For TO-220

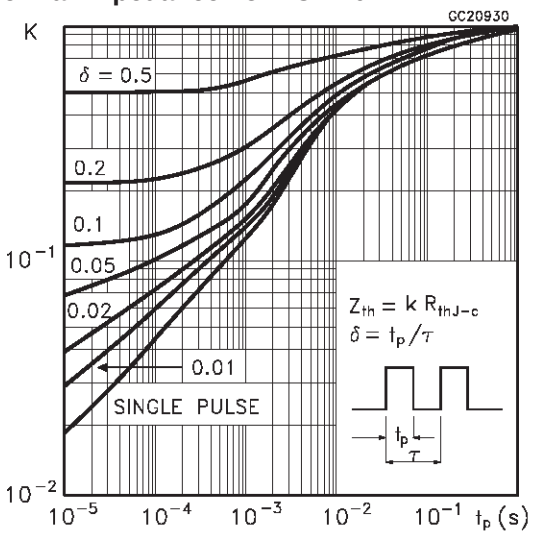

Safe Operating Area For TO-220FP

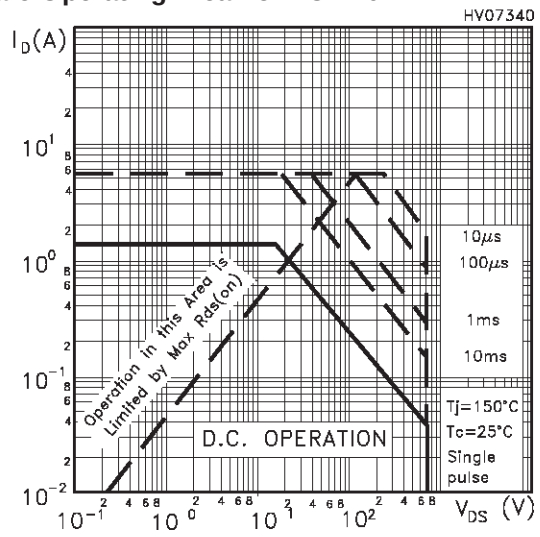

Thermal Impedance For TO-220FP

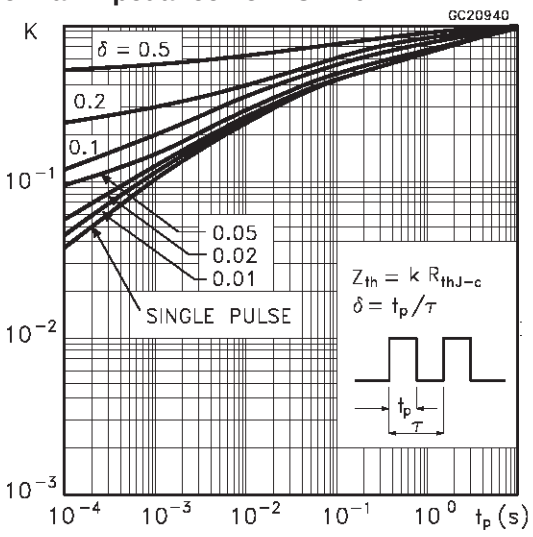

Safe Operating Area For DPAK/IPAK

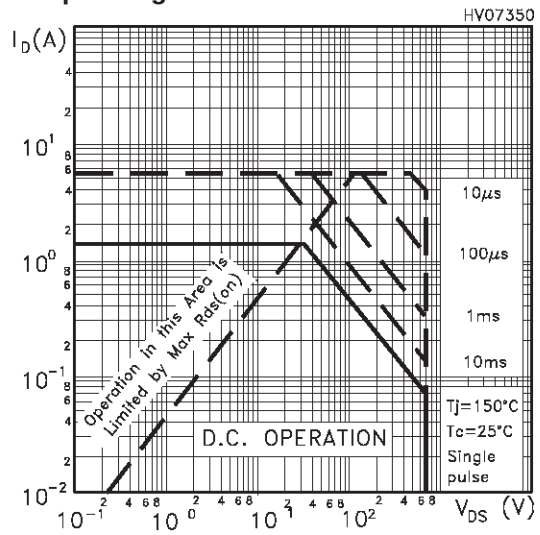

Thermal Impedance For DPAK/IPAK

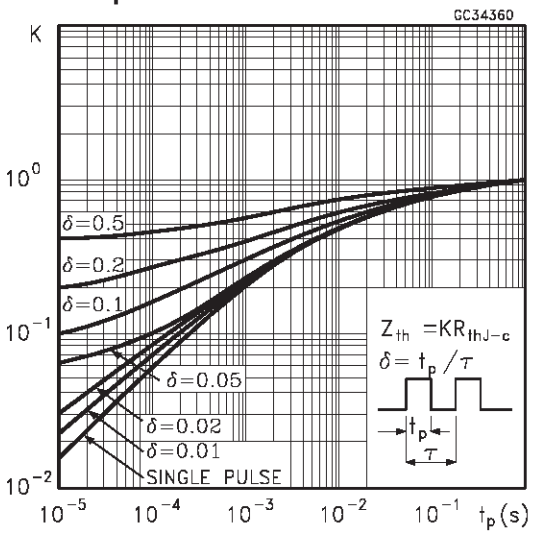

Output Characteristics

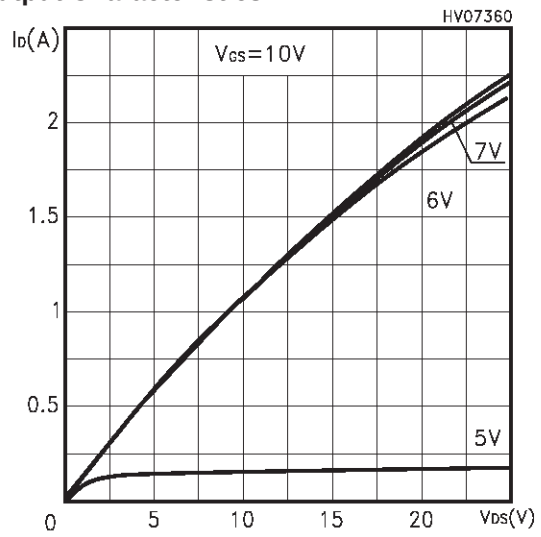

Transfer Characteristics

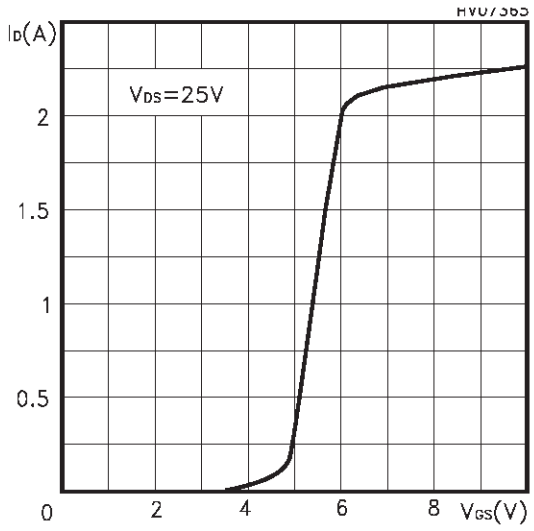

Transconductance

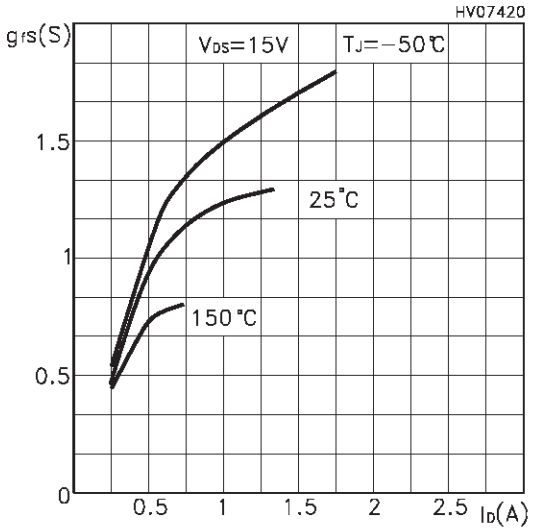

Static Drain-source On Resistance

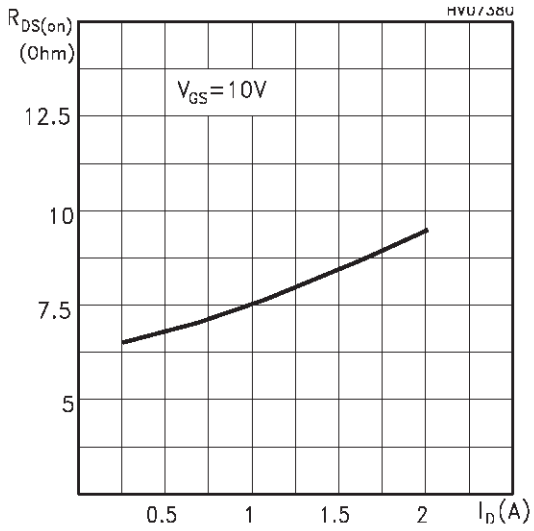

Gate Charge vs Gate-source Voltage

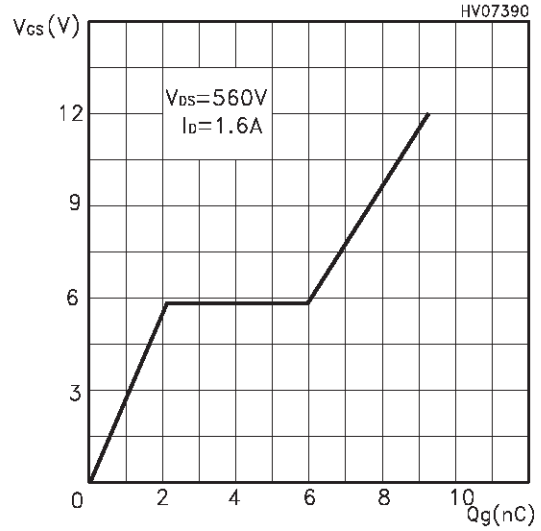

Capacitance Variations

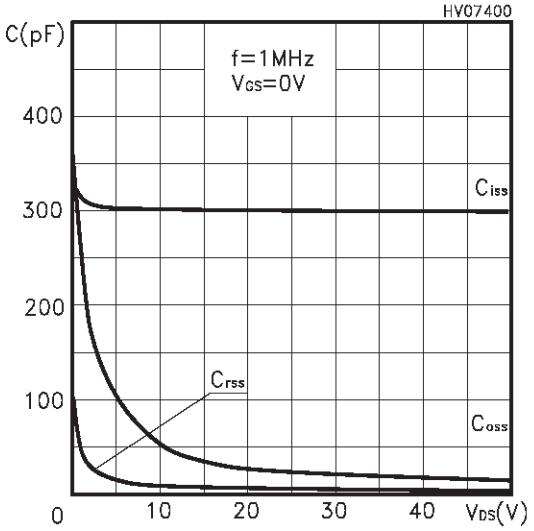

Normalized Gate Threshold Voltage vs Temp.

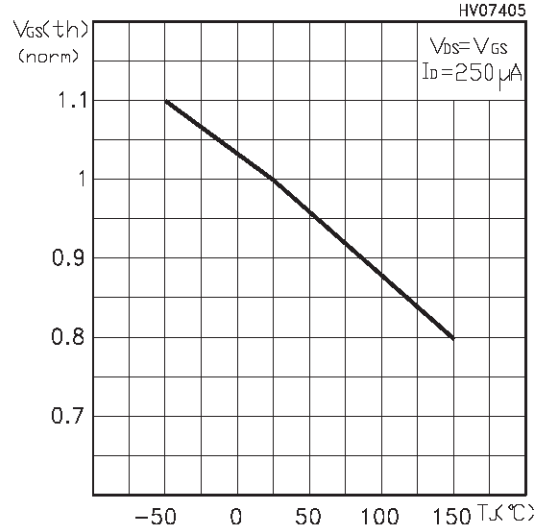

Normalized On Resistance vs Temperature

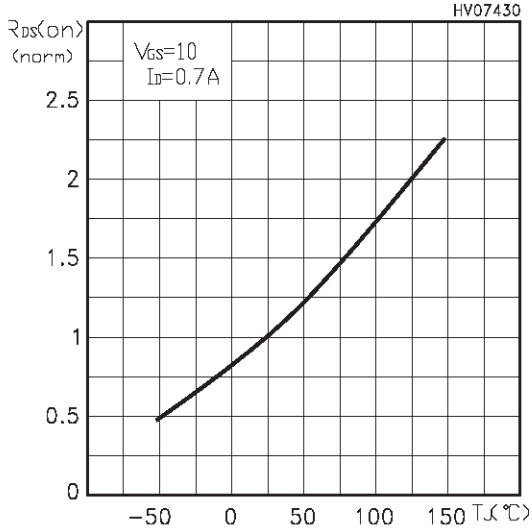

Source-drain Diode Forward Characteristics

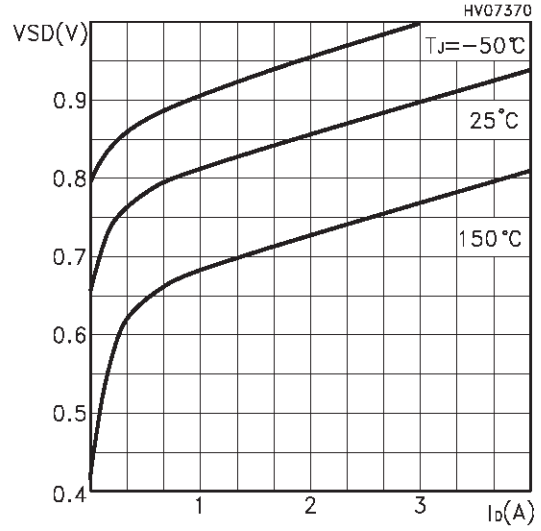

Normalized BVDSS vs Temperature

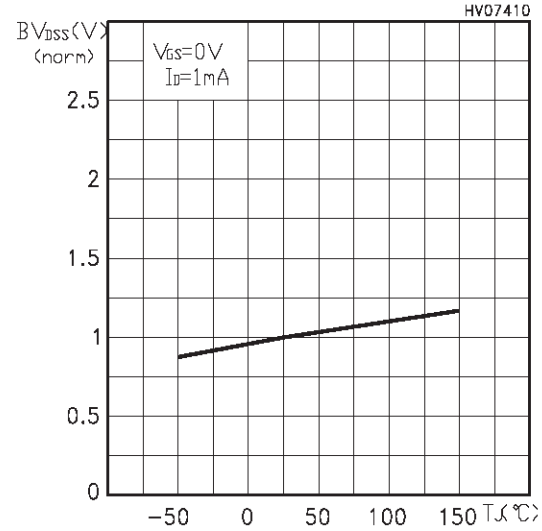

Fig. 1: Unclamped Inductive Load Test Circuit

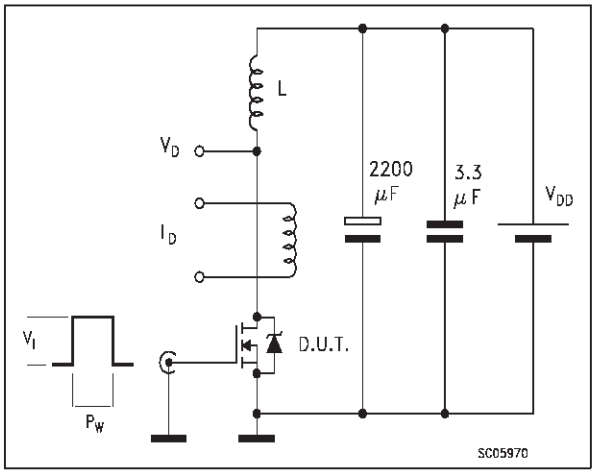

Fig. 2: Unclamped Inductive Waveform

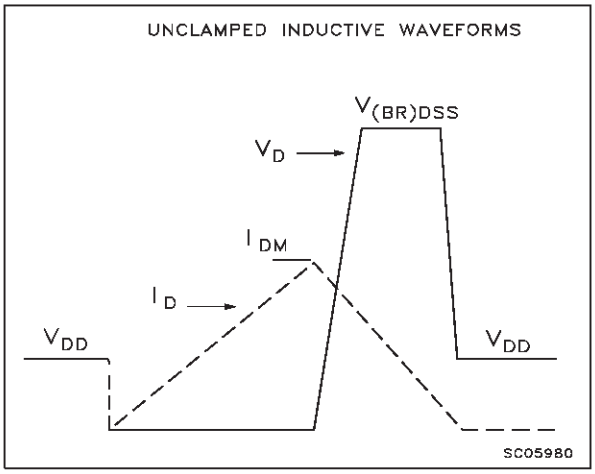

Fig. 3: Switching Times Test Circuit For Resistive Load

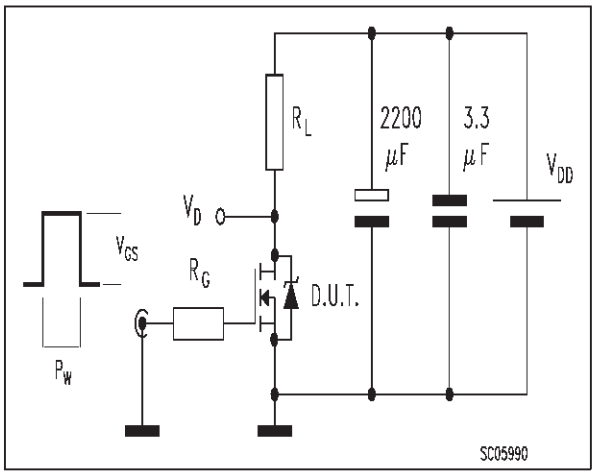

Fig. 4: Gate Charge test Circuit

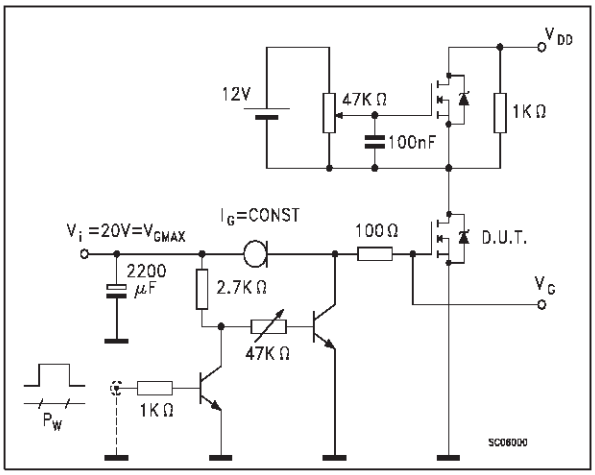

Fig. 5: Test Circuit For Inductive Load Switching And Diode Recovery Times

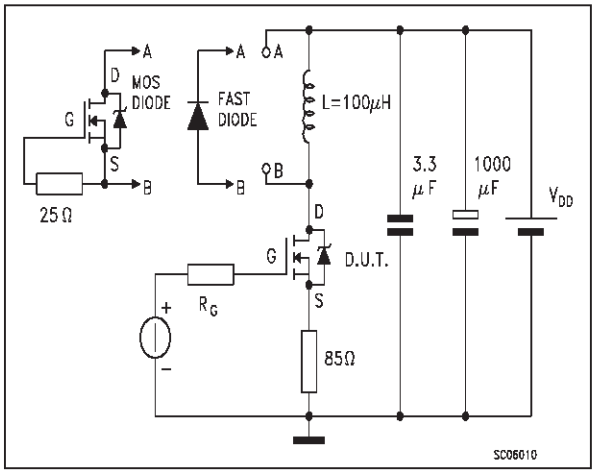

TO-220 MECHANICAL DATA

DIM.	mm			inch		
	MIN.	TYP.	MAX.	MIN.	TYP.	MAX.
A	4.40		4.60	0.173		0.181
C	1.23		1.32	0.048		0.051
D	2.40		2.72	0.094		0.107
D1		1.27			0.050	
E	0.49		0.70	0.019		0.027
F	0.61		0.88	0.024		0.034
F1	1.14		1.70	0.044		0.067
F2	1.14		1.70	0.044		0.067
G	4.95		5.15	0.194		0.203
G1	2.4		2.7	0.094		0.106
H2	10.0		10.40	0.393		0.409
L2		16.4			0.645	
L4	13.0		14.0	0.511		0.551
L5	2.65		2.95	0.104		0.116
L6	15.25		15.75	0.600		0.620
L7	6.2		6.6	0.244		0.260
L9	3.5		3.93	0.137		0.154
DIA.	3.75		3.85	0.147		0.151

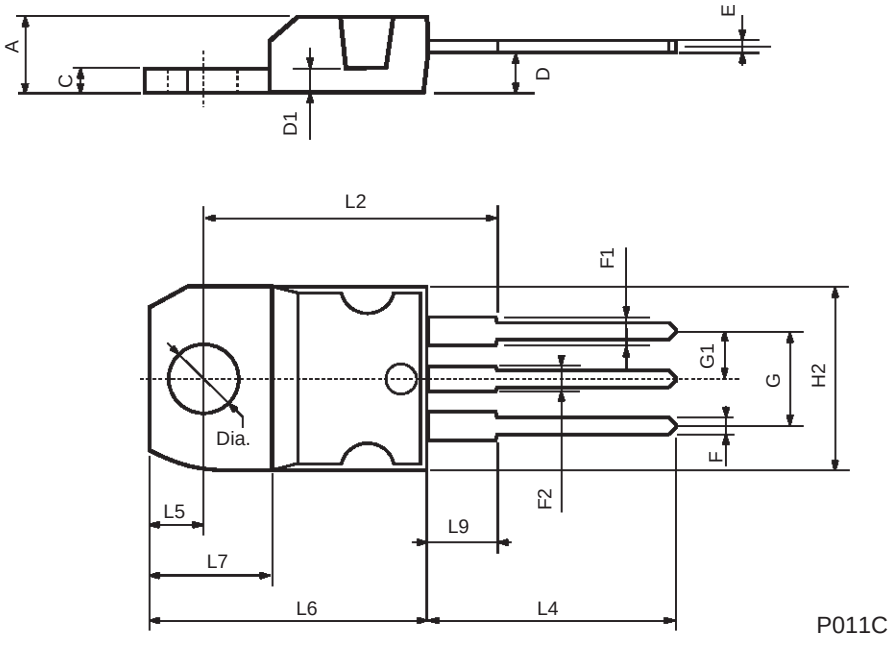

TO-220FP MECHANICAL DATA

DIM.	mm			inch		
	MIN.	TYP.	MAX.	MIN.	TYP.	MAX.
A	4.4		4.6	0.173		0.181
B	2.5		2.7	0.098		0.106
D	2.5		2.75	0.098		0.108
E	0.45		0.7	0.017		0.027
F	0.75		1	0.030		0.039
F1	1.15		1.7	0.045		0.067
F2	1.15		1.7	0.045		0.067
G	4.95		5.2	0.195		0.204
G1	2.4		2.7	0.094		0.106
H	10		10.4	0.393		0.409
L2		16			0.630	
L3	28.6		30.6	1.126		1.204
L4	9.8		10.6	0.385		0.417
L6	15.9		16.4	0.626		0.645
L7	9		9.3	0.354		0.366
Ø	3		3.2	0.118		0.126

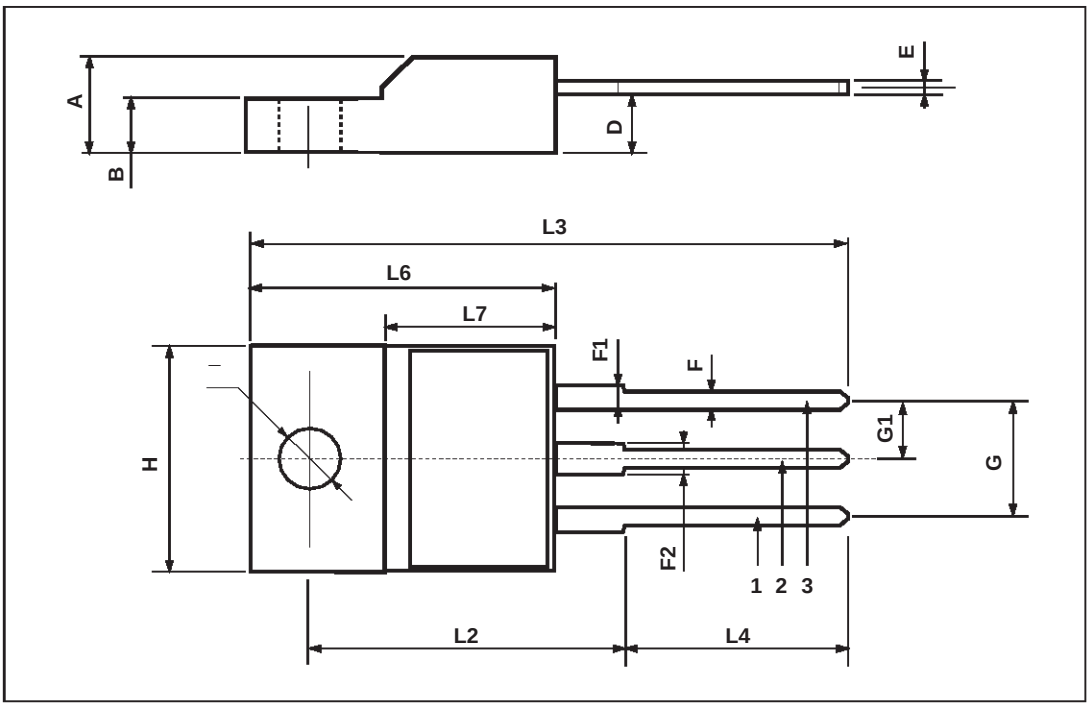

TO-251 (IPAK) MECHANICAL DATA

DIM.	mm			inch		
	MIN.	TYP.	MAX.	MIN.	TYP.	MAX.
A	2.2		2.4	0.086		0.094
A1	0.9		1.1	0.035		0.043
A3	0.7		1.3	0.027		0.051
B	0.64		0.9	0.025		0.031
B2	5.2		5.4	0.204		0.212
B3			0.85			0.033
B5		0.3			0.012	
B6			0.95			0.037
C	0.45		0.6	0.017		0.023
C2	0.48		0.6	0.019		0.023
D	6		6.2	0.236		0.244
E	6.4		6.6	0.252		0.260
G	4.4		4.6	0.173		0.181
H	15.9		16.3	0.626		0.641
L	9		9.4	0.354		0.370
L1	0.8		1.2	0.031		0.047
L2		0.8	1		0.031	0.039

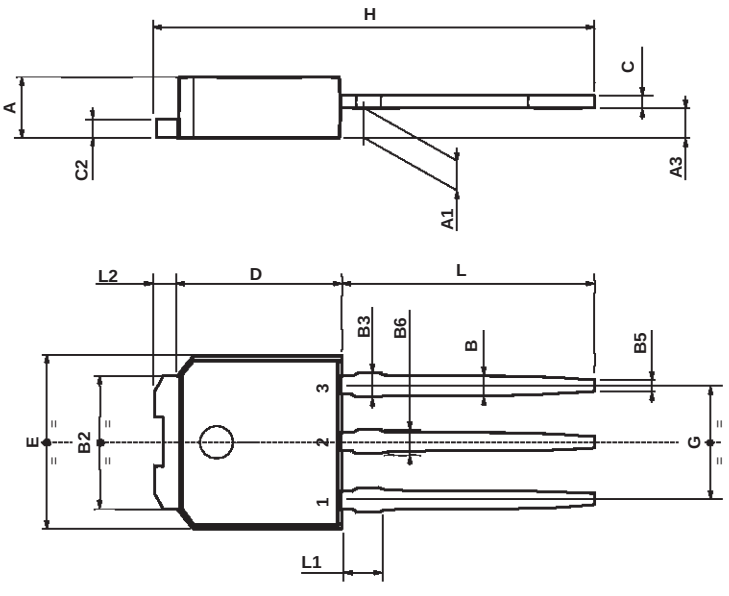

0068771-E

TO-252 (DPAK) MECHANICAL DATA

DIM.	mm			inch		
	MIN.	TYP.	MAX.	MIN.	TYP.	MAX.
A	2.20		2.40	0.087		0.094
A1	0.90		1.10	0.035		0.043
A2	0.03		0.23	0.001		0.009
B	0.64		0.90	0.025		0.035
B2	5.20		5.40	0.204		0.213
C	0.45		0.60	0.018		0.024
C2	0.48		0.60	0.019		0.024
D	6.00		6.20	0.236		0.244
E	6.40		6.60	0.252		0.260
G	4.40		4.60	0.173		0.181
H	9.35		10.10	0.368		0.398
L2		0.8			0.031	
L4	0.60		1.00	0.024		0.039
V2	0°		8°	0°		0°

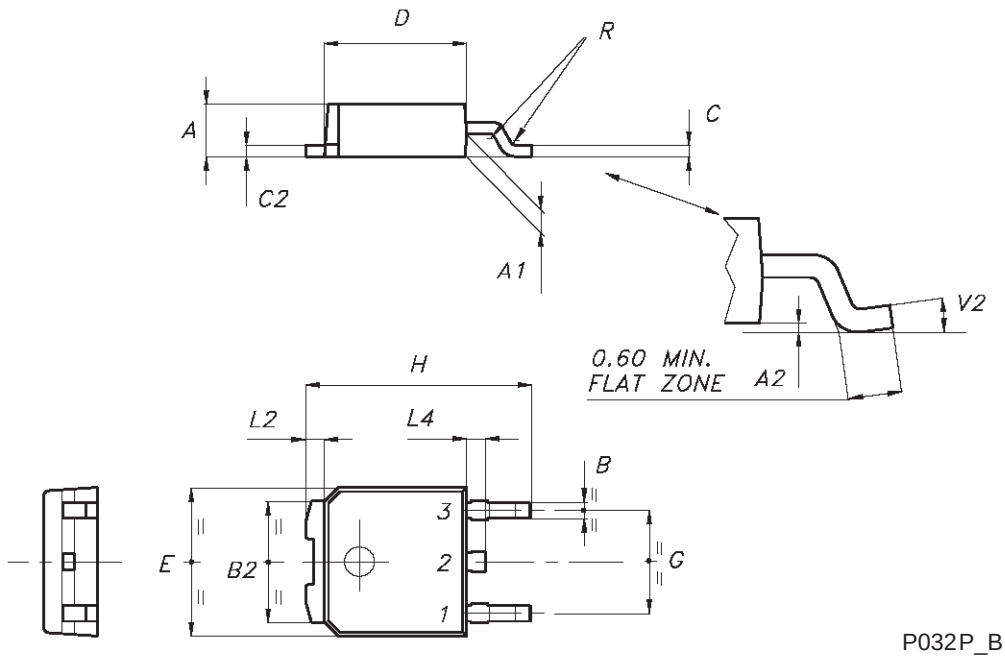

P032P_B

DPAK FOOTPRINT

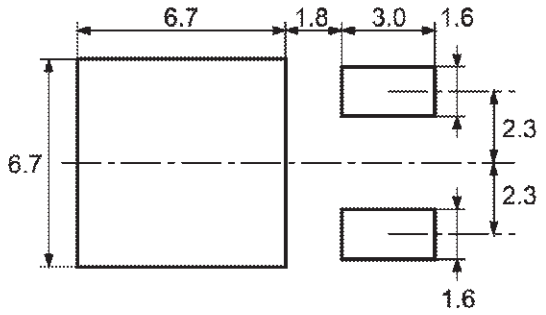

All dimensions are in millimeters

TUBE SHIPMENT (no suffix)*

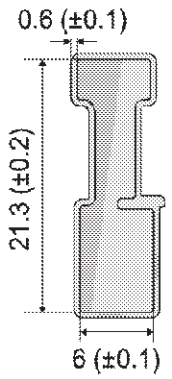

BASE QTY
75
BULK QTY
3000

Tube length 532 (±0.5)

All dimensions are in millimeters

TAPE AND REEL SHIPMENT (suffix "T4")*

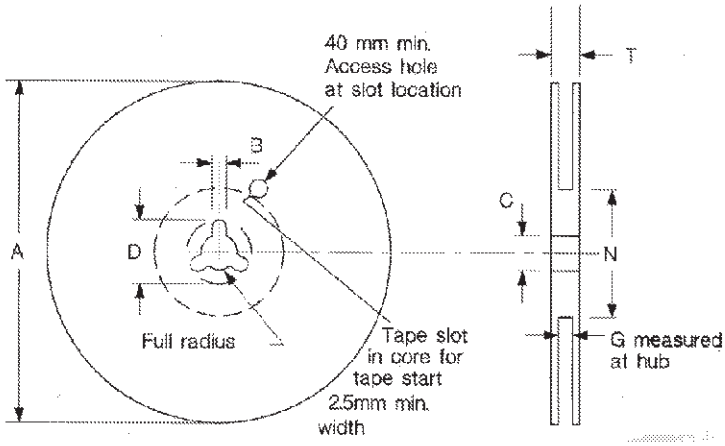

REEL MECHANICAL DATA

DIM.	mm		inch	
	MIN.	MAX.	MIN.	MAX.
A		330		12.992
B	1.5		0.059	
C	12.8	13.2	0.504	0.520
D	20.2		0.795	
G	16.4	18.4	0.645	0.724
N	50		1.968	
T		22.4		0.881

BASE QTY	BULK QTY
2500	2500

TAPE MECHANICAL DATA

DIM.	mm		inch	
	MIN.	MAX.	MIN.	MAX.
A0	6.8	7	0.267	0.275
B0	10.4	10.6	0.409	0.417
B1		12.1		0.476
D	1.5	1.6	0.059	0.063
D1	1.5		0.059	
E	1.65	1.85	0.065	0.073
F	7.4	7.6	0.291	0.299
K0	2.55	2.75	0.100	0.108
P0	3.9	4.1	0.153	0.161
P1	7.9	8.1	0.311	0.319
P2	1.9	2.1	0.075	0.082
R	40		1.574	
W	15.7	16.3	0.618	0.641

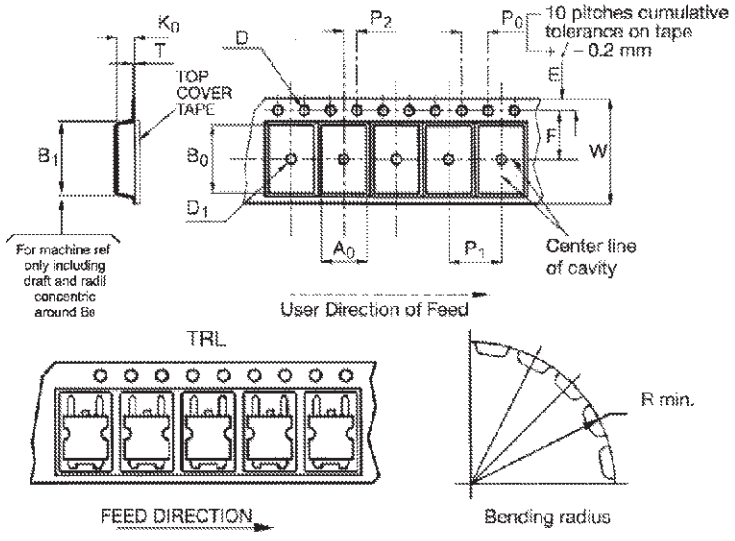

* on sales type

Information furnished is believed to be accurate and reliable. However, STMicroelectronics assumes no responsibility for the consequences of use of such information nor for any infringement of patents or other rights of third parties which may result from its use. No license is granted by implication or otherwise under any patent or patent rights of STMicroelectronics. Specification mentioned in this publication are subject to change without notice. This publication supersedes and replaces all information previously supplied. STMicroelectronics products are not authorized for use as critical components in life support devices or systems without express written approval of STMicroelectronics.

The ST logo is a trademark of STMicroelectronics

© 2000 STMicroelectronics – Printed in Italy – All Rights Reserved

STMicroelectronics GROUP OF COMPANIES

Australia - Brazil - China - Finland - France - Germany - Hong Kong - India - Italy - Japan - Malaysia - Malta - Morocco - Singapore - Spain - Sweden - Switzerland - United Kingdom - U.S.A.

http://www.st.com