BF720

SMALL SIGNAL NPN TRANSISTOR

PRELIMINARY DATA

Type	Marking
BF720	720

- SILICON EPITAXIAL PLANAR NPN HIGH VOLTAGE TRANSISTOR
- SOT-223 PLASTIC PACKAGE FOR SURFACE MOUNTING CIRCUITS
- TAPE AND REEL PACKING
- THE PNP COMPLEMENTARY TYPE IS BF721

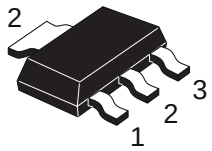

SOT-223

APPLICATIONS

- VIDEO AMPLIFIER CIRCUITS (RGB CATHODE CURRENT CONTROL)
- TELEPHONE WIRELINE INTERFACE (HOOK SWITCHES, DIALER CIRCUITS)

INTERNAL SCHEMATIC DIAGRAM

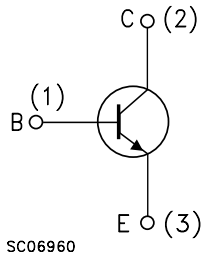

ABSOLUTE MAXIMUM RATINGS

Symbol	Parameter	Value	Unit
V_{CBO}	Collector-Base Voltage (I_E = 0)	300	V
V_{CEO}	Collector-Emitter Voltage (I_B = 0)	300	V
V_{EBO}	Emitter-Base Voltage (I_C = 0)	5	V
I_C	Collector Current	100	mA
I_{CM}	Collector Peak Current	200	mA
P_{tot}	Total Dissipation at T_C = 25 ^oC	1.4	W
T_{stg}	Storage Temperature	-65 to 150	^oC
T_j	Max. Operating Junction Temperature	150	^oC

THERMAL DATA

$R_{thj\text{-}amb}$ •	Thermal Resistance Junction-Ambient	Max	89.3	$^oC/W$

• Device mounted on a PCB area of 1 cm^2

ELECTRICAL CHARACTERISTICS (T_{case} = 25 ^oC unless otherwise specified)

Symbol	Parameter	Test Conditions	Min.	Typ.	Max.	Unit
I_{CBO}	Collector Cut-off Current (I_E = 0)	V_{CB} = 200 V V_{CB} = 200 V T_C = 150 ^oC V_{CB} = 300 V			10 10 100	nA µA µA
I_{EBO}	Emitter Cut-off Current (I_C = 0)	V_{EB} = 5 V			50	nA
$V_{(BR)CEO}$*	Collector-Emitter Breakdown Voltage (I_B = 0)	I_C = 10 mA	300			V
$V_{(BR)EBO}$	Emitter-Base Breakdown Voltage (I_C = 0)	I_E = 100 µA	5			V
$V_{CE(sat)}$*	Collector-Emitter Saturation Voltage	I_C = 30 mA I_B = 5 mA			0.6	V
$V_{BE(sat)}$*	Base-Emitter Saturation Voltage	I_C = 30 mA I_B = 5 mA			1.2	V
h_{FE}*	DC Current Gain	I_C = 25 mA V_{CE} = 20 V	50			
f_T	Transition Frequency	I_C = 15 mA V_{CE} = 10 V f = 20 MHz	60			MHz
C_{CBO}	Collector-Base Capacitance	I_E = 0 V_{CB} = 10 V f = 1MHz		6		pF
C_{EBO}	Emitter-Base Capacitance	I_C = 0 V_{EB} = 2 V f = 1MHz		22		pF

* Pulsed: Pulse duration = 300 µs, duty cycle ≤ 2 %

SOT-223 MECHANICAL DATA

DIM.	mm			inch		
	MIN.	TYP.	MAX.	MIN.	TYP.	MAX.
A			1.80			0.071
B	0.60	0.70	0.80	0.024	0.027	0.031
B1	2.90	3.00	3.10	0.114	0.118	0.122
c	0.24	0.26	0.32	0.009	0.010	0.013
D	6.30	6.50	6.70	0.248	0.256	0.264
e		2.30			0.090	
e1		4.60			0.181	
E	3.30	3.50	3.70	0.130	0.138	0.146
H	6.70	7.00	7.30	0.264	0.276	0.287
V			10°			10°
A1		0.02				

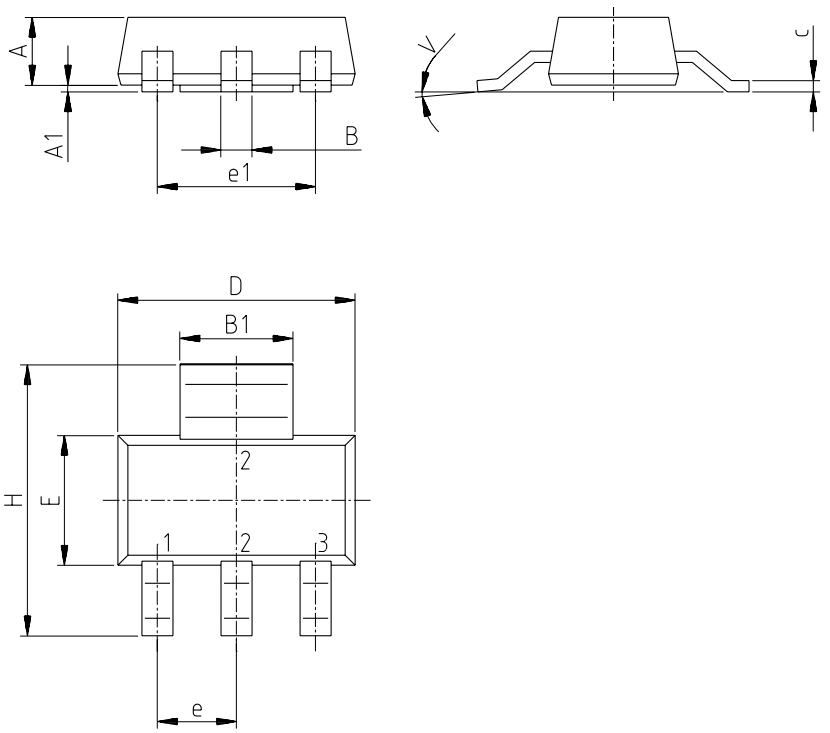

P008B