74LVQ573

OCTAL D-TYPE LATCH WITH 3 STATE OUTPUTS NON INVERTING

- HIGH SPEED: t_{PD} = 5 ns (TYP.) at V_{CC} = 3.3V
- COMPATIBLE WITH TTL OUTPUTS
- LOW POWER DISSIPATION:
  I_{CC} = 4 µA (MAX.) at T_A = 25 °C
- LOW NOISE:
  V_{OLP} = 0.5 V (TYP.) at V_{CC} = 3.3V
- 75Ω TRANSMISSION LINE DRIVING CAPABILITY
- SYMMETRICAL OUTPUT IMPEDANCE:
  $|I_{OH}| = I_{OL}$ = 24 mA (MIN)
- PCI BUS LEVELS GUARANTEED AT 24mA
- BALANCED PROPAGATION DELAYS:
  $t_{PLH} \cong t_{PHL}$
- OPERATING VOLTAGE RANGE:
  V_{CC} (OPR) = 2V to 3.6V (1.2V Data Retention)
- PIN AND FUNCTION COMPATIBLE WITH 74 SERIES 573
- IMPROVED LATCH-UP IMMUNITY

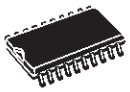

M
(Micro Package)

T
(TSSOP Package)

ORDER CODES :

74LVQ573M 74LVQ573T

DESCRIPTION

The LVQ573 is a low voltage CMOS OCTAL D-TYPE LATCH with 3 STATE OUTPUT NON INVERTING fabricated with sub-micron silicon gate and double-layer metal wiring C^2MOS technology. It is ideal for low power and low noise 3.3V applications.

These 8 bit D-Type flip-flops are controlled by a latch enable input (LE) and an output enable input ($\overline{OE}$).

While the LE input is held at a high level, the Q outputs will follow the data input precisely.

When the LE is taken low, the Q outputs will be latched precisely at the logic level of D input data.

While the ($\overline{OE}$) input is low, the 8 outputs will be in a normal logic state (high or low logic level) and while high level the outputs will be in a high impedance state.

It has better speed performance at 3.3V than 5V LSTTL family combined with the true CMOS low power consumption.

All inputs and outputs are equipped with protection circuits against static discharge, giving them 2KV ESD immunity and transient excess voltage.

PIN CONNECTION AND IEC LOGIC SYMBOLS

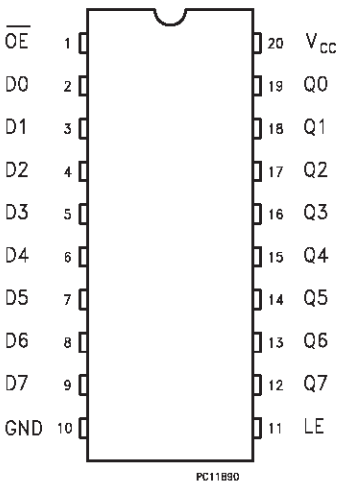

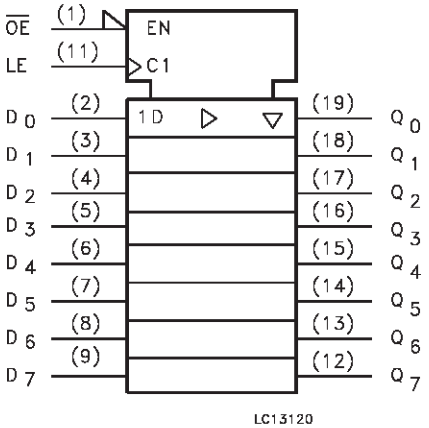

INPUT AND OUTPUT EQUIVALENT CIRCUIT

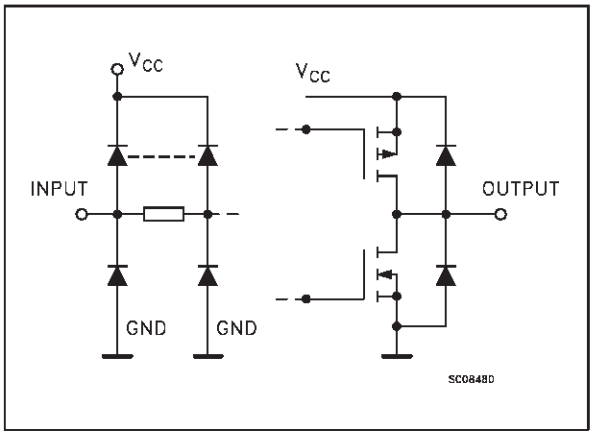

PIN DESCRIPTION

PIN No	SYMBOL	NAME AND FUNCTION
1	$\overline{OE}$	3 State Output Enable Input (Active LOW)
2, 3, 4, 5, 6, 7, 8, 9	D0 to D7	Data Inputs
12, 13, 14, 15, 16, 17, 18, 19	Q0 to Q7	3 State Latch Outputs
11	LE	Latch Enable Input
10	GND	Ground (0V)
20	V_{CC}	Positive Supply Voltage

TRUTH TABLE

INPUTS			OUTPUTS
$\overline{OE}$	LE	D	Q
H	X	X	Z
L	L	X	NO CHANGE *
L	H	L	L
L	H	H	H

X: Don't care
Z: High impedance
* Q outputs are latched at the time when the LE input Is taken low logic level.

LOGIC DIAGRAM

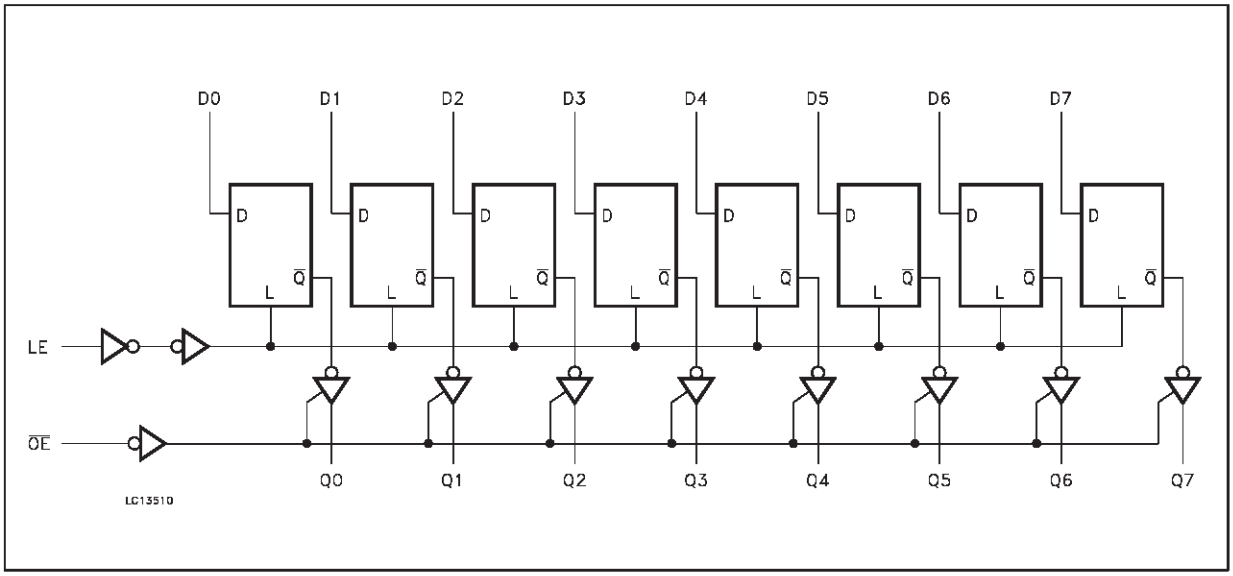

ABSOLUTE MAXIMUM RATINGS

Symbol	Parameter	Value	Unit
V_{CC}	Supply Voltage	-0.5 to +7	V
V_I	DC Input Voltage	-0.5 to V_{CC} + 0.5	V
V_O	DC Output Voltage	-0.5 to V_{CC} + 0.5	V
I_{IK}	DC Input Diode Current	± 20	mA
I_{OK}	DC Output Diode Current	± 20	mA
I_O	DC Output Current	± 50	mA
I_{CC} or I_{GND}	DC V_{CC} or Ground Current	± 400	mA
T_{stg}	Storage Temperature	-65 to +150	°C
T_L	Lead Temperature (10 sec)	300	°C

Absolute Maximum Ratings are those values beyond which damage to the device may occur. Functional operation under these condition is not implied.

RECOMMENDED OPERATING CONDITIONS

Symbol	Parameter	Value	Unit
V_{CC}	Supply Voltage (note 1)	2 to 3.6	V
V_I	Input Voltage	0 to V_{CC}	V
V_O	Output Voltage	0 to V_{CC}	V
T_{op}	Operating Temperature:	-40 to +85	°C
dt/dv	Input Rise and Fall Time (V_{CC} = 3V) (note 2)	0 to 10	ns/V

1) Truth Table guaranteed: 1.2V to 3.6V
2) V_{IN} from 0.8V to 2V

DC SPECIFICATIONS

Symbol	Parameter	Test Conditions			Value					Unit
		V_{CC} (V)			T_A = 25 °C			-40 to 85 °C		
					Min.	Typ.	Max.	Min.	Max.	
V_{IH}	High Level Input Voltage	3.0 to 3.6			2.0			2.0		V
V_{IL}	Low Level Input Voltage						0.8		0.8	V
V_{OH}	High Level Output Voltage	3.0	V_I(*) = V_{IH} or V_{IL}	I_O=-50 µA	2.9	2.99		2.9		V
				I_O=-12 mA	2.58			2.48		
				I_O=-24 mA				2.2		
V_{OL}	Low Level Output Voltage	3.0	V_I(*) = V_{IH} or V_{IL}	I_O=50 µA		0.002	0.1		0.1	V
				I_O=12 mA		0	0.36		0.44	
				I_O=24 mA					0.55	
I_I	Input Leakage Current	3.6	V_I = V_{CC} or GND				±0.1		±1	µA
I_{OZ}	3 State Output Leakage Current	3.6	V_I = V_{IH} or V_{IL} V_O = V_{CC} or GND				±0.25		±2.5	µA
I_{CC}	Quiescent Supply Current	3.6	V_I = V_{CC} or GND				4		40	µA
I_{OLD}	Dynamic Output Current (note 1, 2)	3.6	V_{OLD} = 0.8 V max					36		mA
I_{OHD}			V_{OHD} = 2 V min					-25		mA

1) Maximum test duration 2ms, one output loaded at time
2) Incident wave switching is guaranteed on transmission lines with impedances as low as 50 Ω.
(*) All outputs loaded.

DYNAMIC SWITCHING CHARACTERISTICS

Symbol	Parameter	Test Conditions		Value					Unit
		V_{CC} (V)		T_A = 25 °C			-40 to 85 °C		
				Min.	Typ.	Max.	Min.	Max.	
V_{OLP}	Dynamic Low Voltage Quiet Output (note 1, 2)	3.3	C_L = 50 pF		0.5	0.8			V
V_{OLV}				-0.8	-0.6				
V_{IHD}	Dynamic High Voltage Input (note 1, 3)	3.3				2			
V_{ILD}	Dynamic Low Voltage Input (note 1, 3)	3.3		0.8					

1) Worst case package
2) Max number of outputs defined as (n). Data inputs are driven 0V to 3.3V, (n -1) outputs switching and one output at GND
3) max number of data inputs (n) switching. (n-1) switching 0V to 3.3V. Inputs under test switching: 3.3V to threshold (V_{ILD}), 0V to threshold (V_{IHD}). f=1MHz

AC ELECTRICAL CHARACTERISTICS (C_L = 50 pF, R_L = 500 Ω, Input $t_r = t_f$ =3 ns)

Symbol	Parameter	Test Condition		Value					Unit
		V_{CC} (V)		T_A = 25 °C			-40 to 85 °C		
				Min.	Typ.	Max.	Min.	Max.	
t_{PLH} t_{PHL}	Propagation Delay Time LE to Q	2.7			8.0	17.0		18.0	ns
		3.3(*)			6.5	11.0		12.0	
t_{PLH} t_{PHL}	Propagation Delay Time D to Q	2.7			7.5	15.0		16.0	ns
		3.3(*)			6.0	10.0		11.0	
t_{PLZ} t_{PHZ}	Output Disable Time	2.7			8.5	20.0		21.0	ns
		3.3(*)			7.0	14.0		15.0	
t_{PZL} t_{PZH}	Output Enable Time	2.7			9.0	18.0		19.0	ns
		3.3(*)			7.0	12.0		13.0	
t_w	LE pulse Width, HIGH	2.7			2.0	5.0		6.0	ns
		3.3(*)			1.5	4.0		4.0	
t_{sL} t_{sH}	Setup Time D to LE HIGH or LOW	2.7			0.0	2.5		3.0	ns
		3.3(*)			0.0	2.0		2.5	
t_{hL} t_{hH}	Hold Time D to LE, HIGH or LOW	2.7			0.0	2.5		3.0	ns
		3.3(*)			0.0	2.0		2.5	
t_{OSLZ} t_{OSHL}	Output to Output Skew Time (note 1, 2)	2.7			0.5	1.0		1.5	ns
		3.3(*)			0.5	1.0		1.5	

1) Skew is defined as the absolute value of the difference between the actual propagation delay for any two outputs of the same device switching in the same direction, either HIGH or LOW ($t_{OSLH} = |t_{PLHm} - t_{PLHn}|$, $t_{OSHL} = |t_{PHLm} - t_{PHLn}|$)
2) Parameter guaranteed by design
(*) Voltage range is 3.3V ± 0.3V

CAPACITIVE CHARACTERISTICS

Symbol	Parameter	Test Conditions		Value					Unit
		V_{CC} (V)		T_A = 25 °C			-40 to 85 °C		
				Min.	Typ.	Max.	Min.	Max.	
C_{IN}	Input Capacitance	3.3			4				pF
C_{OUT}	Output Capacitance	3.3			10				pF
C_{PD}	Power Dissipation Capacitance (note 1)	3.3	f_{IN} = 10 MHz		10				pF

1) C_{PD} is defined as the value of the IC's internal equivalent capacitance which is calculated from the operating current consumption without load. (Refer to Test Circuit). Average operting current can be obtained by the following equation. $I_{CC}(opr) = C_{PD} \bullet V_{CC} \bullet f_{IN} + I_{CC}/*$ (per Latch)

TEST CIRCUIT

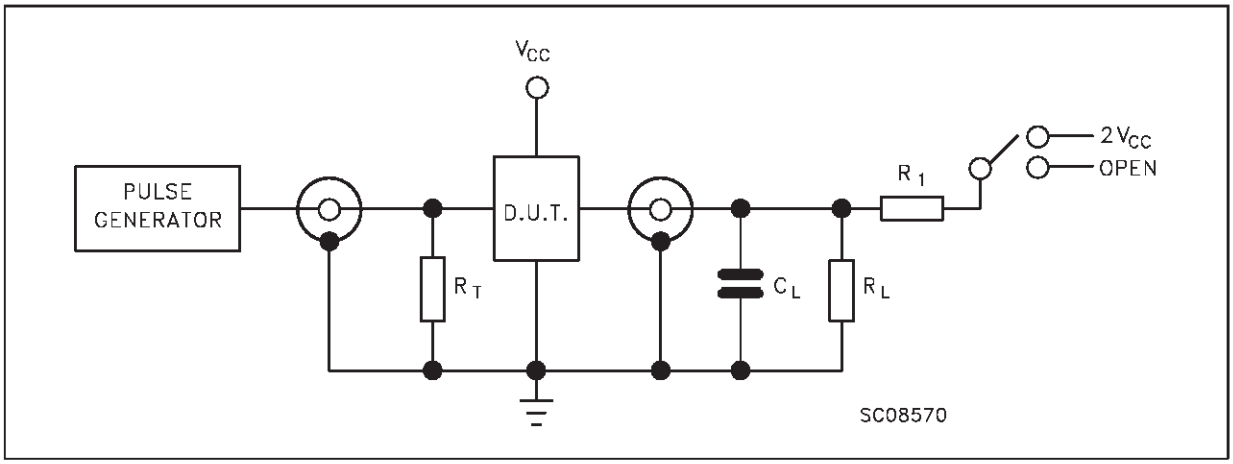

TEST	SWITCH
t_{PLH}, t_{PHL}	Open
t_{PZL}, t_{PLZ}	$2V_{CC}$
t_{PZH}, t_{PHZ}	Open

C_L = 50 pF or equivalent (includes jig and probe capacitance)
$R_L = R_1$ = 500Ω or equivalent
$R_T = Z_{OUT}$ of pulse generator (typically 50Ω)

WAVEFORM 1: LE TO Qn PROPAGATION DELAYS, LE MINIMUM PULSE WIDTH, Dn TO LE SETUP AND HOLD TIMES (f=1MHz; 50% duty cycle)

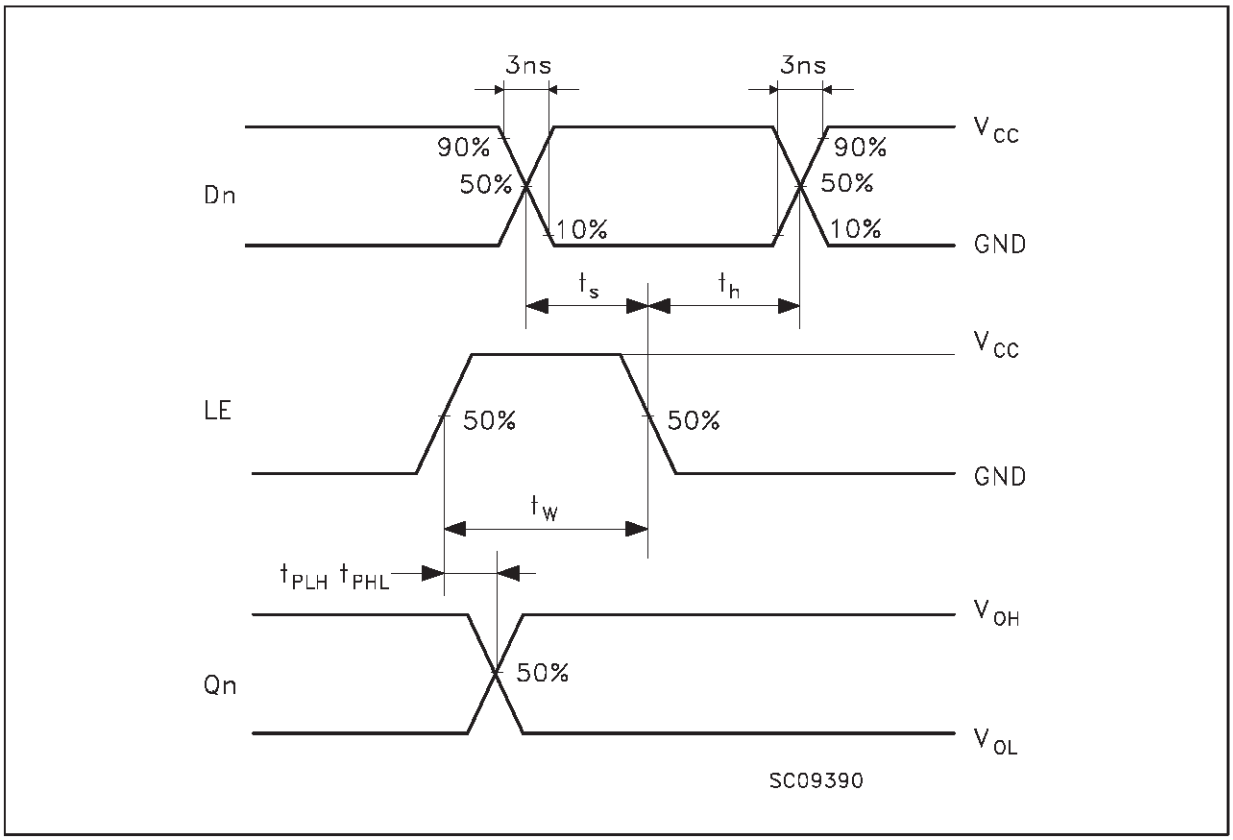

WAVEFORM 2: OUTPUT ENABLE AND DISABLE TIMES (f=1MHz; 50% duty cycle)

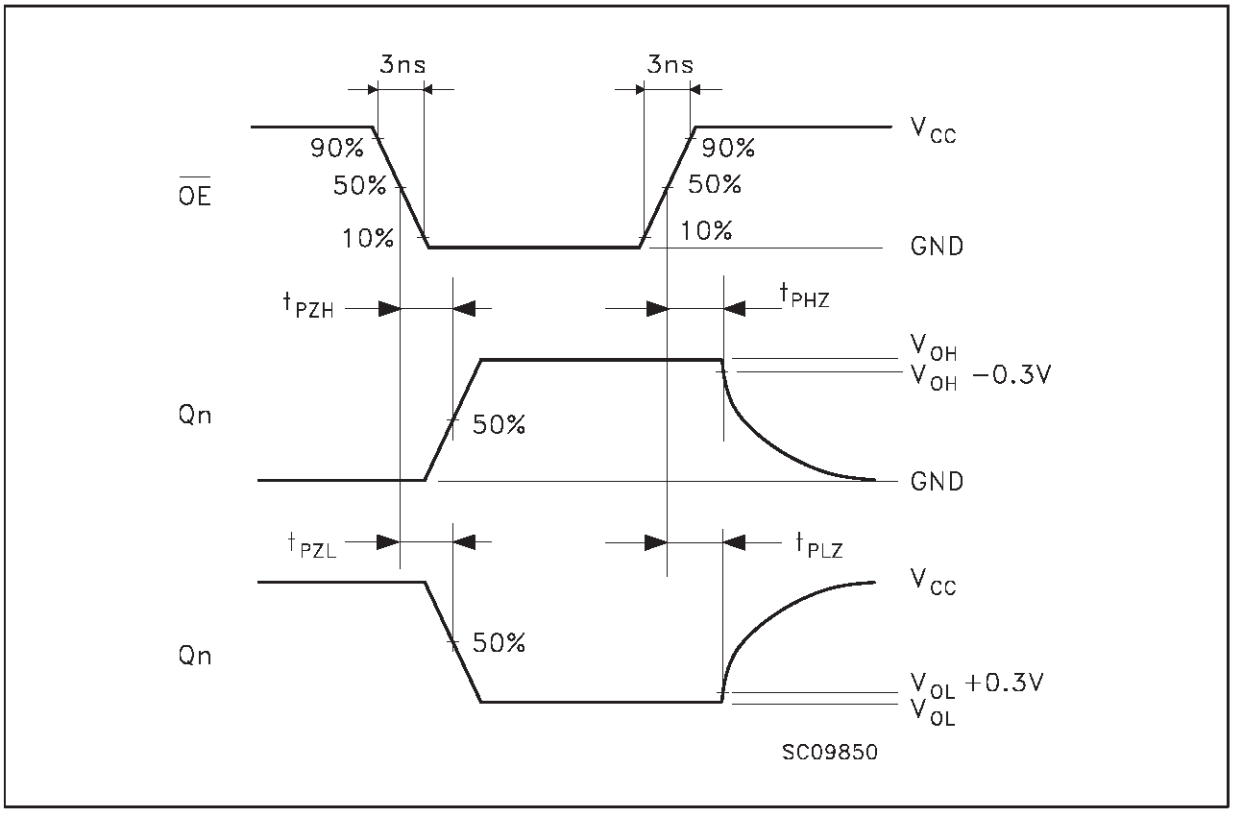

WAVEFORM 3: Dn TO Qn PROPAGATION DELAY TIME (f=1MHz; 50% duty cycle)

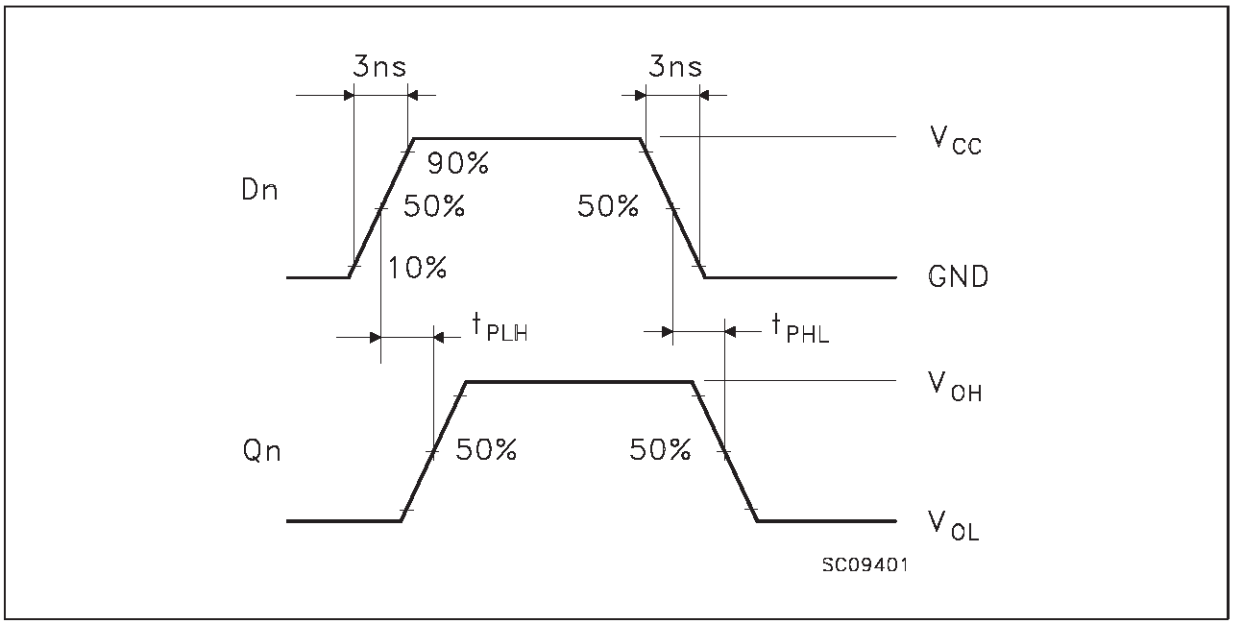

SO-20 MECHANICAL DATA

DIM.	mm			inch		
	MIN.	TYP.	MAX.	MIN.	TYP.	MAX.
A			2.65			0.104
a1	0.10		0.20	0.004		0.007
a2			2.45			0.096
b	0.35		0.49	0.013		0.019
b1	0.23		0.32	0.009		0.012
C		0.50			0.020	
c1	45 (typ.)					
D	12.60		13.00	0.496		0.512
E	10.00		10.65	0.393		0.419
e		1.27			0.050	
e3		11.43			0.450	
F	7.40		7.60	0.291		0.299
L	0.50		1.27	0.19		0.050
M			0.75			0.029
S	8 (max.)					

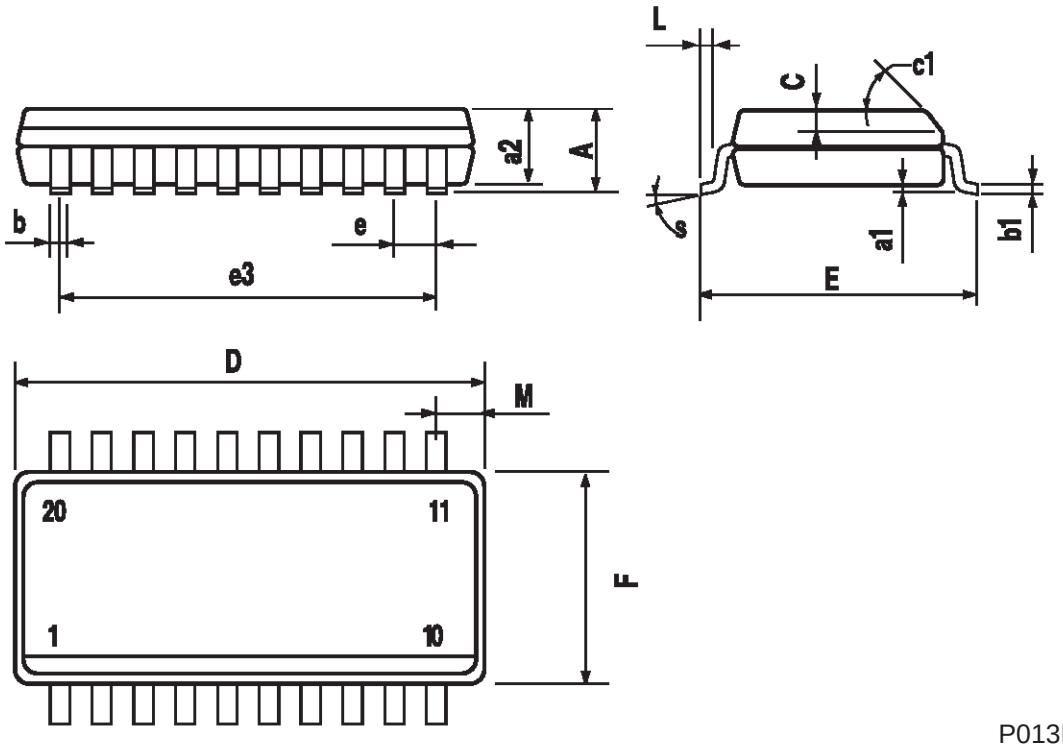

P013L

TSSOP20 MECHANICAL DATA

DIM.	mm			inch		
	MIN.	TYP.	MAX.	MIN.	TYP.	MAX.
A			1.1			0.433
A1	0.05	0.10	0.15	0.002	0.004	0.006
A2	0.85	0.9	0.95	0.335	0.354	0.374
b	0.19		0.30	0.0075		0.0118
c	0.09		0.2	0.0035		0.0079
D	6.4	6.5	6.6	0.252	0.256	0.260
E	6.25	6.4	6.5	0.246	0.252	0.256
E1	4.3	4.4	4.48	0.169	0.173	0.176
e		0.65 BSC			0.0256 BSC	
K	0°	4°	8°	0°	4°	8°
L	0.50	0.60	0.70	0.020	0.024	0.028

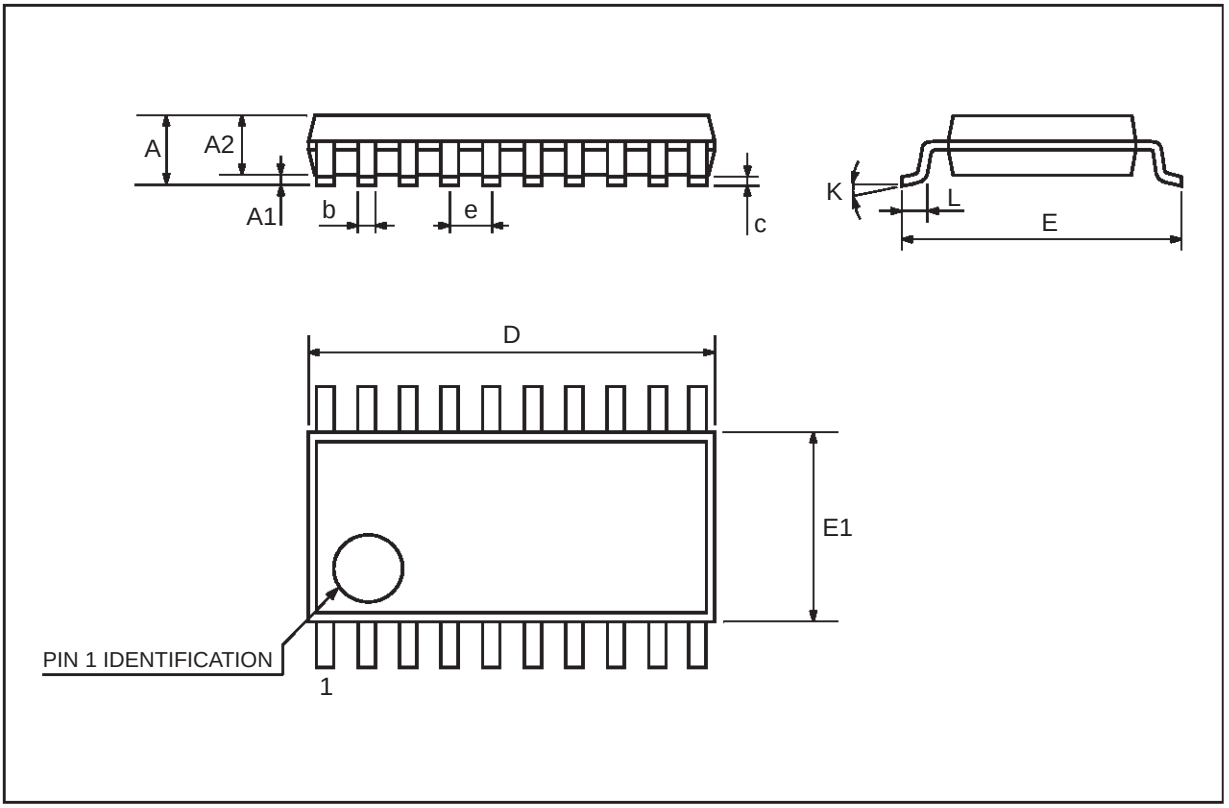

Information furnished is believed to be accurate and reliable. However, STMicroelectronics assumes no responsibility for the consequences of use of such information nor for any infringement of patents or other rights of third parties which may result from its use. No license is granted by implication or otherwise under any patent or patent rights of STMicroelectronics. Specification mentioned in this publication are subject to change without notice. This publication supersedes and replaces all information previously supplied. STMicroelectronics products are not authorized for use as critical components in life support devices or systems without express written approval of STMicroelectronics.

The ST logo is a trademark of STMicroelectronics

© 1999 STMicroelectronics – Printed in Italy – All Rights Reserved

STMicroelectronics GROUP OF COMPANIES

Australia - Brazil - Canada - China - France - Germany - Italy - Japan - Korea - Malaysia - Malta - Mexico - Morocco - The Netherlands - Singapore - Spain - Sweden - Switzerland - Taiwan - Thailand - United Kingdom - U.S.A.

http://www.st.com