74V1T03

SINGLE 2-INPUT OPEN DRAIN NAND GATE

PRELIMINARY DATA

- HIGH SPEED: t_{PD} = 7 ns (TYP.) at V_{CC} = 5V
- LOW POWER DISSIPATION:
  I_{CC} = 1 µA (MAX.) at T_A = 25 ^{o}C
- COMPATIBLE WITH TTL OUTPUTS:
  V_{IH} = 2V (MIN), V_{IL} = 0.8V (MAX)
- POWER DOWN PROTECTION ON INPUTS
- OPERATING VOLTAGE RANGE:
  V_{CC} (OPR) = 4.5V to 5.5V
- IMPROVED LATCH-UP IMMUNITY

S	C
(SOT23-5L)	(SC-70)

ORDER CODE:

74V1T03S	74V1T03C

DESCRIPTION

The 74V1T03 is an advanced high-speed CMOS SINGLE 2-INPUT OPEN DRAIN NAND GATE fabricated with sub-micron silicon gate and double-layer metal wiring C^2MOS technology.

The internal circuit is composed of 3 stages including buffer output, which provide high noise immunity and stable output.

This device can, with an external pull-up resistor, be used in wired AND configuration. This device can also be used as a led driver in any other application requiring a current sink.

Power down protection is provided on all inputs and 0 to 7V can be accepted on inputs with no regard to the supply voltage. This device can be used to interface 5V to 3V.

PIN CONNECTION AND IEC LOGIC SYMBOLS

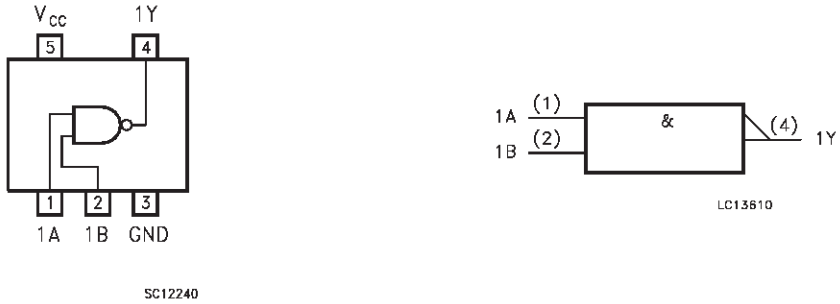

INPUT EQUIVALENT CIRCUIT

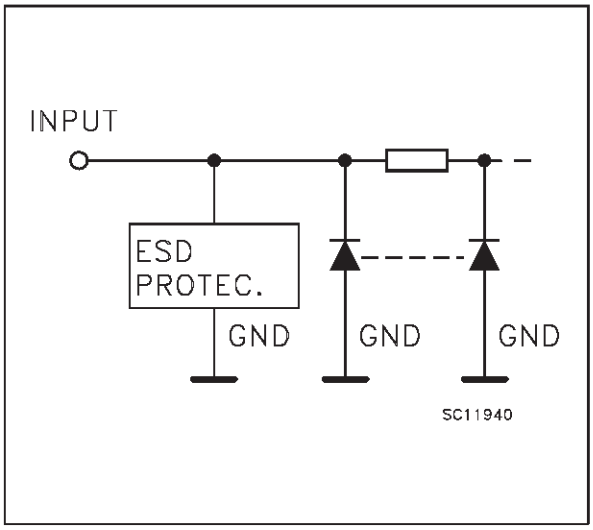

PIN DESCRIPTION

PIN No	SYMBOL	NAME AND FUNCTION
1	1A	Data Input
2	1B	Data Input
4	1Y	Data Output
3	GND	Ground (0V)
5	V_{CC}	Positive Supply Voltage

TRUTH TABLE

A	B	Y
L	L	Z
L	H	Z
H	L	Z
H	H	L

Z: High Impedance

ABSOLUTE MAXIMUM RATINGS

Symbol	Parameter	Value	Unit
V_{CC}	Supply Voltage	-0.5 to +7.0	V
V_I	DC Input Voltage	-0.5 to +7.0	V
V_O	DC Output Voltage	-0.5 to V_{CC} + 0.5	V
I_{IK}	DC Input Diode Current	- 20	mA
I_{OK}	DC Output Diode Current	± 20	mA
I_O	DC Output Current	25	mA
I_{CC} or I_{GND}	DC V_{CC} or Ground Current	± 50	mA
T_{stg}	Storage Temperature	-65 to +150	^oC
T_L	Lead Temperature (10 sec)	260	^oC

Absolute Maximum Ratings are those values beyond which damage to the device may occur. Functional operation under these condition is not implied.

RECOMMENDED OPERATING CONDITIONS

Symbol	Parameter	Value	Unit
V_{CC}	Supply Voltage	4.5 to 5.5	V
V_I	Input Voltage	0 to 5.5	V
V_O	Output Voltage	0 to V_{CC}	V
T_{op}	Operating Temperature	-40 to +85	^oC
dt/dv	Input Rise and Fall Time (see note 1) (V_{CC} = 5.0 ± 0.5V)	0 to 20	ns/V

1) V_{IN} from 0.8V to 2 V

DC SPECIFICATIONS

Symbol	Parameter	Test Conditions		Value					Unit
		V_{CC} (V)		T_A = 25 °C			-40 to 85 °C		
				Min.	Typ.	Max.	Min.	Max.	
V_{IH}	High Level Input Voltage	4.5 to 5.5		2			2		V
V_{IL}	Low Level Input Voltage	4.5 to 5.5				0.8		0.8	V
V_{OL}	Low Level Output Voltage	4.5	I_O=50 µA		0.0	0.1		0.1	V
		4.5	I_O=8 mA			0.36		0.44	
I_{OZ}	High Impedance Output Leakage Current	5.5	$V_I = V_{IH}$ or V_{IL} $V_O = V_{CC}$ or GND			±0.25		±2.5	µA
I_I	Input Leakage Current	0 to 5.5	V_I = 5.5V or GND			±0.1		±1.0	µA
I_{CC}	Quiescent Supply Current	5.5	$V_I = V_{CC}$ or GND			1		10	µA
ΔI_{CC}	Additional Worst Case Supply Current	5.5	One Input at 3.4V, other input at V_{CC} or GND			1.35		1.5	mA

AC ELECTRICAL CHARACTERISTICS (Input $t_r = t_f$ =3 ns)

Symbol	Parameter	Test Condition			Value					Unit
		V_{CC} (*) (V)	C_L (pF)		T_A = 25 °C			-40 to 85 °C		
					Min.	Typ.	Max.	Min.	Max.	
t_{PLz} t_{PzL}	Propagation Delay Time	5.0	15	R_L = 1 KΩ		6.3	7.0	1.0	8.0	ns
		5.0	50	R_L = 1 KΩ		7.0	8.0	1.0	9.0	

(*) Voltage range is 5V ± 0.5V

CAPACITIVE CHARACTERISTICS

Symbol	Parameter	Test Conditions	Value					Unit
			T_A = 25 °C			-40 to 85 °C		
			Min.	Typ.	Max.	Min.	Max.	
C_{IN}	Input Capacitance			4	10		10	pF
C_{OUT}	Output Capacitance			5				pF
C_{PD}	Power Dissipation Capacitance (note 1)			10.5				pF

1) C_{PD} is defined as the value of the IC's internal equivalent capacitance which is calculated from the operating current consumption without load. (Refer to Test Circuit). Average operating current can be obtained by the following equation. $I_{CC}(opr) = C_{PD} \bullet V_{CC} \bullet f_{IN} + I_{CC}$

TEST CIRCUIT

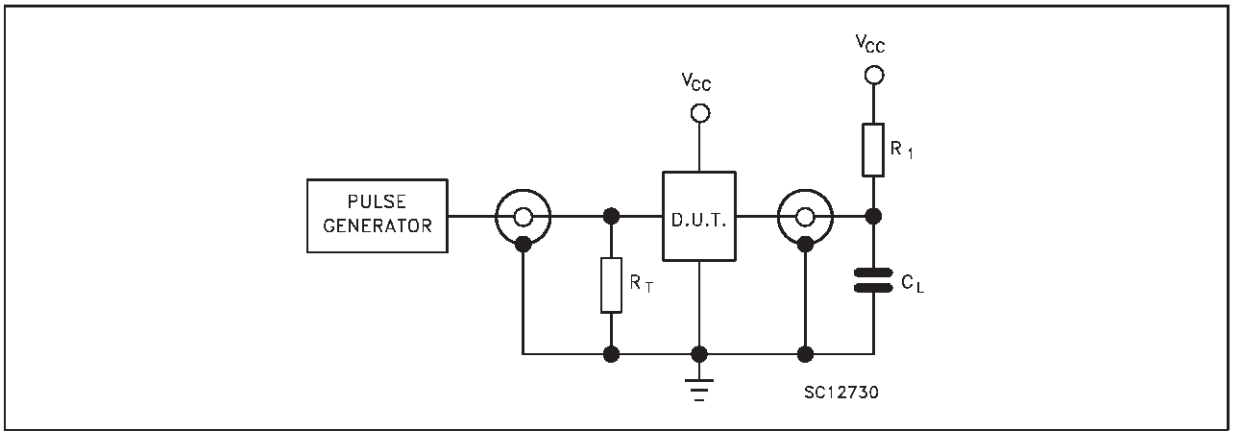

C_L = 15/50 pF or equivalent (includes jig and probe capacitance)
$R_L = R_1$ = 1KΩ or equivalent
$R_T = Z_{OUT}$ of pulse generator (typically 50Ω)

WAVEFORM: PROPAGATION DELAYS (f=1MHz; 50% duty cycle)

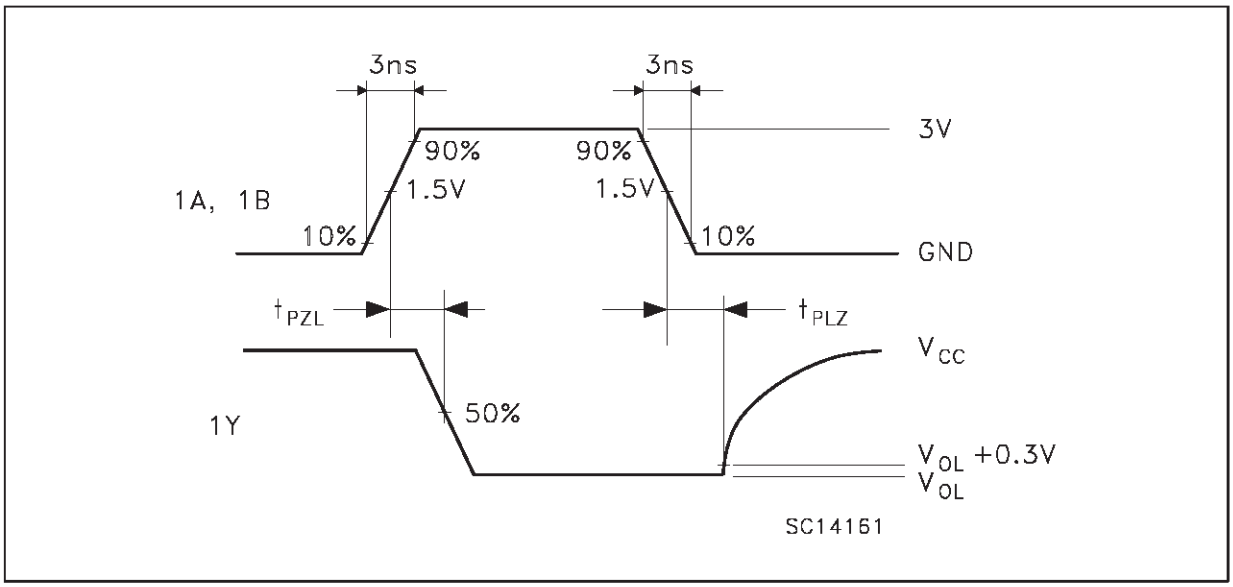

SOT23-5L MECHANICAL DATA

DIM.	mm			mils		
	MIN.	TYP.	MAX.	MIN.	TYP.	MAX.
A	0.90		1.45	35.4		57.1
A1	0.00		0.15	0.0		5.9
A2	0.90		1.30	35.4		51.2
b	0.35		0.50	13.7		19.7
C	0.09		0.20	3.5		7.8
D	2.80		3.00	110.2		118.1
E	2.60		3.00	102.3		118.1
E1	1.50		1.75	59.0		68.8
L	0.35		0.55	13.7		21.6
e		0.95			37.4	
e1		1.9			74.8	

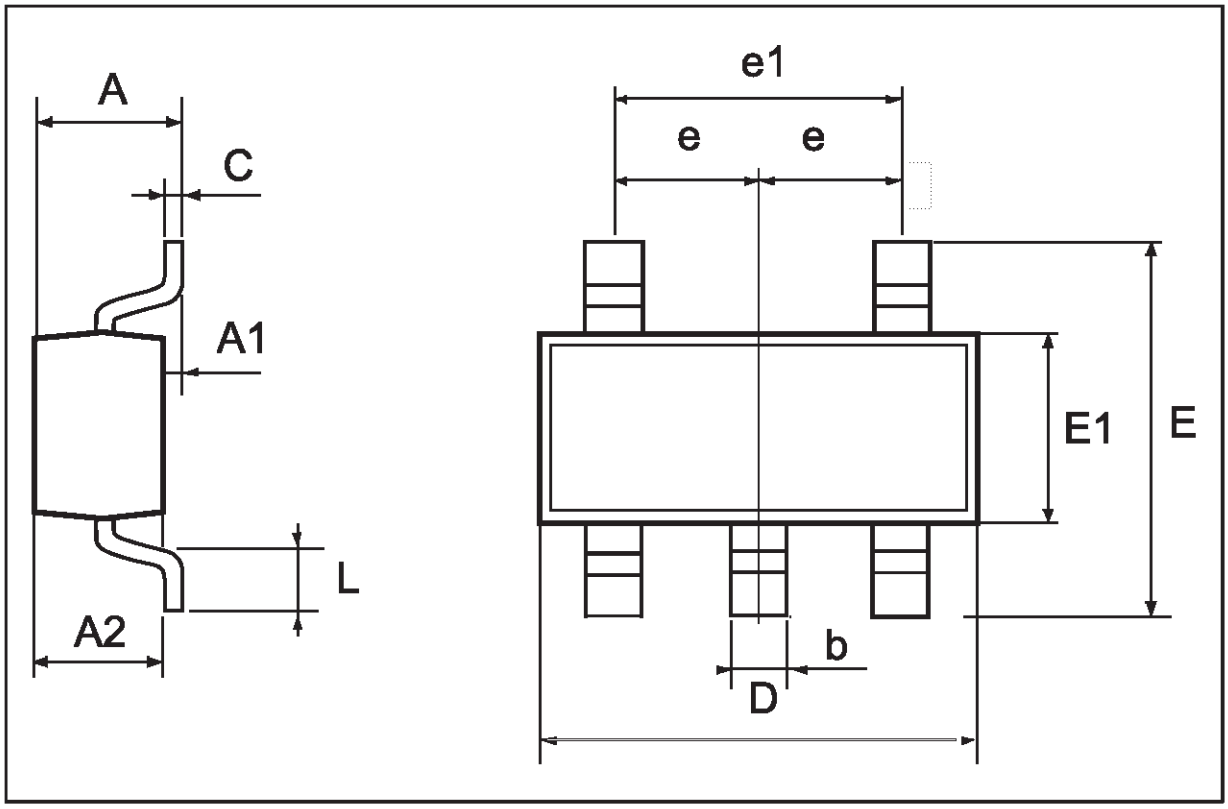

SC-70 MECHANICAL DATA

DIM.	mm			mils		
	MIN.	TYP.	MAX.	MIN.	TYP.	MAX.
A	0.80		1.10	31.5		43.3
A1	0.00		0.10	0.0		3.9
A2	0.80		1.00	31.5		39.4
b	0.15		0.30	5.9		11.8
C	0.10		0.18	3.9		7.1
D	1.80		2.20	70.9		86.6
E	1.80		2.40	70.9		94.5
E1	1.15		1.35	45.3		53.1
L	0.10		0.30	3.9		11.8
e		0.65			25.6	
e1		1.3			51.2	

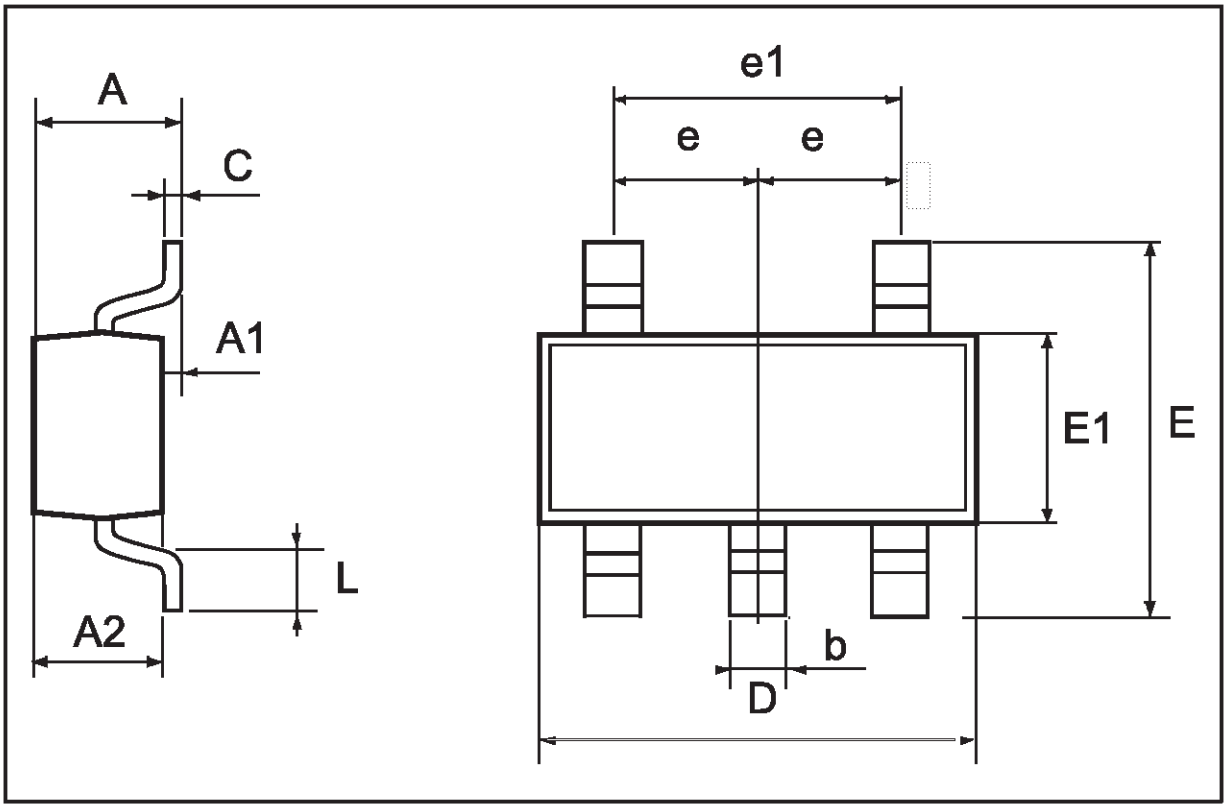

Information furnished is believed to be accurate and reliable. However, STMicroelectronics assumes no responsibility for the consequences of use of such information nor for any infringement of patents or other rights of third parties which may result from its use. No license is granted by implication or otherwise under any patent or patent rights of STMicroelectronics. Specification mentioned in this publication are subject to change without notice. This publication supersedes and replaces all information previously supplied. STMicroelectronics products are not authorized for use as critical components in life support devices or systems without express written approval of STMicroelectronics.

The ST logo is a trademark of STMicroelectronics

© 1999 STMicroelectronics – Printed in Italy – All Rights Reserved

STMicroelectronics GROUP OF COMPANIES

Australia - Brazil - Canada - China - France - Germany - Italy - Japan - Korea - Malaysia - Malta - Mexico - Morocco - The Netherlands - Singapore - Spain - Sweden - Switzerland - Taiwan - Thailand - United Kingdom - U.S.A.

http://www.st.com

.