SGS-THOMSON MICROELECTRONICS

HCC/HCF4018B

PRESETTABLE DIVIDE-BY-N COUNTER

- MEDIUM SPEED OPERATION - 10MHz (typ.) AT $V_{DD} - V_{SS} = 10V$
- FULLY STATIC OPERATION
- QUIESCENT CURRENT SPECIFIED TO 20V FOR HCC DEVICE
- STANDARDIZED SYMMETRICAL OUTPUT CHARACTERISTICS
- INPUT CURRENT OF 100nA AT 18V AND 25°C FOR HCC DEVICE
- 100% TESTED FOR QUIESCENT CURRENT
- 5V, 10V, AND 15V PARAMETRIC RATINGS
- MEETS ALL REQUIREMENTS OF JEDEC TENTATIVE STANDARD N° 13A, "STANDARD SPECIFICATIONS FOR DESCRIPTION OF "B" SERIES CMOS DEVICES"

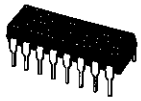

EY
(Plastic Package)

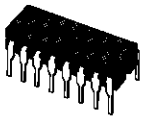

F
(Ceramic Frit Seal Package)

M1
(Micro Package)

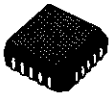

C1
(Plastic Chip Carrier)

ORDER CODES :

HCC4018BF	HCF4018BM1
HCF4018BEY	HCF4018BC1

DESCRIPTION

The HCC4018B (extended temperature range) and **HCF4018B** (intermediate temperature range) are monolithic integrated circuit, available in 16-lead dual in-line plastic or ceramic package and plastic micropackage.

The **HCC/HCF4018B** types consist of 5 Johnson-Counter stages, buffered Q outputs from each stage, and counter preset control gating. CLOCK, RESET, DATA, PRESET ENABLE, and 5 individual JAM inputs are provided. Divide by 10, 8, 6, 4, or 2 counter configurations can be implemented by feeding the $\overline{Q5}$, $\overline{Q4}$, $\overline{Q3}$, $\overline{Q2}$, $\overline{Q1}$ signals, respectively, back to the DATA input.

Divide-by-9, 7, 5, or 3 counter configurations can be implemented by the use of a **HCC/HCF4011B** gate package to properly gate the feedback connection to the DATA input. Divide-by-functions greater than 10 can be achieved by use of multiple **HCC/HCF 4018B** units. The counter is advanced one count at the positive clock-signal transition. Schmitt Trigger action on the clock line permits unlimited clock rise and fall times. A high RESET signal clears the counter to an all-zero condition. A high PRESENT-ENABLE signal allows information on the JAM inputs to preset the counter. Anti-lock gating is provided to assure the proper counting sequence.

PIN CONNECTIONS

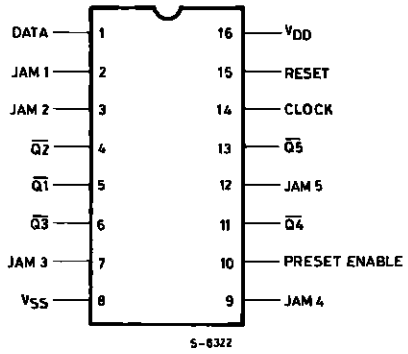

FUNCTIONAL DIAGRAM

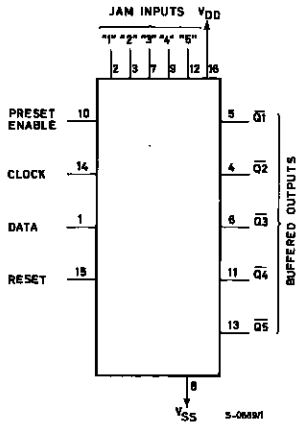

ABSOLUTE MAXIMUM RATINGS

Symbol	Parameter	Value	Unit
V_{DD}*	Supply Voltage : **HCC** Types **HCF** Types	– 0.5 to + 20 – 0.5 to + 18	V V
V_i	Input Voltage	– 0.5 to V_{DD} + 0.5	V
I_I	DC Input Current (any one input)	± 10	mA
P_{tot}	Total Power Dissipation (per package) Dissipation per Output Transistor for T_{op} = Full Package-temperature Range	200 100	mW mW
T_{op}	Operating Temperature : **HCC** Types **HCF** Types	– 55 to + 125 – 40 to + 85	°C °C
T_{stg}	Storage Temperature	– 65 to + 150	°C

Stresses above those listed under "Absolute Maximum Ratings" may cause permanent damage to the device. This is a stress rating only and functional operation of the device at these or any other conditions above those indicated in the operational sections of this specification is not implied. Exposure to absolute maximum rating conditions for external periods may affect device reliability.
* All voltage values are refered to V_{SS} pin voltage.

RECOMMENDED OPERATING CONDITIONS

Symbol	Parameter	Value	Unit
V_{DD}	Supply Voltage : **HCC** Types **HCF** Types	3 to 18 3 to 15	V V
V_I	Input Voltage	0 to V_{DD}	V
T_{op}	Operating Temperature : **HCC** Types **HCF** Types	– 55 to + 125 – 40 to + 85	°C °C

LOGIC DIAGRAM

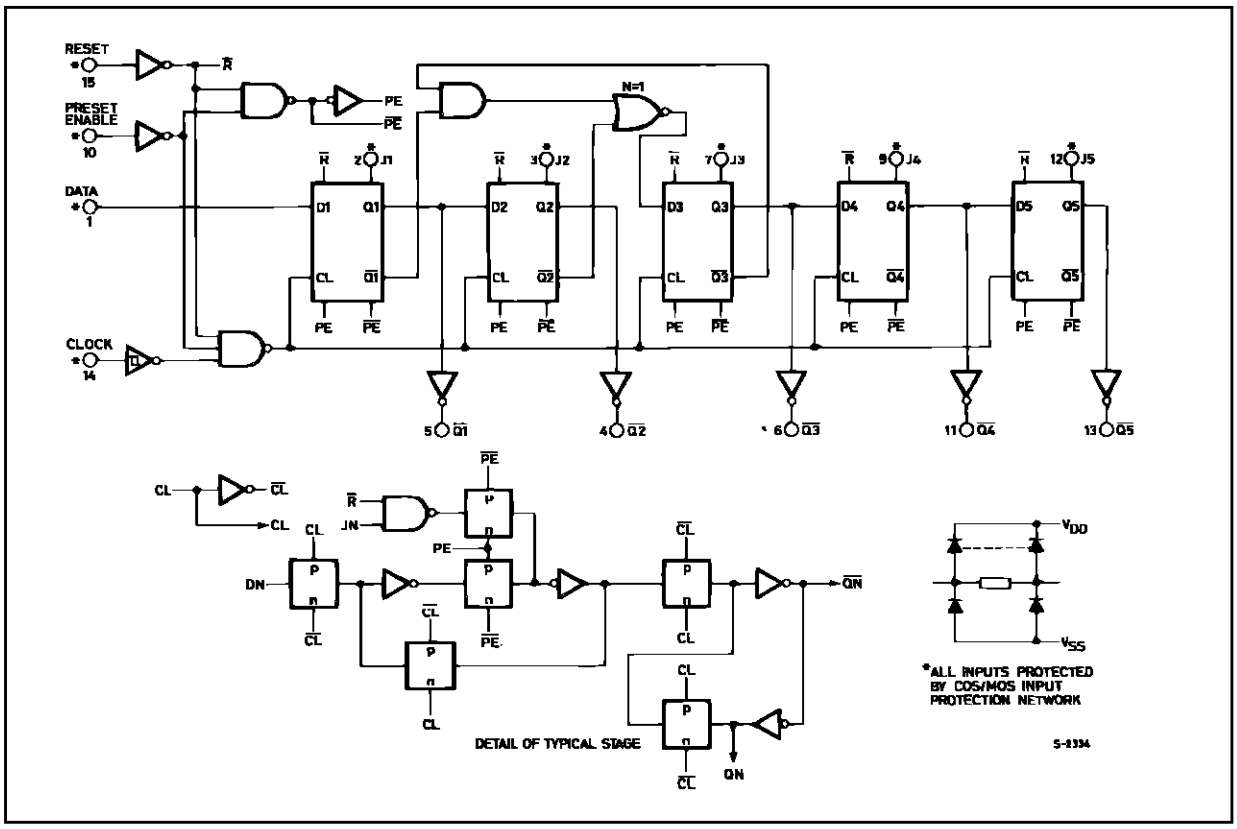

TIMING DIAGRAM

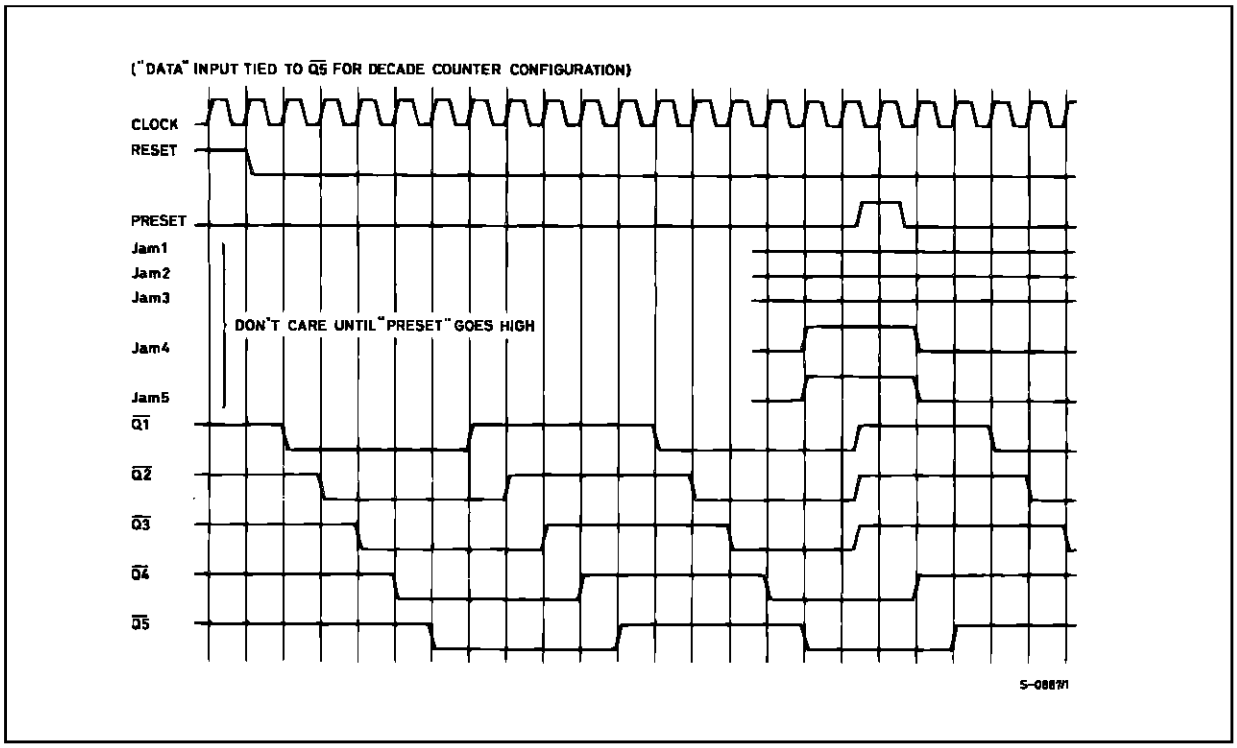

STATIC ELECTRICAL CHARACTERISTICS (under recommended operating conditions)

Symbol	Parameter		Test Conditions				Value							Unit
			V_I (V)	V_O (V)	$\|I_O\|$ (µA)	V_{DD} (V)	T_{Low}*		25°C			T_{High}*		
							Min.	Max.	Min.	Typ.	Max.	Min.	Max.	
I_L	Quiescent Current	HCC Types	0/ 5			5		5		0.04	5		150	µA
			0/10			10		10		0.04	10		300	
			0/15			15		20		0.04	20		600	
			0/20			20		100		0.08	100		3000	
		HCF Types	0/ 5			5		20		0.04	20		150	
			0/10			10		40		0.04	40		300	
			0/15			15		80		0.04	80		600	
V_{OH}	Output High Voltage		0/ 5		< 1	5	4.95		4.95			4.95		V
			0/10		< 1	10	9.95		9.95			9.95		
			0/15		< 1	15	14.95		14.95			14.95		
V_{OL}	Output Low Voltage		5/0		< 1	5		0.05			0.05		0.05	V
			10/0		< 1	10		0.05			0.05		0.05	
			15/0		< 1	15		0.05			0.05		0.05	
V_{IH}	Input High Voltage			0.5/4.5	< 1	5	3.5		3.5			3.5		V
				1/9	< 1	10	7		7			7		
				1.5/13.5	< 1	15	11		11			11		
V_{IL}	Input Low Voltage			4.5/0.5	< 1	5		1.5			1.5		1.5	V
				9/1	< 1	10		3			3		3	
				13.5/1.5	< 1	15		4			4		4	
I_{OH}	Output Drive Current	HCC Types	0/ 5	2.5		5	– 2		– 1.6	– 3.2		– 1.15		mA
			0/ 5	4.6		5	– 0.64		– 0.51	– 1		– 0.36		
			0/10	9.5		10	– 1.6		– 1.3	– 2.6		– 0.9		
			0/15	13.5		15	– 4.2		– 3.4	– 6.8		– 2.4		
		HCF Types	0/ 5	2.5		5	– 1.53		– 1.36	– 3.2		– 1.1		
			0/ 5	4.6		5	– 0.52		– 0.44	– 1		– 0.36		
			0/10	9.5		10	– 1.3		– 1.1	– 2.6		– 0.9		
			0/15	13.5		15	– 3.6		– 3.0	– 6.8		– 2.4		
I_{OL}	Output Sink Current	HCC Types	0/ 5	0.4		5	0.64		0.51	1		0.36		mA
			0/10	0.5		10	1.6		1.3	2.6		0.9		
			0/15	1.5		15	4.2		3.4	6.8		2.4		
		HCF Types	0/ 5	0.4		5	0.52		0.44	1		0.36		
			0/10	0.5		10	1.3		1.1	2.6		0.9		
			0/15	1.5		15	3.6		3.0	6.8		2.4		
I_{IH}, I_{IL}	Input Leakage Current	HCC Types	0/18	Any Input		18		± 0.1		$\pm 10^{-5}$	± 0.1		± 1	µA
		HCF Types	0/15			15		± 0.3		$\pm 10^{-5}$	± 0.3		± 1	
C_I	Input Capacitance			Any Input						5	7.5			pF

* T_{Low} = – 55°C for **HCC** device : – 40°C for **HCF** device.
* T_{High} = +125°C for **HCC** device : + 85°C for **HCF** device.
The Noise Margin for both "1" and "0" level is : 1V min. with V_{DD} = 5V, 2V min. with V_{DD} = 10V, 2.5 V min. with V_{DD} = 15V.

DYNAMIC ELECTRICAL CHARACTERISTICS (T_{amb} = 25°C, C_L = 50pF, R_L = 200kΩ, typical temperature coefficient for all V_{DD} values is 0.3%/°C, all input rise and fall times = 20ns)

Symbol	Parameter	Test Conditions		Value			Unit
			V_{DD} (V)	Min.	Typ.	Max.	
t_{PLH}, t_{PHL}	Propagation Delay Time		5		200	400	ns
			10		90	180	
			15		65	130	
t_{THL}, t_{TLH}	Transition Time		5		100	200	ns
			10		50	100	
			15		40	80	
f_{CL}	Maximum Clock Input Frequency		5	3	6		MHz
			10	7	14		
			15	8.5	17		
t_W	Clock Input Width		5	160	80		ns
			10	70	35		
			15	50	25		
t_r, t_f	Clock Input Rise or Fall Time		5	Unlimited			µs
			10				
			15				
t_{setup}	Data Input Set-up Time		5	40	20		ns
			10	12	6		
			15	6	3		
t_H	Data Input Hold-time		5	140	70		ns
			10	80	40		
			15	60	30		
PRESET* OR RESET OPERATION							
t_{PLH}, t_{PHL}	Propagation Delay Time (reset or reset to $\overline{Q}$)		5		275	550	ns
			10		125	250	
			15		90	180	
t_W	Preset or Reset Pulse Width		5	160	80		ns
			10	70	35		
			15	50	25		
t_{rem}	Preset or Reset Removal Time		5	80	40		ns
			10	30	15		
			15	20	10		

- At PRESET ENABLE OR JAM inputs

Typical Output Low (sink) Current Characteristics.

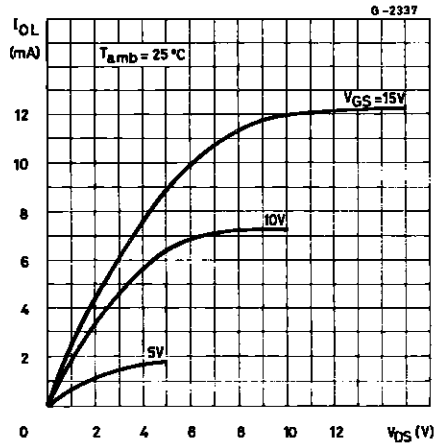

Typical Output high (source) Current Characteristics.

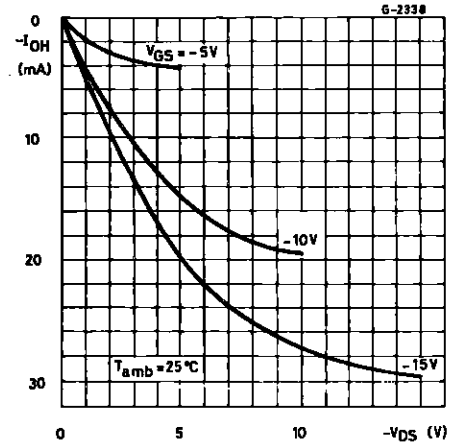

Minimum Output High (source) Current Characteristics.

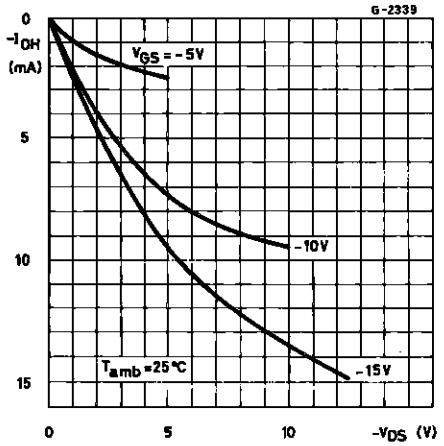

typical Output low (sink) Current Characteristics.

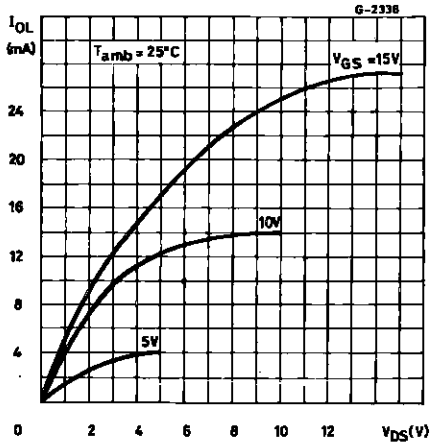

TYPICAL APPLICATIONS

External connections for divide by 10, 9, 8, 7, 6, 5, 4, 3, 2 operation.

DIVIDE BY 10	$\overline{Q}_5$	CONNECTED BACK TO "DATA"	NO EXTERNAL COMPONENTS REQUIRED
DIVIDE BY 8	$\overline{Q}_4$		
DIVIDE BY 6	$\overline{Q}_3$		
DIVIDE BY 4	$\overline{Q}_2$		
DIVIDE BY 2	$\overline{Q}_1$	NO CONNECTED	

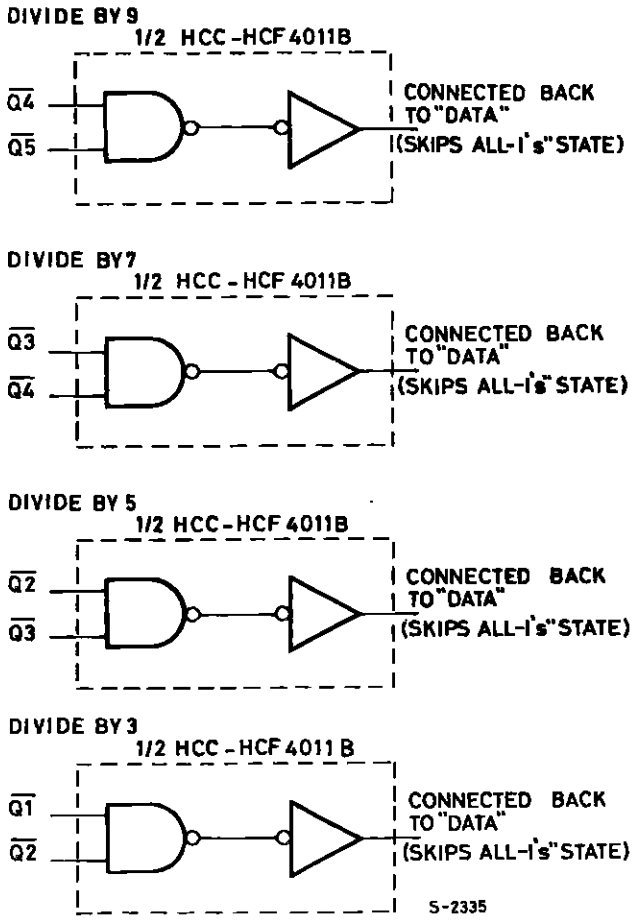

Plastic DIP16 (0.25) MECHANICAL DATA

DIM.	mm			inch		
	MIN.	TYP.	MAX.	MIN.	TYP.	MAX.
a1	0.51			0.020		
B	0.77		1.65	0.030		0.065
b		0.5			0.020	
b1		0.25			0.010	
D			20			0.787
E		8.5			0.335	
e		2.54			0.100	
e3		17.78			0.700	
F			7.1			0.280
I			5.1			0.201
L		3.3			0.130	
Z			1.27			0.050

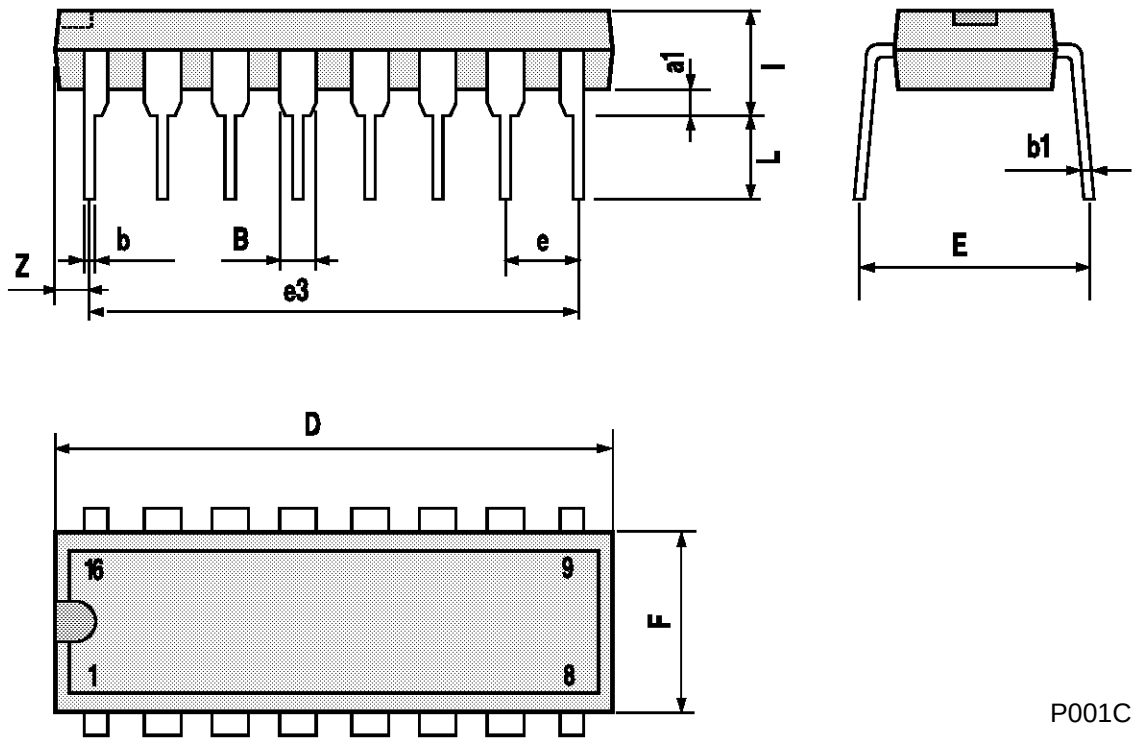

P001C

Ceramic DIP16/1 MECHANICAL DATA

DIM.	mm			inch		
	MIN.	TYP.	MAX.	MIN.	TYP.	MAX.
A			20			0.787
B			7			0.276
D		3.3			0.130	
E	0.38			0.015		
e3		17.78			0.700	
F	2.29		2.79	0.090		0.110
G	0.4		0.55	0.016		0.022
H	1.17		1.52	0.046		0.060
L	0.22		0.31	0.009		0.012
M	0.51		1.27	0.020		0.050
N			10.3			0.406
P	7.8		8.05	0.307		0.317
Q			5.08			0.200

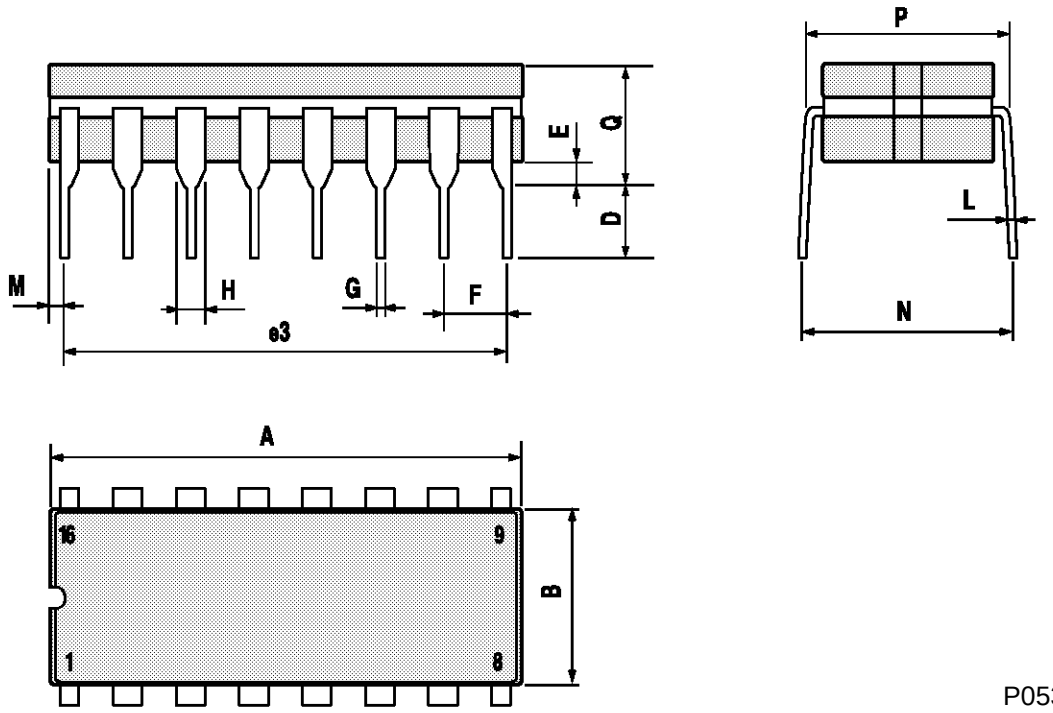

P053D

SO16 (Narrow) MECHANICAL DATA

DIM.	mm			inch		
	MIN.	TYP.	MAX.	MIN.	TYP.	MAX.
A			1.75			0.068
a1	0.1		0.2	0.004		0.007
a2			1.65			0.064
b	0.35		0.46	0.013		0.018
b1	0.19		0.25	0.007		0.010
C		0.5			0.019	
c1	45° (typ.)					
D	9.8		10	0.385		0.393
E	5.8		6.2	0.228		0.244
e		1.27			0.050	
e3		8.89			0.350	
F	3.8		4.0	0.149		0.157
G	4.6		5.3	0.181		0.208
L	0.5		1.27	0.019		0.050
M			0.62			0.024
S	8° (max.)					

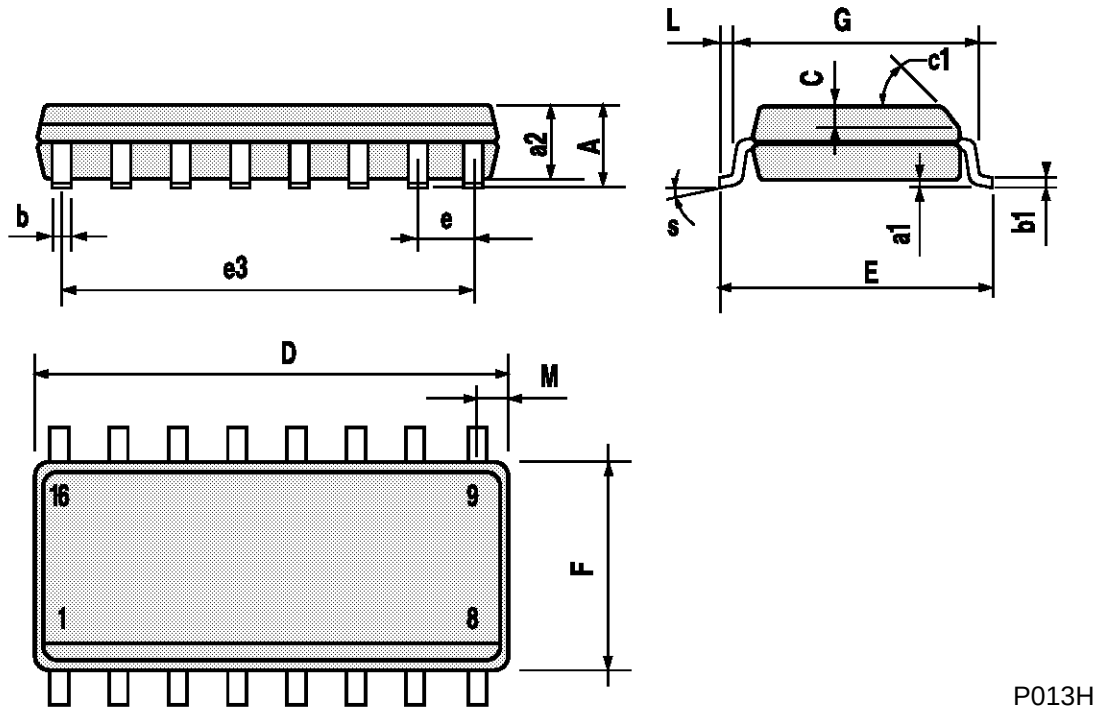

P013H

PLCC20 MECHANICAL DATA

DIM.	mm			inch		
	MIN.	TYP.	MAX.	MIN.	TYP.	MAX.
A	9.78		10.03	0.385		0.395
B	8.89		9.04	0.350		0.356
D	4.2		4.57	0.165		0.180
d1		2.54			0.100	
d2		0.56			0.022	
E	7.37		8.38	0.290		0.330
e		1.27			0.050	
e3		5.08			0.200	
F		0.38			0.015	
G			0.101			0.004
M		1.27			0.050	
M1		1.14			0.045	

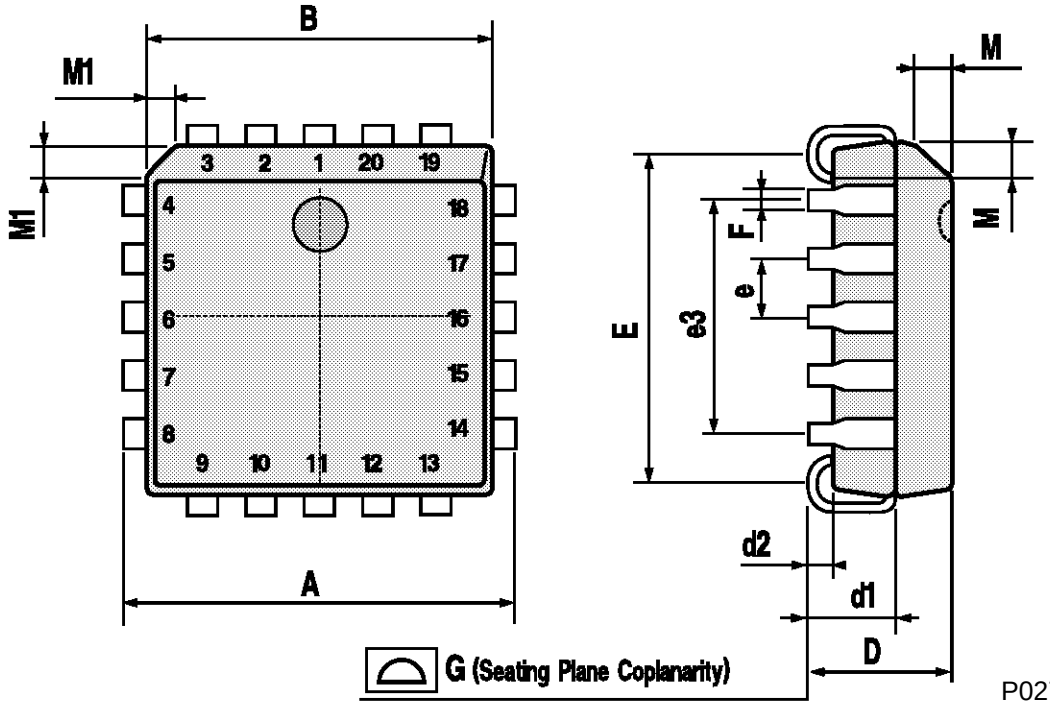

P027A

Information furnished is believed to be accurate and reliable. However, SGS-THOMSON Microelectronics assumes no responsability for the consequences of use of such information nor for any infringement of patents or other rights of third parties which may results from its use. No license is granted by implication or otherwise under any patent or patent rights of SGS-THOMSON Microelectronics. Specifications mentioned in this publication are subject to change without notice. This publication supersedes and replaces all information previously supplied.
SGS-THOMSON Microelectronics products are not authorized for use as critical components in life support devices or systems without express written approval of SGS-THOMSON Microelectonics.

© 1994 SGS-THOMSON Microelectronics - All Rights Reserved

SGS-THOMSON Microelectronics GROUP OF COMPANIES
Australia - Brazil - France - Germany - Hong Kong - Italy - Japan - Korea - Malaysia - Malta - Morocco - The Netherlands - Singapore - Spain - Sweden - Switzerland - Taiwan - Thailand - United Kingdom - U.S.A