TOSHIBA

New Product Guide

Low Power Consumption, Short-Lead Photointerrupter (Photo-IC Output Type)

TLP1031, TLP1033 and TLP1037

Low power consumption, short-lead photointerrupter (photo-IC output type)

TLP1031•TLP1033•TLP1037

Overview

The TLP1031, TLP1033 and TLP1037 digital-output photointerrupters combine a GaAs infrared LED which has a high optical output level with a high-sensitivity, high-gain Si photo-IC.

The photo-ICs can be used in 3.3-V systems, allowing a lower input voltage to be used. Compared with the use of existing products, lower power consumption can be achieved.

Use of a short-lead package enables devices to be automatically mounted on the printed circuit board. Lead cutting after soldering is eliminated, reducing the mounting costs.

TLP1031 TLP1033 TLP1037

Features

- Low-voltage drive: operating voltage V_{CC} = 2.7 V~5.5 V
- High-speed response: t_{PLH} = 15 µs (max), the fastest in the industry
- Can be used in high-temperature environments: T_{opr} = 95°C (max), the highest in the industry
- Threshold input current:
  TLP1031: I_{FLH} = 4 mA (max) @Ta = 25°C
  TLP1033, TLP1037: I_{FLH} = 3 mA (max) @Ta = 25°C
- Low-output when optical input signal is received (open-collector output)
- Short-lead package enables automatic mounting.
- Lead cutting not required after soldering
- Package with positioning pin used to avoid misalignment during mounting
- Photodetector side uses visible light-blocking resin to reduce the effects of visible light.

■ Detection

Device	Detection gap	Slit width	Appropriate printed circuit board thickness
TLP1031	3 mm	0.15 mm	Less than 16 mm
TLP1033	5 mm	0.5 mm	
TLP1037	5 mm	0.5 mm	

Maximum Ratings (Ta = 25°C)

	Rating	Symbol	Value	Unit
LED	Forward current	I_F	50	mA
LED	Forward current derating (Ta > 25°C)	ΔI_F/°C	–0.33	mA/°C
LED	Reverse voltage	V_R	5	V
Detector	Power supply voltage	V_{CC}	7	V
Detector	Output voltage	V_O	15	V
Detector	Low-level output current (Ta = T_{opr})	I_{OL}	8	mA
Operating temperature		T_{opr}	–30~95	°C
Storage temperature		T_{stg}	–40~100	°C
Soldering temperature (5s *Note)		T_{sol}	260	°C

Note: 1.5 mm below base of case

Electrical and Optical Characteristics (Unless otherwise specified: Ta = –30~95°C, V_{CC} = 2.7~5.5 V)

	Rating	Symbol	Test Conditions		Min	Typ.	Max	Unit
LED	Forward voltage	V_F	I_F=10 mA, Ta=25°C		1.00	1.15	1.30	V
LED	Reverse current	I_R	V_R=5 V, Ta=25°C		—	—	10	μA
LED	Peak emission wavelength	λ_P	I_F=15 mA, Ta=25°C		—	940	—	nm
Detector	Operating power supply voltage	V_{CC}	—		2.7	—	5.5	V
Detector	Low-level supply current	I_{CCL}	I_F=15 mA, Ta=25°C		—	—	1.7	mA
			I_F=15 mA		—	—	2.0	
Detector	High-level supply current	I_{CCH}	I_F=0		—	—	1.2	mA
Detector	Low-level output voltage	V_{OL}	I_{OL}=8 mA, I_F=15 mA, Ta=25°C		—	0.1	0.3	V
			I_{OL}=8 mA, I_F=15 mA		—	—	0.4	
Detector	High-level output current	I_{OH}	I_F=0, V_O=15 V		—	—	6.3	μA
Detector	Peak sensitivity wavelength	λ_P	Ta=25°C		—	900	—	nm
Coupled	Threshold input current (H → L)	I_{FHL}	Ta=25°C	**TLP1033, TLP1037**	—	—	3	mA
				TLP1031	—	—	4	
			V_{CC}=5.5 V	**TLP1033, TLP1037**	—	—	4	
				TLP1031	—	—	6.7	
Coupled	Hysteresis ratio	I_{FHL}/I_{FLH}	—		—	1.5	—	—
Coupled	Propagation delay time (L → H)	t_pLH	V_{CC}=3.3 V		—	—	15	μs
Coupled	Propagation delay time (H → L)	t_pHL	I_F=15 mA		—	—	9	
Coupled	Rise time	t_r	R_L=10 kΩ		—	0.5	—	
Coupled	Fall time	t_f	Ta=25°C		—	0.02	—	

Detection versus Position Characteristics (Ta = 25°C)

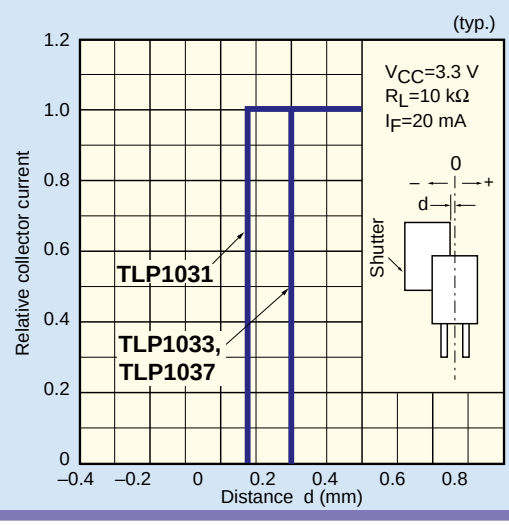

Detection area
TLP1031:
d=0±0.11 mm
TLP1033,TLP1037:
d=0±0.3 mm

Package Dimensions

Unit: mm ( ): Reference dimensions

● TLP1031

Weight: 0.4 g (typ.)

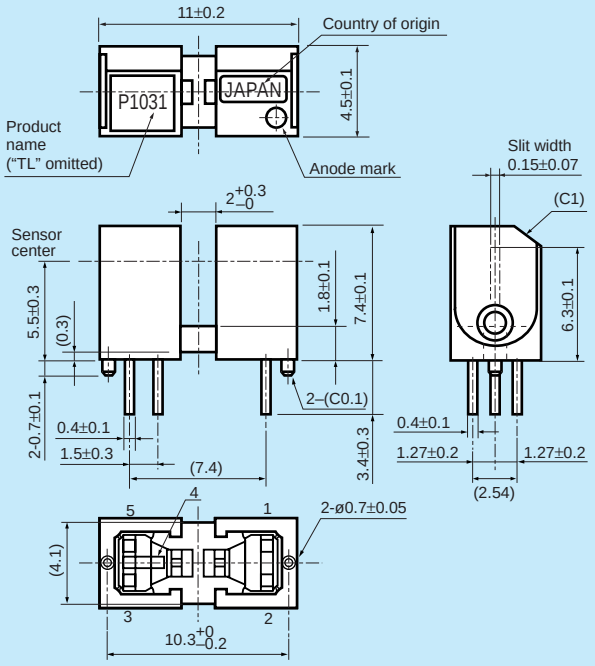

● TLP1033

Weight: 0.6 g (typ.)

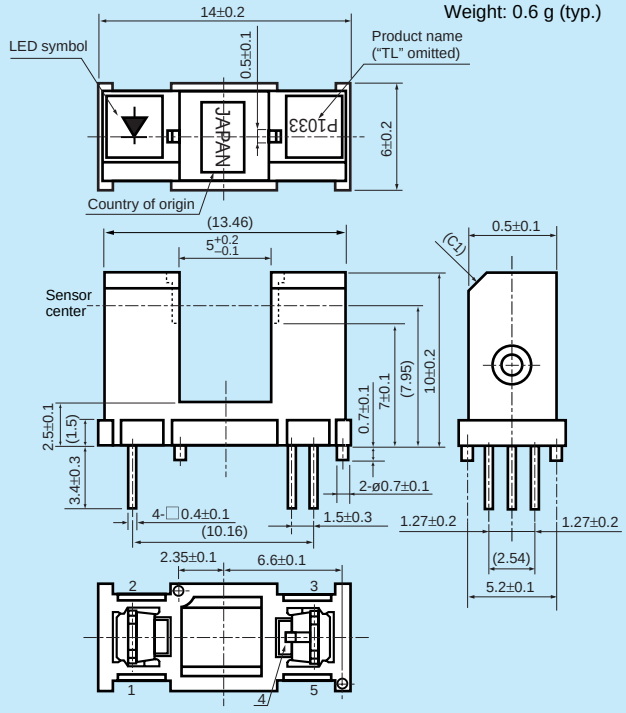

● TLP1037

Weight: 1 g (typ.)

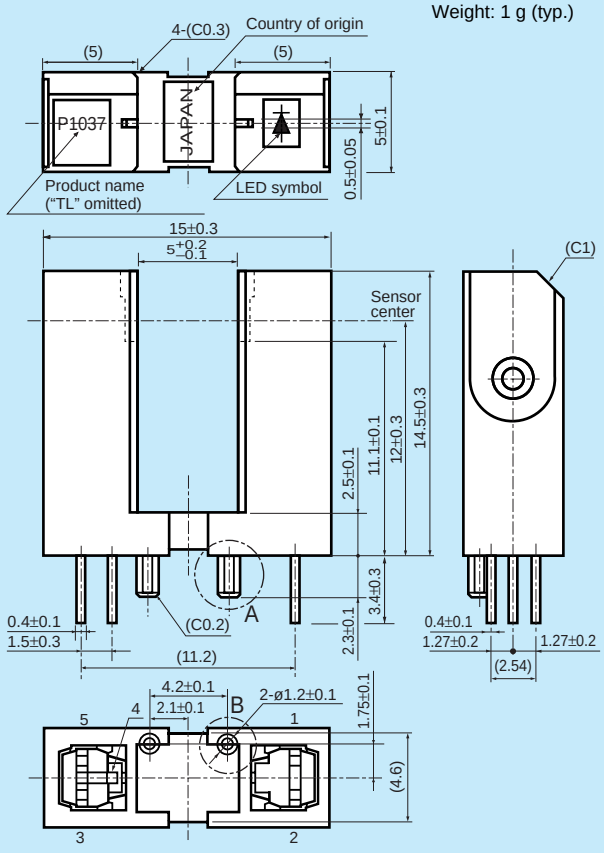

● Pin connection diagram (all devices)

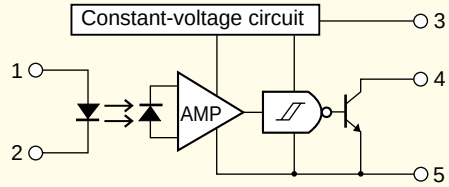

1. Anode
2. Cathode
3. V_{CC}
4. OUT
5. GND

Enlargement of section A

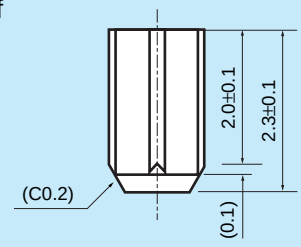

Enlargement of section B

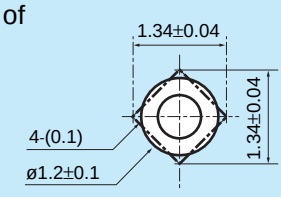

Application Examples

■ Page Printer

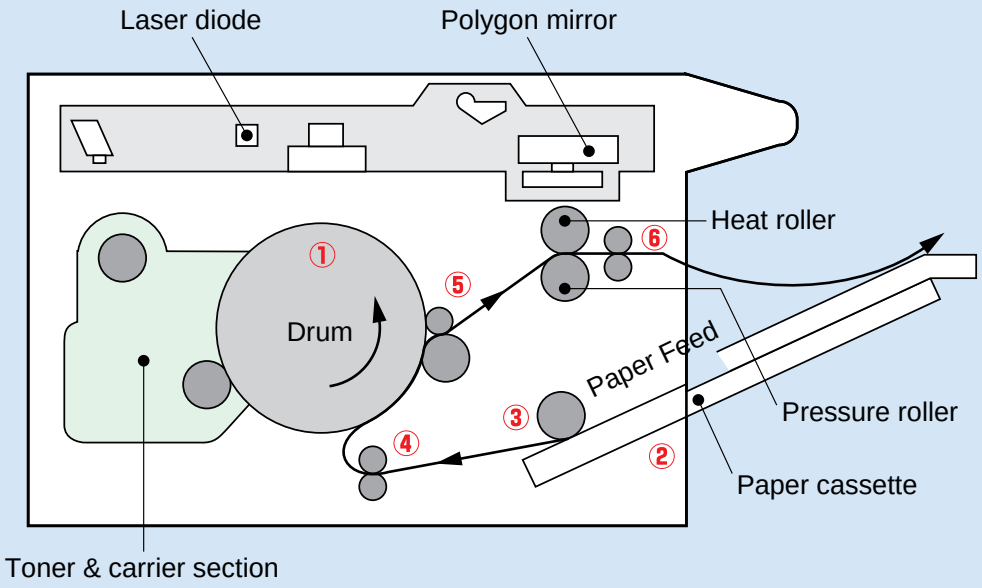

① Drum rotation detection
② No-paper detection
③,④ Paper feed detection
⑤ Paper separation detection
⑥ Paper ejection detection

■ Fax Machine

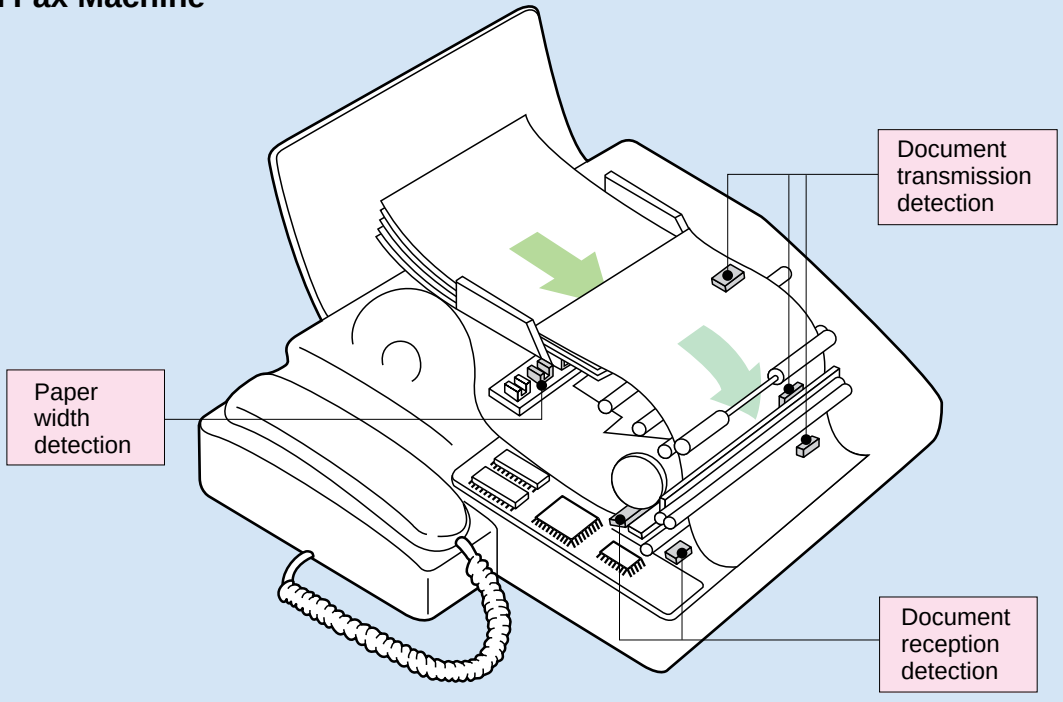

OVERSEAS SUBSIDIARIES AND AFFILIATES

990426(H)

Toshiba America Electronic Components, Inc.

Headquarters-Irvine, CA
9775 Toledo Way, Irvine, CA 92618, U.S.A.
Tel: (949)455-2000 Fax: (949)859-3963

Boulder, CO
3100 Arapahoe Avenue, Ste. 500,
Boulder, CO 80303, U.S.A.
Tel: (303)442-3801 Fax: (303)442-7216

Boynton Beach, FL(Orlando)
11924 W. Forest Hill Blvd., Ste. 22-337,
Boynton Beach, FL 33414, U.S.A.
Tel: (561)374-6193 Fax: (561)374-6194

Deerfield, IL(Chicago)
One Pkwy., North, Suite 500, Deerfield,
IL 60015-2547, U.S.A.
Tel: (847)945-1500 Fax: (847)945-1044

Duluth, GA(Atlanta)
3700 Crestwood Parkway, Ste. 460,
Duluth, GA 30096, U.S.A.
Tel: (770)931-3363 Fax: (770)931-7602

Edison, NJ
2035 Lincoln Hwy. Ste. #3000, Edison
NJ 08817, U.S.A.
Tel: (732)248-8070 Fax: (732)248-8030

Orange County, CA
2 Venture Plaza, #500 Irvine, CA 92618, U.S.A.
Tel: (949)453-0224 Fax: (949)453-0125

Portland, OR
1700 NW 167th Place, #240,
Beaverton, OR 97006, U.S.A.
Tel: (503)629-0818 Fax: (503)629-0827

Richardson, TX(Dallas)
777 East Campbell Rd., Suite 650, Richardson,
TX 75081, U.S.A.
Tel: (972)480-0470 Fax: (972)235-4114

San Jose Engineering Center, CA
1060 Rincon Circle, San Jose, CA 95131, U.S.A.
Tel: (408)526-2400 Fax:(408)526-2410

Wakefield, MA(Boston)
401 Edgewater Place, Suite #360, Wakefield,
MA 01880-6229, U.S.A.
Tel: (781)224-0074 Fax: (781)224-1095

Toshiba Electronics Europe GmbH

Düsseldorf Head Office
Hansaallee 181, D-40549 Düsseldorf
Germany
Tel: (0211)5296-0 Fax: (0211)5296-400

München Office
Büro München Hofmannstrasse 52,
D-81378, München, Germany
Tel: (089)748595-0 Fax: (089)748595-42

Toshiba Electronics France SARL
Immeuble Robert Schumann 3 Rue de Rome,
F-93561, Rosny-Sous-Bois, Cedex, France
Tel: (1)48-12-48-12 Fax: (1)48-94-51-15

Toshiba Electronics Italiana S.R.L.
Centro Direzionale Colleoni
Palazzo Perseo Ingr. 2-Piano 6,
Via Paracelso n.12,
1-20041 Agrate Brianza Milan, Italy
Tel: (039)68701 Fax:(039)6870205

Toshiba Electronics España, S.A.
Parque Empresarial San Fernando Edificio Europa,
1a Planta, ES-28831 Madrid, Spain
Tel: (91)660-6700 Fax:(91)660-6799

Toshiba Electronics(UK) Limited
Riverside Way, Camberley Surrey,
GU15 3YA, U.K.
Tel: (01276)69-4600 Fax: (01276)69-4800

Toshiba Electronics Scandinavia AB
Gustavslundsvägen 12, 2nd Floor
S-161 15 Bromma, Sweden
Tel: (08)704-0900 Fax: (08)80-8459

Toshiba Electronics Asia (Singapore) Pte. Ltd.

Singapore Head Office
438B Alexandra Road, #06-08/12 Alexandra
Technopark, Singapore 119968
Tel: (278)5252 Fax: (271)5155, (270)6056

Bangkok Office
135 Moo 5 Bangkadi Industrial Park, Tivanon Rd.,
Bangkadi Amphur Muang Pathumthani, Bangkok,
12000, Thailand
Tel: (02)501-1635 Fax: (02)501-1638

Toshiba Electronics Trading (Malaysia)Sdn. Bhd.

Kuala Lumpur Head Office
Suite W1203, Wisma Consplant, No.2,
Jalan SS 16/4, Subang Jaya, 47500 Petaling Jaya,
Selangor Darul Ehsan, Malaysia
Tel: (3)731-6311 Fax: (3)731-6307

Penang Office
Suite 13-1, 13th Floor, Menard Penang Garden,
42-A, Jalan Sultan Ahmad Shah,
100 50 Penang, Malaysia
Tel: 4-226-8523 Fax: 4-226-8515

Toshiba Electronics Philippines, Inc.

26th Floor, Citibank Tower, Valero Street, Makati,
Manila, Philippines
Tel: (02)750-5510 Fax: (02)750-5511

Toshiba Electronics Asia, Ltd.

Hong Kong Head Office
Level 11, Top Glory Insurance Building, Grand Century
Place, No.193, Prince Edward Road West,
Mong Kok, Kowloon, Hong Kong
Tel: 2375-6111 Fax: 2375-0969

Beijing Office
Rm 714, Beijing Fortune Building,
No.5 Dong San Huan Bei-Lu, Chao Yang District,
Beijing, 100004, China
Tel: (010)6590-8795 Fax: (010)6590-8791

Chengdu Office
Unit F, 18th Floor, New Times Plaza, 42 Wenwu Road,
Xinhua Avenue, Chengdu, 610017, China
Tel: (028)675-1773 Fax: (028)675-1065

Shenzhen Office
Rm 3010-3012, Office Tower Shun Hing Square,
Di Wang Commercial Centre, 333 ShenNan
East Road, Shenzhen, 518008, China
Tel: (0755)246-1582 Fax: (0755)246-1581

Toshiba Electronics Korea Corporation

Seoul Head Office
14/F, KEC B/D, 257-7 Yangjae-Dong,
Seocho-ku, Seoul, Korea
Tel: (02)589-4334 Fax: (02)589-4302

Kumi Office
6/F, Ssangyong Investment Securities B/D,
56 Songjung-Dong, Kumi City
Kyeongbuk, Korea
Tel: (82)546-456-7613 Fax: (82)546-456-7617

Toshiba Technology Development (Shanghai) Co., Ltd.

23F, Shanghai Senmao International Building, 101
Yin Cheng East Road, Pudong New Area, Shanghai,
200120, China
Tel: (021)6841-0666 Fax: (021)6841-5002

Tsurong Xiamen Xiangyu Trading Co., Ltd.

8N, Xiamen SEZ Bonded Goods Market Building,
Xiamen, Fujian, 361006, China
Tel: (0592)562-3798 Fax: (0592)562-3799

Toshiba Electronics Taiwan Corporation

Taipei Head Office
17F, Union Enterprise Plaza Bldg. 109
Min Sheng East Rd., Section 3, 0446 Taipei,
Taiwan R.O.C.
Tel: (02)514-9988 Fax: (02)514-7892

Kaohsiung Office
16F-A, Chung-Cheng Bldg., Chung-Cheng 3Rd.,
80027, Kaohsiung, Taiwan R.O.C.
Tel: (07)222-0826 Fax: (07)223-0046

The information contained herein is subject to change without notice.

The information contained herein is presented only as a guide for the applications of our products.
No responsibility is assumed by TOSHIBA for any infringements of patents or other rights of the third parties which may result from its use. No license is granted by implication or otherwise under any patent or patent rights of TOSHIBA or others.

TOSHIBA is continually working to improve the quality and the reliability of its products. Nevertheless, semiconductor devices in general can malfunction or fail due to their inherent electrical sensitivity and vulnerability to physical stress. It is the responsibility of the buyer, when utilizing TOSHIBA products, to observe standards of safety, and to avoid situations in which a malfunction or failure of a TOSHIBA product could cause loss of human life, bodily injury or damage to property. In developing your designs, please ensure that TOSHIBA products are used within specified operating ranges as set forth in the most recent products specifications. Also, please keep in mind the precautions and conditions set forth in the TOSHIBA Semiconductor Reliability Handbook.

In Touch with Tomorrow
TOSHIBA

TOSHIBA CORPORATION
Electronic Devices Sales & Marketing Group
1-1, Shibaura 1-chome, Minato-ku, Tokyo, 105-8001, Japan
Tel: (03)3457-3405 Fax: (03)5444-9431

Gallium arsenide (GaAs) is a substance used in some of the products described in this documents. GaAs dust and fumes are toxic. Do not break, cut or pulverize the products, or use chemicals to dissolve them. When disposing of the products, follow the appropriate regulations. Do not dispose of the products with other industrial waste or with domestic garbage.

©1999 TOSHIBA CORPORATION
Printed in Japan