TOSHIBA BIPOLAR LINEAR INTEGRATED CIRCUIT SILICON MONOLITHIC

TA1241AN

DEFLECTION PROCESSOR IC FOR TVs

Ideal for large-inch CRT, the TA1241AN is an IC for deflection correction and vertical / horizontal picture size adjustment, with a 24-pin plastic package.
The TA1241AN can control all kinds of picture adjustment functions through I^2C-bus communications.

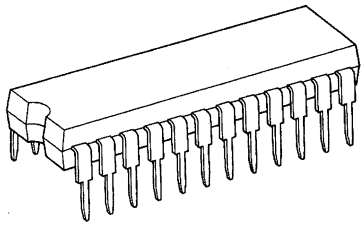

SDIP24-P-300-1.78

Weight: 1.22 g (Typ.)

FEATURES

BUS write mode

- Vertical amplitude adjustment
- Vertical position adjustment
- Vertical linearity correction
- Vertical S correction
- Vertical ∫ correction
- Vertical EHT correction
- Trapezium correction
- Horizontal amplitude correction
- Horizontal EHT correction
- Parabola correction
- Corner correction
- Center curve correction (SAW, PAR)

BUS read mode

- V-guard detection
- LVP detection
- V output detection
- E / W output detection

Pin output

- V centering (DAC)
- H centering (DAC)
- Dynamic focus (DAC)
- Analog blanking
- LVP detection

BLOCK DIAGRAM

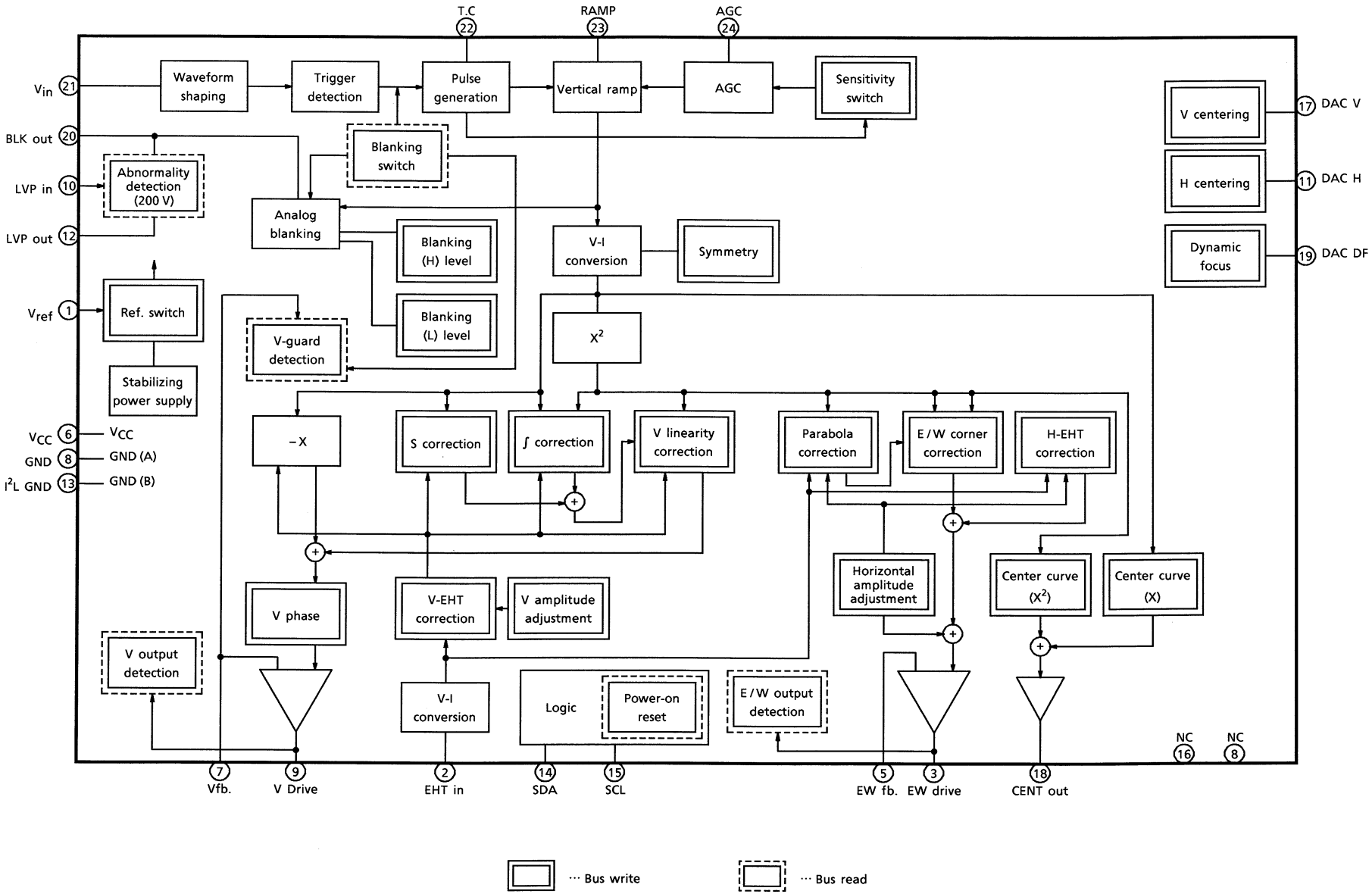

PIN CONNECTION

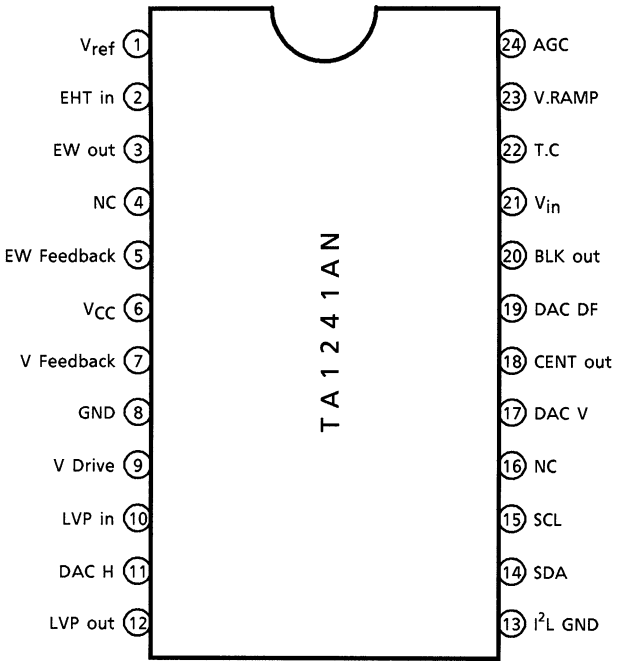

PIN FUNCTION

PIN No.	PIN NAME	FUNCTION	INTERFACE	INPUT / OUTPUT SIGNAL
1	V_{ref}	Bias voltage external input pin for the V and E / W blocks. BUS write mode controls the switching.	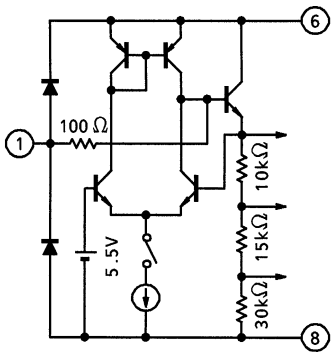	—
2	EHT in	EHT input pin.	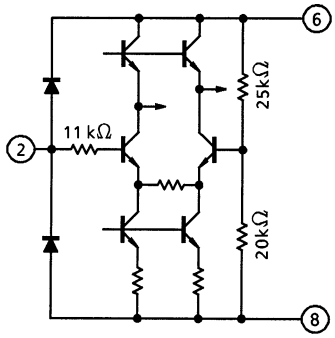	—
3	EW Drive	E / W drive output pin. Also performs E / W detection in BUS read mode.	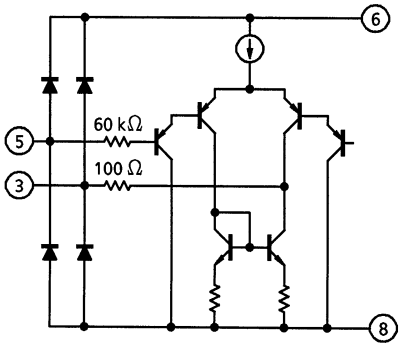	—
5	EW Feedback	E / W feedback pin.		
4	NC	—	—	—
6	V_{CC}	V_{CC} pin. Connect 9 V (Typ.).	—	—

PIN No.	PIN NAME	FUNCTION	INTERFACE	INPUT / OUTPUT SIGNAL
7	V Feedback	Vertical negative feedback input pin. When voltage on this pin equals or exceeds 6 V, the device outputs a blanking signal to pin 20 and sends discriminating data to BUS read.	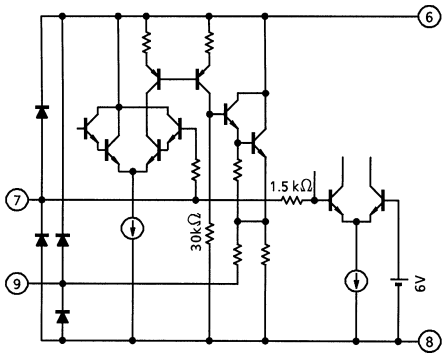	—
9	V Drive	Vertical signal output pin. Also performs vertical output detection in BUS read mode.		
8	GND	GND pin.	—	—
10	LVP in	Used to connect reference voltage to protect the deflection block from a low-voltage.	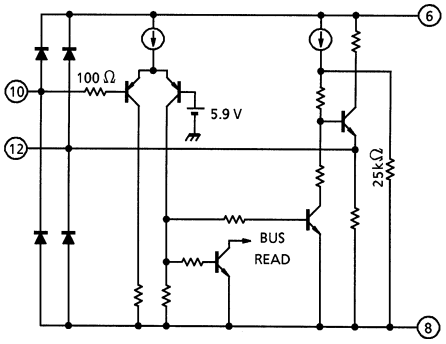	—
12	LVP out	Outputs abnormal power supply detection result. Also performs LVP detection in BUS read mode.		OK : DC0.7V NG : DC5.0V
11	DAC H	DAC output pin for horizontal centering.	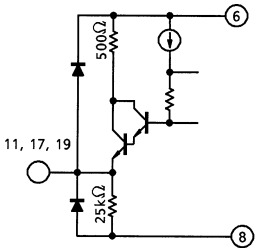	—
17	DAC V	DAC output pin for vertical centering.		—
19	DAC DF	DAC output pin for dynamic focus.		—
13	I^2L GND	GND pin for the I^2L block.	—	—
14	SDA	SDA pin for the I^2C BUS.	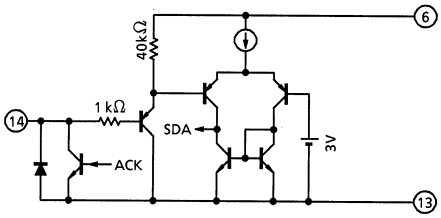	—

PIN No.	PIN NAME	FUNCTION	INTERFACE	INPUT / OUTPUT SIGNAL
15	SCL	SCL pin for the I^2C BUS.	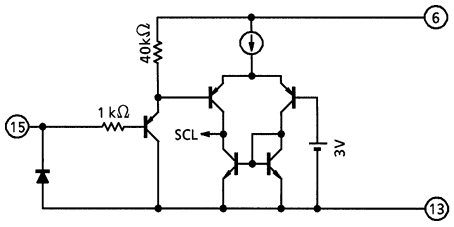	—
16	NC	—	—	—
18	CENT out	Outputs center curve correction waveform.	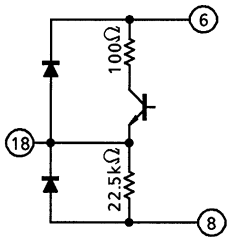	—
20	BLK out	Analog blanking output pin. Open collector output. In BUS write mode, outputs a vertical blanking signal for the vertical RAMP.	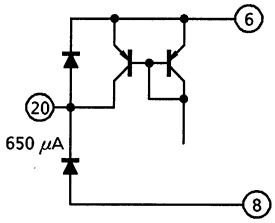	
21	V in	Inputs trigger pulse. Detects the falling edge of the input pulse and generates a trigger pulse to the next-stage circuit.	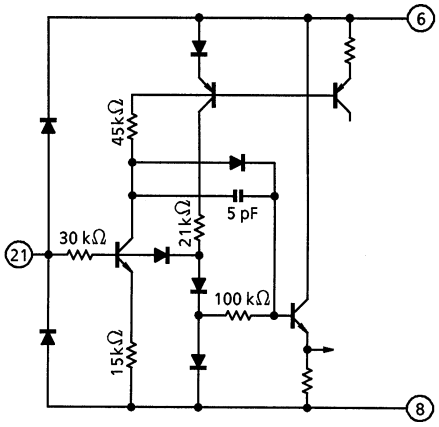	

PIN No.	PIN NAME	FUNCTION	INTERFACE	INPUT / OUTPUT SIGNAL
22	T.C	This pin connects a pulse-shaping filter.	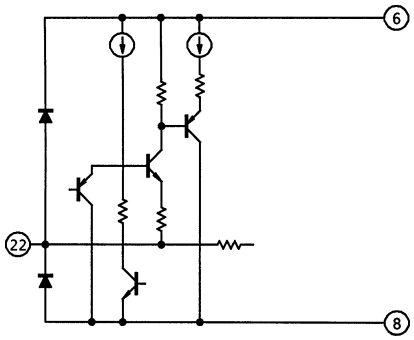	—
23	V RAMP	Used to connect a capacitor to generate a vertical RAMP signal.	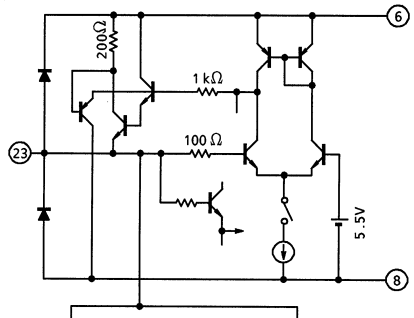	
24	AGC	Used to connect a filter to automatically adjust the vertical RAMP oscillation amplitude.	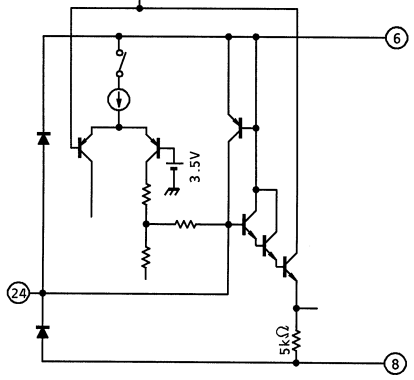	—

I²C BUS MAP

Write data map IC address : 10001100 (8CH)

FUNCTION	SUB ADDRESS MSB LSB	DATA MSB LSB	PRESET MSB LSB	RANGE
PICTURE HEIGHT	0 0 0 0 0 0 0 0	× O O O O O O O	0 1 0 0 0 0 0 0	−48~+48%
V-LINIARITY	0 0 0 0 0 0 0 1	× × × O O O O O	0 0 0 1 0 0 0 0	−13~+13%
V-S CORRECTION	0 0 0 0 0 0 1 0	× × O O O O O O	0 0 1 0 0 0 0 0	−24~+24%
V-SHIFT. AGC, REG	0 0 0 0 0 0 1 1	× v × A × O O ×	0 0 0 0 0 0 1 0	−570~+570 mV
v-COMPENSATION	0 0 0 0 0 1 0 0	× × × × × O O O	0 0 0 0 0 0 0 0	0~9%
PICTURE WIDTH	0 0 0 0 0 1 0 1	× × O O O O O O	0 0 1 0 0 0 0 0	1.7~6.5 V
E-W PARABORA	0 0 0 0 0 1 1 0	× × O O O O O O	0 0 0 0 0 0 0 0	0~4.4 V
E-W CORNER	0 0 0 0 0 1 1 1	× × × O O O O O	0 0 0 1 0 0 0 0	−3.2~+3.2%
TRAPEZIUM	0 0 0 0 1 0 0 0	× O O O O O O O	0 1 0 0 0 0 0 0	0~2.4 V
H-COMP, H-CENT DAC	0 0 0 0 1 0 0 1	× O O O × O O O (H-CENT DAC)	0 0 0 0 0 0 0 0	0~9%, 1~5 V
V-∫CORRECT, BLK-SW	0 0 0 0 1 0 1 0	× × B × O O O O	0 0 0 0 0 0 0 0	0~4%
V CENT DAC	0 0 0 0 1 0 1 1	× O O O O O O O	0 0 0 0 0 0 0 0	0.5~5 V
ANAROG BLK-VH	0 0 0 0 1 1 0 0	× × × O O O O O	0 0 0 1 0 0 0 0	−640~+640 mV
ANAROG BLK-VL	0 0 0 0 1 1 0 1	× × × O O O O O	0 0 0 1 0 0 0 0	−640~+640 mV
CENT PAR, SAW	0 0 0 0 1 1 1 0	× O O O × O O O	0 1 0 0 0 1 0 0	−4~+4 V, −2~+2 V
DYNAMIC FORCUS	0 0 0 0 1 1 1 1	× × O O O O O O	0 0 0 0 0 0 0 0	−0.5~5 V

Note: O : Used bit, × : Unused bit
A : AGC switching (DATA = 0…HIGH response, DATA = 1…LOW response)
V : Power supply switching
(DATA = 0…Stabilization power supply, DATA = 1…External power supply)
B : Blanking switch (DATA = 0…Enabled, DATA = 1…Disabled)
When the uppermost bit of the subaddress is high, auto-increment mode is set.

Read data map IC address 10001101 (8DH)

MSB LSB

FUNCTION / DATA	NON	NON	NON	LVP	V-GUAD	E-Wout	Vout	POW DISCRIMI-NATION
0	—	—	—	OFF	OFF	No signal	No signal	OFF
1	—	—	—	ON	ON	Signal	Signal	ON

DEFLECTION CORRECTION TABLE

FUNCTION	OUTPUT WAVEFORM	PICTURE CHANGE	VARIABLE RANGE
Vertical Amplitude Adjustment [PICTURE HEIGHT]		Typ. Large value 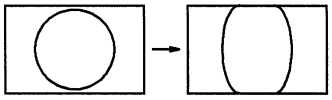 (Solid line at left) (Dotted line at left)	−48~+48%
Vertical Linearity Correction [V-LINEARITY]		Typ. Large value 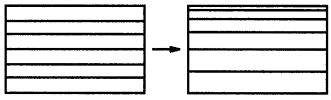 (Solid line at left) Lower stretching, upper compression	−13~+13%
Vertical S Correction [V-S CORRECTION]		Typ. Large value 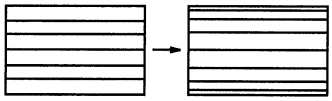 (Solid line at left) Upper and lower compression	−24~+24%
Vertical ∫ Correction [V-∫ CORRECTION]		Typ. Large value 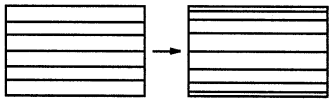 (Solid line at left) Upper and lower compression	0~4%
Vertical EHT Correction [V-COMPENSATION]		Typ. Large value 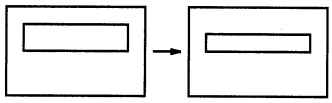 (Solid line at left) (Dotted line at left)	0~9%
Vertical Phase Correction [V-SHIFT]	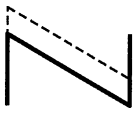	Typ. Large value 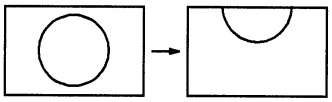 (Solid line at left) (Dotted line at left)	−800~+800 mV

FUNCTION	OUTPUT WAVEFORM	PICTURE CHANGE	VARIABLE RANGE
Parabola Amplitude Adjustment [E-W PARABOLA]		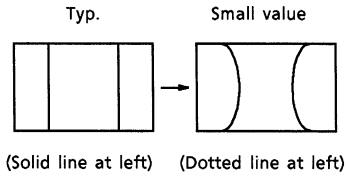	0~5.6 V
Corner Correction [E-W CORNER]		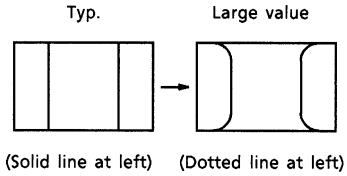	−3.2~+3.2 V
Horizontal EHT Correction [H-COMPENSATION]		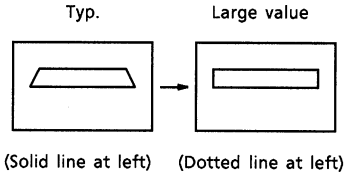	0~+9%
Horizontal Amplitude Adjustment [PICTURE WIDTH]		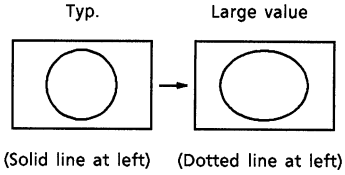	1.6~7.3 V
Parabola Symmetry Correction [TRAPEZIUM]		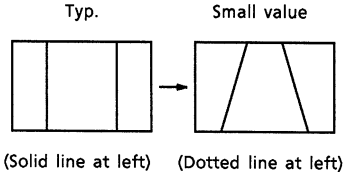	−9~+9%
Center Curve SAW Correction [CENT SAW]	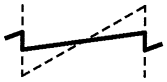	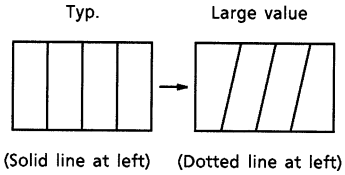	−2~+2 V
Center Curve Parabola Correction [CENT PAR]		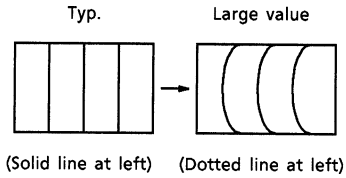	−1~+1 V

MAXIMUM RATINGS (Ta = 25°C)

CHARACTERISTICS	SIGNAL	RATING	UNIT
Power Supply Voltage	V_{CC}	12	V
Power Dissipation	P_D MAX	1250 (Note)	mW
Input Signal Voltage	e_{in}	9	V_{p-p}
Operating Temperature	T_{opr}	−20 to 65	°C
Storage Temperature	T_{stg}	−55 to 150	°C

Note: When using at temperatures higher than 25°C, decrease maximum power dissipation by 10 mW for every 1°C over 25°C.

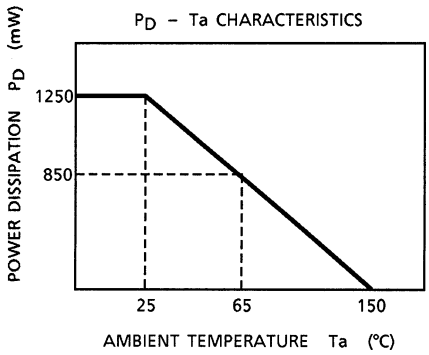

RECOMMENDED POWER SUPPLY VOLTAGE

CHARACTERISTICS	SYMBOL	MIN	TYP.	MAX	UNIT
Power Supply Voltage	V_{CC}	8.5	9.0	9.5	V

ELECTRICAL CHARACTERISTICS

DC ELECTRICAL CHARACTERISTICS (Test circuit 1)

PIN No.	PIN NAME	SYMBOL	UNIT	ELECTRICAL CHARACTERISTICS LIMITS MIN	TYP.	MAX	TEST METHOD (CONDITIONS V_{CC} = 9 V, Ta = 25±3°C) BUS DATA AND SWITCHING MODE [ ] ; SUBADDRESS, ( ) ; DATA	TEST METHOD
1	V_{ref}	V_1	V	6.0	6.3	6.6	No bus input	Measure the DC voltage of each pin.
2	EHT	V_2		5.7	6.2	6.7		
3	EW Drive	V_3		5.2	5.5	5.8		
5	EW Feedback	V_5		8.7	9.0	9.3		
7	V Feedback	V_7		2.0	2.4	2.8		
9	V Drive	V_9		0.5	0.8	3.4		
10	LVP in	V_{10}		8.85	8.95	9.05		
11	DAC H	V_{11}		0.5	1.3	2.1		
12	LVP out	V_{12}		0.0	0.8	1.6		
14	SDA	V_{14}		4.8	5.1	5.4		
15	SCL	V_{15}		4.8	5.1	5.4		
17	DAC V	V_{17}		0.0	0.8	1.6		
18	CENT out	V_{18}		5.5	6.0	6.5		
19	DAC DF	V_{19}		0.0	0.8	1.6		
20	BLK out	V_{20}		0.0	0.0	1.0		
21	V_{in}	V_{21}		—	0.0	—		
22	T.C	V_{22}		3.7	4.0	4.3		
23	V.RAMP	V_{23}		2.2	2.5	2.8		
24	AGC	V_{24}		—	0.0	—		
Power Supply Current (V_{CC} = 9 V)		I_{CC}	mA	31.0	47.0	63.0	No bus input	Open openland, connect an ammeter between TP4A and TP4B, and measure the sink current.

AC ELECTRICAL CHARACTERISTICS (Test circuit 2)

No.	CHARACTERISTIC	SYMBOL	UNIT	ELECTRICAL CHARACTERISTICS LIMITS MIN	TYP.	MAX	TEST METHOD (CONDITIONS V_{CC} = 9 V, Ta = 25±3°C) BUS DATA AND SWITCHING MODE [ ] ; SUBADDRESS, ( ) ; DATA	TEST METHOD
1	Vertical Trigger Input Shaping Voltage	V_{TH21}	V	0.7	1.0	1.4	All PRESET values, all SW-A	(1) TP21 input : The following symbols (trigger pulse) 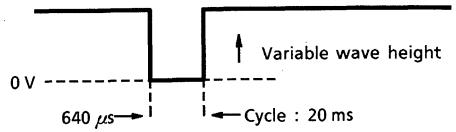 (2) Change the wave height of the trigger pulse on TP21. Then read the wave height of the trigger pulse when a timing pulse is output to TP22.
2	Pulse Generator Circuit Clamping Voltage	V_{H22}	V	3.8	4.0	4.2	All PRESET values, all SW-A	(1) TP21 input : The above trigger pulse Wave height = 3 V (2) Observe the TP22 and TP23 waveforms with an oscilloscope. Measure the following V_{H22} voltage: 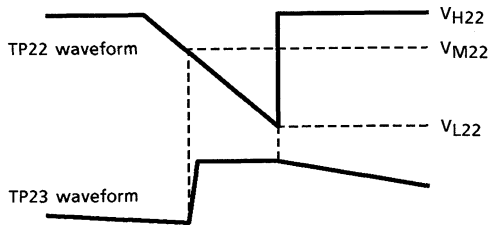
3	Pulse Generator Circuit Shaping Voltage 1	V_{M22}	V	2.8	3.0	3.2	All PRESET values, all SW-A	Measure V_{M22} as above.
4	Pulse Generator Circuit Shaping Voltage 2	V_{L22}	V	0.9	1.0	1.1	All PRESET values, all SW-A	Measure V_{L22} as above.
5	Vertical Ramp Amplitude	V_{P23}	V_{p-p}	1.9	2.0	2.1	All PRESET values, all SW-A	(1) TP21 input : Same as 2 above (trigger pulse). (2) Measure the TP23 waveform (vertical ramp) amplitude.

Note: Unless otherwise specified in the bus data and SW mode column, use PRESET values and W-A.

No.	CHARACTERISTIC	SYMBOL	UNIT	ELECTRICAL CHARACTERISTICS LIMITS MIN	TYP.	MAX	TEST METHOD (CONDITIONS V_{CC} = 9 V, Ta = 25±3°C) BUS DATA AND SWITCHING MODE [ ] ; SUBADDRESS, ( ) ; DATA	TEST METHOD
6	Vertical AMP Amplification	G_V	dB	20	23	26	All PRESET values, all SW_7-B	(1) No TP21 input (2) V_{DC} input : DC voltage is variable (0 to 6 V) (3) Measure the TP9 voltage change in relation to the change in the TP7 voltage and calculate the following G_V. 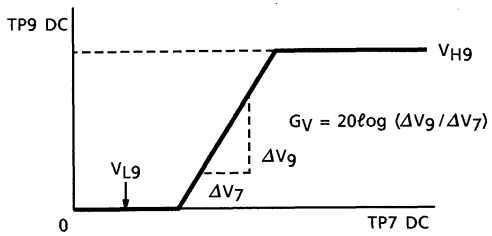
7	Vertical AMP Maximum Output Voltage	V_{H9}	V	1.80	2.60	3.40	All PRESET values, SW_7-B	Measure V_{H9} as above.
8	Vertical AMP Minimum Output Voltage	V_{L9}	V	0	0	0.3	All PRESET values, SW_7-B	Measure V_{L9} as above.
9	Vertical AMP Maximum Output Current	I_{max9}	mA	18.0	25.0	32.0	All PRESET values, SW_7-B	(1) Set V_{DC} to 6V as above. (2) Connect an ammeter between TP9 and GND and measure the current.
10	Vertical NF Saw Wave Amplitude	V_{P7}	V_{p-p}	1.40	1.60	1.80	All PRESET values, all SW-A	(1) TP21 inpu : Same as 2 above (trigger pulse). (2) Measure the TP7 vertical saw wave amplitude.
11	Vertical Amplitude Variable Range	V_{PH}	%	±45.0	±48.0	±51.0	[00] (00) (7F), all SW-A	(1) TP21 input : Same as 2 above (trigger pulse). (2) Measure the TP7 amplitude V_{P7} (00) when set the subaddress [00] to (00). (3) Next, measure the TP7 amplitude V_{P7} (7F) when set the subaddress [00] to (7F). $V_{PH} = \pm\frac{V_{P7}(7F) - V_{P7}(00)}{V_{P7}(7F) + V_{P7}(00)} \times 100(\%)$

Note: Unless otherwise specified in the bus data and SW mode column, use PRESET values and SW-A.

No.	CHARACTERISTIC	SYMBOL	UNIT	ELECTRICAL CHARACTERISTICS LIMITS MIN	TYP.	MAX	TEST METHOD (CONDITIONS V_{CC} = 9 V, Ta = 25±3°C) BUS DATA AND SWITCHING MODE [ ] ; SUBADDRESS, ( ) ; DATA	TEST METHOD
12	Vertical Linearity Maximum Correction	V_L	%	±10.0	±12.5	±15.0	[08] adjustment, all SW-A [01] (00) (10) (1F)	(1) Set the data of subaddress [06] to (3F). Set the data of subaddress [05] to (3F). Change the subaddress [08] data so that the TP5 parabola waveform is symmetrical. (2) Set the data of subaddress [06] to (00). Set the data of subaddress [05] to (20). (3) When set the data of subaddress [01] to (10), measure the TP7 waveform V_1 (10) and V_2 (10) (4) Likewise, when set the data of subaddress [01] to (00) and (1F), measure V_1 (00), V_2 (00), V_1 (1F), and V_2 (1F). 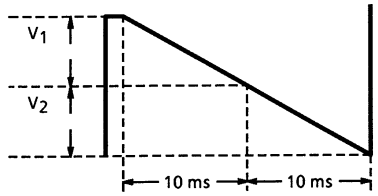 $V_L = \pm \frac{V_1(00) - V_1(1F) + V_2(1F) - V_2(00)}{2 \times [V_1(10) + V_2(10)]} \times 100$

Note: Unless otherwise specified in the bus data and SW mode column, use PRESET values and SW-A.

No.	CHARACTERISTIC	SYMBOL	UNIT	ELECTRICAL CHARACTERISTICS LIMITS MIN	TYP.	MAX	TEST METHOD (CONDITIONS V_{CC} = 9 V, Ta = 25±3°C) BUS DATA AND SWITCHING MODE [ ] ; SUBADDRESS, ( ) ; DATA	TEST METHOD
13	Vertical S Maximum Correction	V_S	%	±20.0	±24.0	±28.0	[08] adjustment, all SW-A [02] (00) (3F)	(1) Same as 12 above. (2) Measure the amplitude V_{S7} (00) of TP7 when set the data of subaddress [02] to (00). (3) Measure the amplitude V_{S7} (3F) of TP7 when set the data of subaddress [02] to (3F). 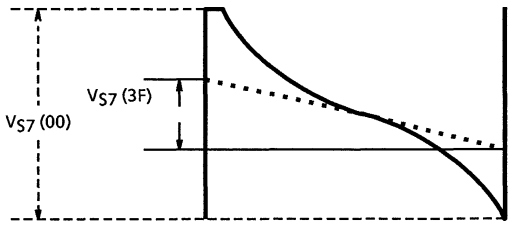 $V_S = \pm \frac{V_{S7}(00) - V_{S7}(3F)}{V_{S7}(00) + V_{S7}(3F)} \times 100\%$
14	Vertical ∫ Maximum Correction	$V_{\int}$	%	3.0	5.0	7.0	[08] adjustment, all SW-A [0A] (00) (0F)	(1) Same as 13 above. (2) Measure the amplitude $V_{\int 7}$ (00) of TP7 when set the data of subaddress [0A] to (00). (3) Measure the amplitude $V_{\int 7}$ (0F) of TP7 when set the data of subaddress [0A] to (0F). 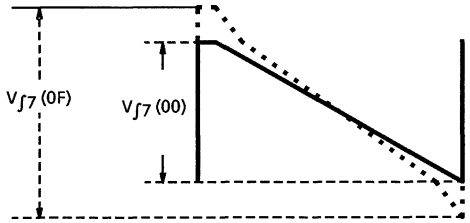 $V_{\int} = \pm \frac{V_{\int 7}(0F) - V_{\int 7}(00)}{V_{\int 7}(00)} \times 100\%$

Note: Unless otherwise specified in the bus data and SW mode column, use PRESET values and SW-A.

No.	CHARACTERISTIC	SYMBOL	UNIT	ELECTRICAL CHARACTERISTICS LIMITS MIN	TYP.	MAX	TEST METHOD (CONDITIONS V_{CC} = 9 V, Ta = 25±3°C) BUS DATA AND SWITCHING MODE [ ] ; SUBADDRESS, ( ) ; DATA	TEST METHOD
15	Vertical NF Center Voltage	V_C	V	3.8	4.0	4.2	[08] adjustment, all SW-A	(1) Same as 12 above. (2) Observe the TP7 waveform and measure the V_C shown below. 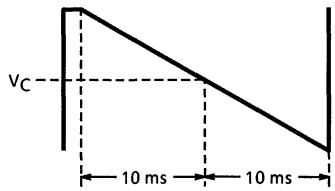
16	Vertical NF DC Change	V_{DC}	mV	±480	±560	±640	[08] adjustment, all SW-A [03] (00) (06)	(1) Same as 15 above. (2) Measure the vertical NF center voltage V_C (00) when set the data of subaddress [03] to (00). (3) Measure the vertical NF center voltage V_C (06) when set the data of subaddress [03] to (06). $V_{DC} = \pm \frac{V_C(06) - V_C(00)}{2} (mV)$
17	Vertical NF EHT Correction	V_{EHT}	%	8	9	10	[08] adjustment, SW_2-B [04] (00) (07)	(1) Same as 12 above. (2) V_{DC} input : DC voltage=0V (3) Observe TP7 waveform. (4) Measure the amplitude V_{EHT} (00) of TP7 when set the data of subaddress [04] to (00). (5) Measure the amplitude V_{EHT} (07) of TP7 when set the data of subaddress [04] to (07). $V_{EHT} = \frac{V_{EHT}(00) - V_{EHT}(07)}{V_{EHT}(00)} \times 100 (\%)$

Note: Unless otherwise specified in the bus data and SW mode column, use PRESET values and SW-A.

No.	CHARACTERISTIC	SYMBOL	UNIT	ELECTRICAL CHARACTERISTICS LIMITS MIN	TYP.	MAX	TEST METHOD (CONDITIONS V_{CC} = 9 V, Ta = 25±3°C) BUS DATA AND SWITCHING MODE [ ] ; SUBADDRESS, ( ) ; DATA	TEST METHOD
18	EHT Input D Range 1	V_{H2}	V	5.7	6.2	6.7	[08] adjustment, SW_2-B [04] (07)	(1) Same as 17 above. (2) Change the V_{DC} voltage from 1V to 7V. (3) Measure the change in the TP7 voltage at this time and measure the TP2 voltage V_{H2}. 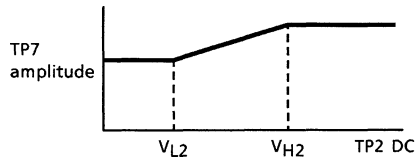
19	EHT Input D Range 2	V_{L2}	V	1.3	1.8	2.3	[08] adjustment, SW_2-B [04] (07)	Measure the TP2 voltage V_{L2} as above.
20	E / W NF Maximum DC Value	V_{H5}	V	5.5	6.2	6.9	[08] adjustment, SW-A [05] (00)	(1) Same as 12 above. (2) Measure the TP5 voltage.
21	E / W NF Minimum DC Value	V_{L5}	V	1.5	1.7	1.9	[08] adjustment, all SW-A [05] (3F)	(1) Same as 12 above. (2) Measure the TP5 voltage.
22	E / W NF Maximum Parabola Value	V_{PB}	V_{p-p}	3.0	3.9	4.8	[08] adjustment, SW_2-B [05] (3F) [06] (3F)	(1) V_{DC} input : 7V. (2) Measure the TP5 parabola amplitude. 

Note: Unless otherwise specified in the bus data and SW mode column, use PRESET values and SW-A.

No.	CHARACTERISTIC	SYMBOL	UNIT	ELECTRICAL CHARACTERISTICS LIMITS MIN	TYP.	MAX	TEST METHOD (CONDITIONS V_{CC} = 9 V, Ta = 25±3°C) BUS DATA AND SWITCHING MODE [ ] ; SUBADDRESS, ( ) ; DATA	TEST METHOD
23	E / W NF Corner Correction 1	V_{CR1}	V_{p-p}	1.80	2.50	3.20	[08] adjustment, SW_2-B [05] (3F) [06] (3F) [07] (10) (1F)	(1) V_{DC} input : 7 V (2) Observe the TP5 parabola amplitude. (3) Measure the amplitude V_{CR1} (10) when set the data of subaddress [07] to (10). (4) Measure the amplitude V_{CR1} (1F) when set the data of subaddress [07] to (1F). 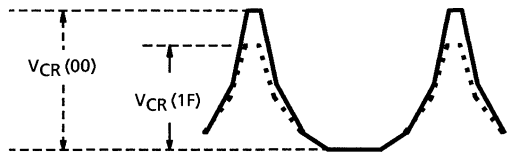 $V_{CR1} = V_{CR1}(10) - V_{CR1}(1F)$
23'	E / W NF Corner Correction 2	V_{CR2}	V_{p-p}	2.30	3.20	4.10	[08] adjustment, SW_2-B [05] (3F) [06] (20) [07] (00) (1F)	(1) V_{DC} input : 7 V (2) Measure the TP5 parabola amplitude. (3) Measure the amplitude V_{CR2} (00) when set the data of subaddress [07] to (00). (4) Measure the amplitude V_{CR2} (1F) when set the data of subaddress [07] to (1F). $V_{CR2} = V_{CR2}(00) - V_{CR2}(1F)$
24	Parabola Symmetry Correction Change	V_{TR}	%	±11.0	±13.0	±15.0	[08] (00) (7F), all SWA	(1) Measure the following as in 15 above. (2) Measure the TP7 center voltage V_C (00) when set the data of subaddress [08] to (00). (3) Measure the voltage V_C (7F) when set the data of subaddress [07] to (7F). $V_{TR} = \pm \frac{V_C(00) - V_C(7F)}{2 \times V_{P7}} \times 100 (\%)$ V_{P7} is the value measured in 10 above.

Note: Unless otherwise specified in the bus data and SW mode column, use PRESET values and SW-A.

No.	CHARACTERISTIC	SYMBOL	UNIT	ELECTRICAL CHARACTERISTICS LIMITS MIN	TYP.	MAX	TEST METHOD (CONDITIONS V_{CC} = 9 V, Ta = 25±3°C) BUS DATA AND SWITCHING MODE [ ] ; SUBADDRESS, ( ) ; DATA	TEST METHOD
25	E / W Parabola EHT Correction	V_{EH1}	%	2.0	3.3	4.5	[08] adjustment, SW_2-B [05] (3F) [06] (3F)	(1) V_{DC} input : DC voltage is variable (2) Measure the TP5 parabola amplitude V_{EH} (7) when DC = 7 V. (3) Likewise, measure the amplitude V_{EH} (1) when DC = 1 V. $V_{EH1} = \frac{V_{EH}(7) - V_{EH}(1)}{V_{EH}(7)} \times 100(\%)$
26	E / W DC EHT Correction	V_{EH2}	V	0.6	1.0	1.4	[08] adjustment, SW_2-B [05] (3F) [06] (3F) [09] (00) (07)	(1) V_{DC} input : DC voltage = 1 V (2) Measure the TP5 parabola phase center voltage V_{PC} (00) when set the data of subaddress [09] to (00). (3) Likewise, measure the voltage V_{PC} (07) when set the data of subaddress [09] to (07). 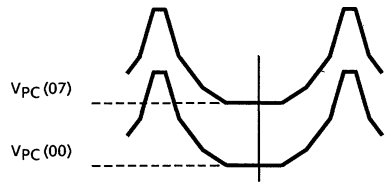 $V_{EH2} = V_{PC}$ (07) − V_{PC} (00) (V)
27	E / W Amp Maximum Output Current	I_{max3}	mA	0.14	0.20	0.27	All PRESET values, all SW-A	(1) Connect an ammeter between TP3 and GND. (2) Read the current.
28	AGC Operating Current 1	I_{AGC0}	μA	250	330	410	All PRESET values, SW_{24}-B	(1) TP21 input : Same as 2 above (trigger pulse). (2) Monitor the TP24 waveform. Measure the V_x below. 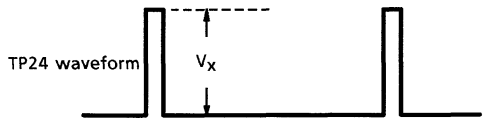 $I_{AGC0} = V_x \div 200$ (μA) (I_{AGC1})

Note: Unless otherwise specified in the bus data and SW mode column, use PRESET values and SW-A.

No.	CHARACTERISTIC	SYMBOL	UNIT	ELECTRICAL CHARACTERISTICS LIMITS MIN	TYP.	MAX	TEST METHOD (CONDITIONS V_{CC} = 9 V, Ta = 25±3°C) BUS DATA AND SWITCHING MODE [ ] ; SUBADDRESS, ( ) ; DATA	TEST METHOD
29	AGC Operating Current 2	I_{AGC1}	μA	60	83	105	[03] (12) SW_{24}-B	Calculate, as above, I_{AGC1} when set the data of subaddress [03] to (12).
30	Analog Blanking Output Current	I_{B20}	mA	0.400	0.650	0.800	All PRESET values, SW_7-B	(1) V_{DC} input : DC voltage = 5.5 V (2) Connect an ammeter between TP20 and GND and measure the current.
31	Upper Blanking Level	V_{H20}	V	5.25	5.50	5.75	All PRESET values, SW_7-B	(1) Same as 30 above. (2) V_{DC} input : DC voltage = variable (4.0 to 5.5 V) (3) Measure the V_{DC} input voltage V_{H20} when the output current reaches half the output current measured above.
32	Upper Blanking Change	V_{HC20}	mV	±485	±570	±655	[0C] (00) (1F) SW_7-B	Measure V_{H20} (00) and V_{H20} (1F) when set the data of subaddress [0C] to (00) and (1F) respectively. $V_{HC20} = \pm[V_{H20}(1F) - V_{H20}(00)] / 2$ (mV)
33	Lower Blanking Level	V_{L20}	V	3.30	3.50	3.70	All PRESET values, SW_7-B	(1) Same as 30 above. (2) V_{DC} input : DC voltage = variable (2.5 to 4.0 V) (3) Measure the V_{DC} input voltage V_{L20} when the output current reaches half the output current of 30 above.
34	Lower Blanking Change	V_{LC20}	mV	±485	±570	±655	[0D] (00) (1F) SW_7-B	Measure V_{L20} (00) and V_{L20} (1F) when set the data of subaddress [0D] to (00) and (1F) respectively. $V_{LC20} = \pm[V_{L20}(1F) - V_{L20}(00)] / 2$ (mV)
35	Center Curve Saw Positive Correction Maximum Amplitude	V_{CSF}	V_{p-p}	3.2	3.6	4.0	[08] adjustment, all SW-A [0E] (47)	(1) Same as 12 above. (2) Measure the TP18 output amplitude when set the data of subaddress [0E] to (47). 

Note: Unless otherwise specified in the bus data and SW mode column, use PRESET values and SW-A.

No.	CHARACTERISTIC	SYMBOL	UNIT	ELECTRICAL CHARACTERISTICS LIMITS MIN	TYP.	MAX	TEST METHOD (CONDITIONS V_{CC} = 9 V, Ta = 25±3°C) BUS DATA AND SWITCHING MODE [ ] ; SUBADDRESS, ( ) ; DATA	TEST METHOD
36	Center Curve Saw Negative Correction Maximum Amplitude	V_{CSR}	V_{p-p}	3.2	3.6	4.0	[08] adjustment, all SW-A [0E] (40)	As above, measure the TP18 output amplitude when set the data of subaddress [0E] to (40). 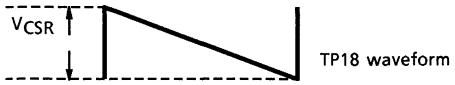
37	Center Curve Parabola Positive Correction Maximum Amplitude	V_{CPF}	V_{p-p}	1.2	1.8	2.4	[08] adjustment, all SW-A [0E] (74)	(1) Same as 12 above. (2) Measure the TP18 output amplitude when set the data of subaddress [0E] to (74). 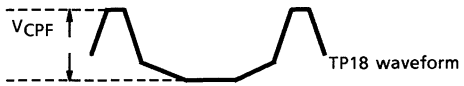
38	Center Curve Parabola Negative Correction Maximum Amplitude	V_{CPR}	V_{p-p}	1.2	1.8	2.4	[08] adjustment, all SW-A [0E] (04)	As above, measure the TP18 output amplitude when set the data of subaddress [0E] to (04). 
39	Horizontal Centering Maximum Output Voltage	V_{H11}	V	4.8	5.0	5.2	[09] (40), all SW-A	Measure the TP11 voltage V_{H11} when set the data of subaddress [09] to (70).
40	Horizontal Centering Minimum Output Voltage	V_{L11}	V	0.5	1.3	2.1	All PRESET values, all SW-A	Measure the TP11 voltage V_{L11} when set the data of subaddress [09] to (00).
41	Vertical Centering Maximum Output Voltage	V_{H17}	V	4.8	5.0	5.2	[0B] (4F), all SW-A	Measure the TP17 voltage V_{H17} when set the data of subaddress [0B] to (7F).
42	Vertical Centering Minimum Output Voltage	V_{L17}	V	0.0	5.0	1.6	All PRESET values, all SW-A	Measure the TP17 voltage V_{L17} when set the data of subaddress [0B] to (00).
43	Dynamic Focus Correction Maximum Output Voltage	V_{H19}	V	4.8	5.0	5.2	[0F] (3F), all SW-A	Measure the TP19 voltage V_{H19} when set the data of subaddress [0F] to (3F).

Note: Unless otherwise specified in the bus data and SW mode column, use PRESET values and SW-A.

No.	CHARACTERISTIC	SYMBOL	UNIT	ELECTRICAL CHARACTERISTICS LIMITS MIN	TYP.	MAX	TEST METHOD (CONDITIONS V_{CC} = 9 V, Ta = 25±3°C) BUS DATA AND SWITCHING MODE [ ] ; SUBADDRESS, ( ) ; DATA	TEST METHOD
44	Dynamic Focus Correction Minimum Output Voltage	V_{L19}	V	0.0	0.8	1.6	All PRESET values, all SW-A	Measure the TP19 voltage V_{L19} when set the data of subaddress [0F] to (00).
45	LVP Input Discrimination Voltage	V_{LVP}	V	5.5	5.8	6.1	All PRESET values, SW_{10}-B, READ-MODE	(1) V_{DC} input : C voltage = variable; Initial value = 9 V (2) Lower the V_{DC} input voltage and measure the TP10 voltage when the fifth bit from the LSB (in READ mode) changes from 0 to 1.
46	LVP Maximum Output Voltage	V_{H12}	V	4.8	5.0	5.2	All PRESET values, SW_{10}-B	(1) V_{DC} input : DC voltage = 0 V (2) Measure the TP12 voltage.
47	LVP Minimum Output Voltage	V_{L12}	V	0.0	0.8	1.6	All PRESET values, SW_{10}-B	(1) V_{DC} input : DC voltage = 9 V (2) Measure the TP12 voltage.
48	LVP Detection Output Current	I_{L20}	mA	0.43	0.65	0.87	All PRESET values, SW_{10}-B, SW_7-B	(1) V_{DC} input : DC voltage = 4 V (2) Connect an ammeter between TP20 and GND and measure the current.
49	V-GUARD Discrimination Voltage	V_{GRD}	V	5.8	6.0	6.2	All PRESET values, SW_7-B, READ-MODE	(1) V_{DC} input : C voltage = variable; Initial value = 4 V (2) Raise the V_{DC} input voltage and measure the TP7 voltage when the data of the fourth bit from the LSB (when in READ mode) changes from 0 to 1.
50	V-GUARD Detection Output Current	I_{G20}	mA	0.43	0.65	0.87	All PRESET values, SW_7-B	(1) V_{DC} input : voltage = 7 V (1) Connect an ammeter between TP20 and GND and measure the current.
51	V_{ref} Vertical Amplitude Control Ratio	V_r	%	24	30	36	[03] (44) SW_1-B	(1) V_{DC} input : DC voltage = variable; Initial value = 6.2 V (2) Set the data of subaddress [03] to (42). (3) Measure the change in the TP7 amplitude when the DC voltage changes from 6.1 to 6.3V. $V_r = \frac{V(6.1) - V(6.3)}{0.2} \times 100 (\%)$

Note: Unless otherwise specified in the bus data and SW mode column, use PRESET values and SW-A.

No.	CHARACTERISTIC	SYMBOL	UNIT	ELECTRICAL CHARACTERISTICS LIMITS MIN	TYP.	MAX	TEST METHOD (CONDITIONS V_{CC} = 9 V, Ta = 25±3°C) BUS DATA AND SWITCHING MODE [ ] ; SUBADDRESS, ( ) ; DATA	TEST METHOD
52	Self-Diagnosis Vertical Output	—	—	—	Check	—	All PRESET values, all SW-A, READ · MODE	(1) Turn the power on with no input to TP21. (2) Check that in READ mode, the B_2 data = 0. (3) Check that when a trigger pulse is input to TP21, the B_2 data = 1.
53	Self-Diagnosis E / W Output	—	—	—	Check	—	All PRESET values, all SW-A, READ · MODE	Check the B_3 data in the same way as above.
54	Power On Reset Read Detection	—	—	—	Check	—	All PRESET values, all SW-A, READ · MODE	—
55	Blanking Switch Operation Check	—	—	—	Check	—	[0A] (20), all SW-A	(1) Input a trigger pulse to TP21. (2) Measure TP22 when set the data of subaddress [0A] to (20). Check that TP22 outputs no signal.

Note: Unless otherwise specified in the bus data and SW mode column, use PRESET values and SW-A.

TEST CIRCUIT 1

DC characteristics

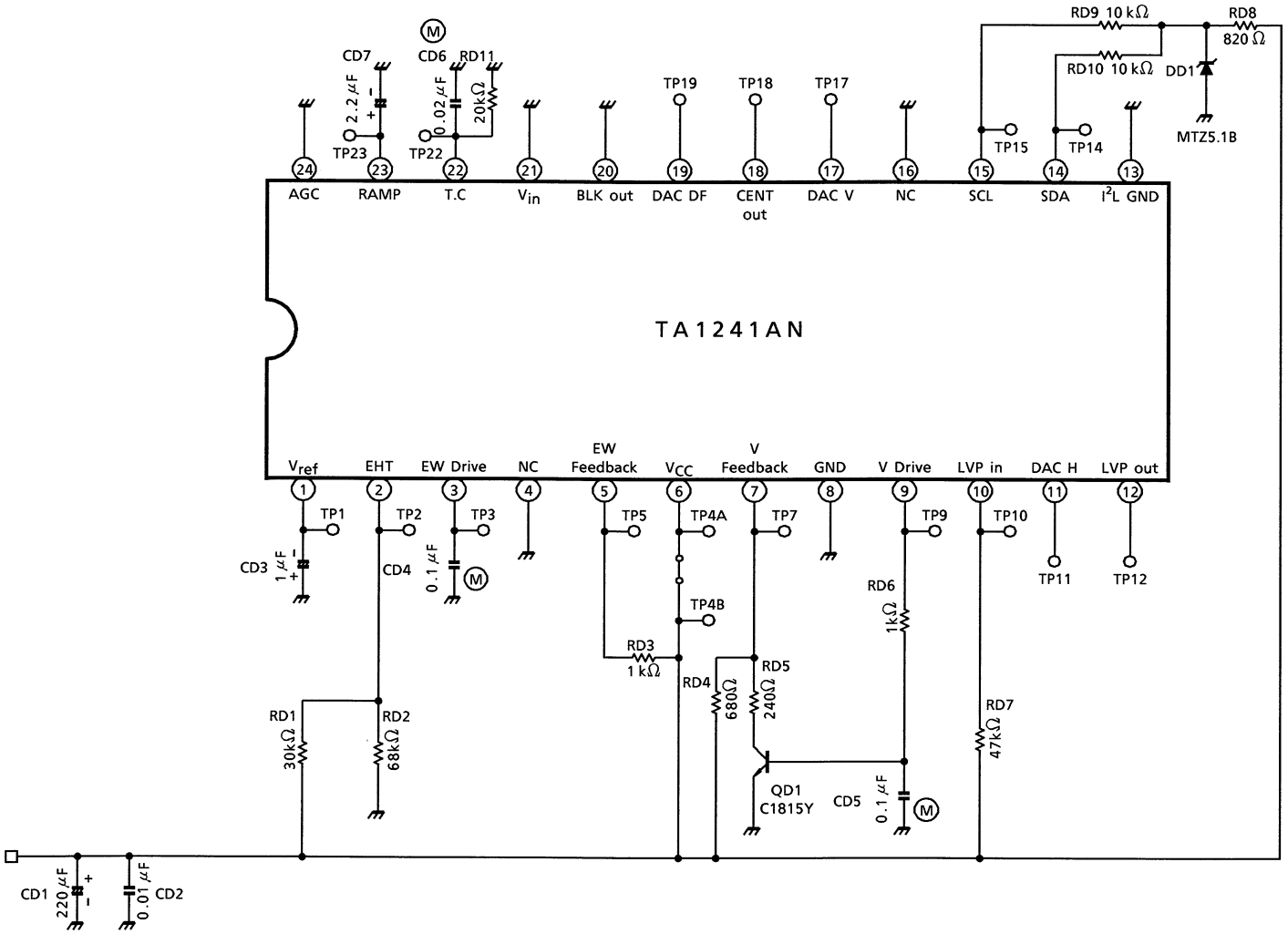

TEST CIRCUIT 2

AC characteristics

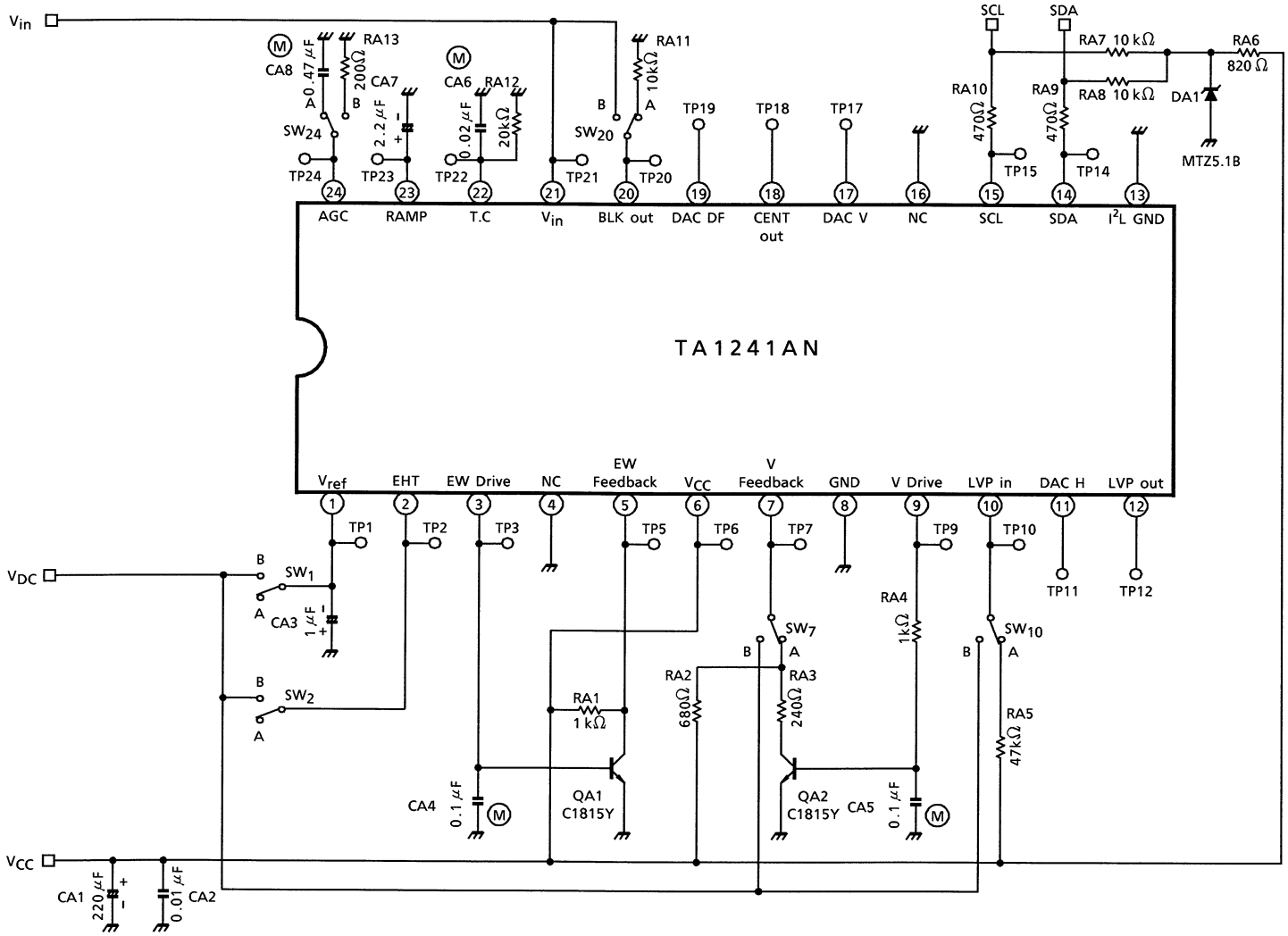

APPLICATION CIRCUIT

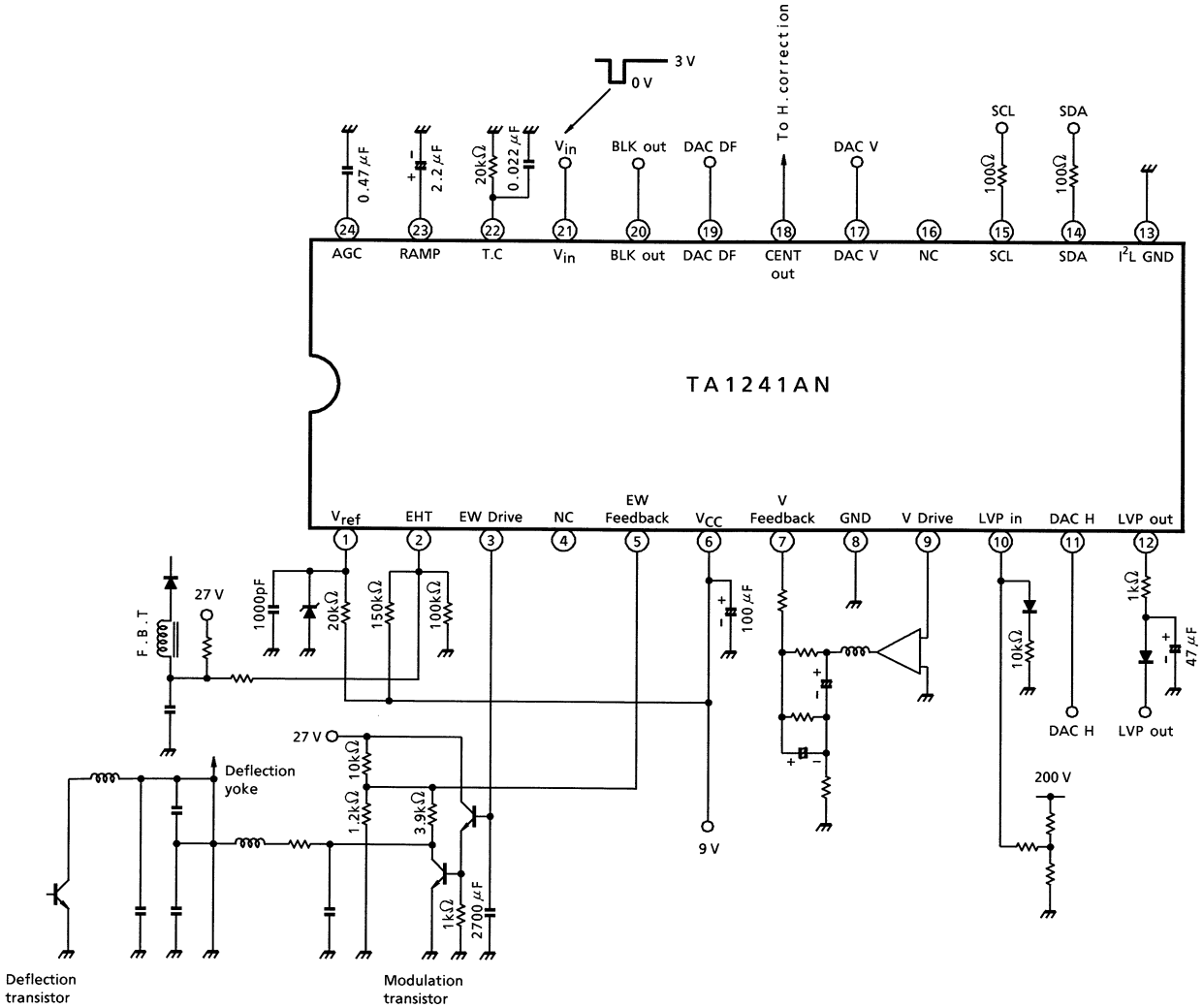

PACKAGE DIMENSIONS

SDIP24-P-300-1.78 Unit : mm

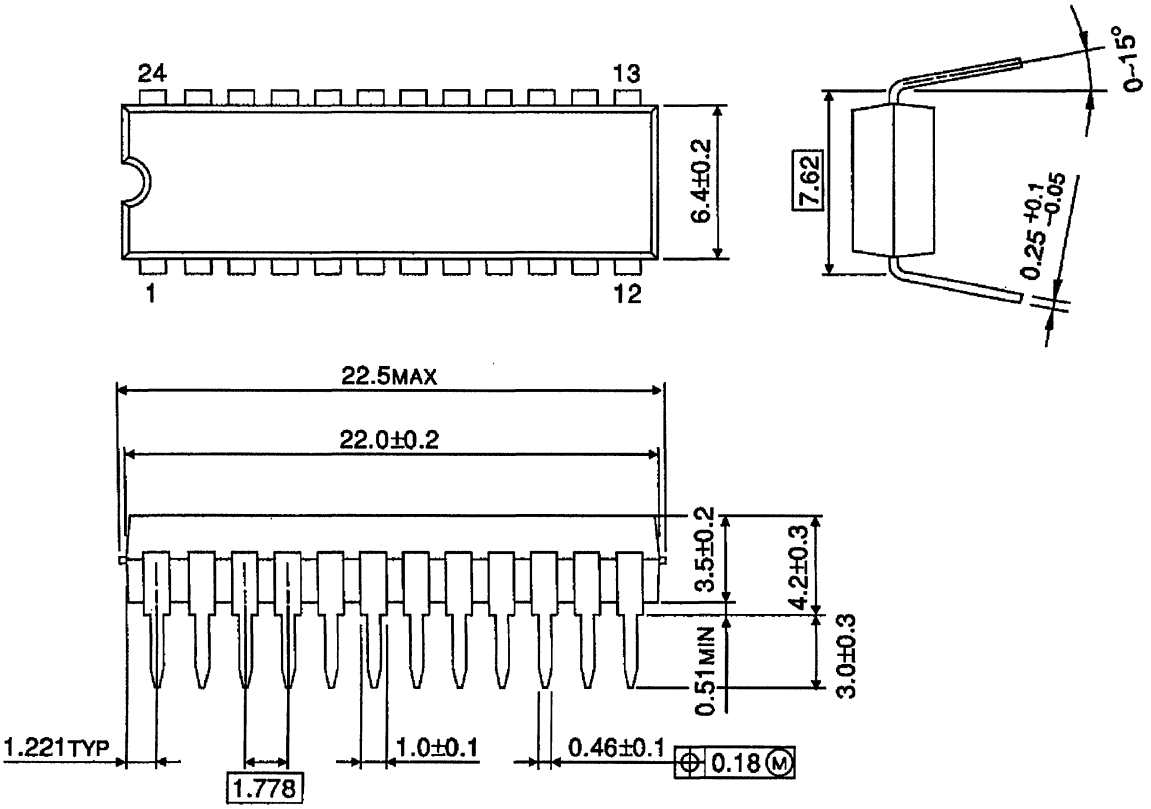

Weight: 1.22g (Typ.)