ANALOG DEVICES

AN-259
APPLICATION NOTE

ONE TECHNOLOGY WAY • P.O. BOX 9106 • NORWOOD, MASSACHUSETTS 02062-9106 • 617/329-4700

AD9617/AD9618 Current Feedback Amplifier Macromodels

by William E. Tolley

Models of electronic circuits which are based on semiconductor process variables and device geometries may have limited usefulness because of their inability to accommodate multiple frequency poles and multiple zeroes. Without this ability, it is difficult to simulate the complexities and subtleties of analog components, although reasonably accurate models of digital components have been available for years.

Macromodels, by contrast, allow designers to simulate high speed op amps and other electronic components by using programs such as SPICE, or its many derivatives. Macromodels use a simplified equivalent circuit and describe the devices within this circuit in terms of their voltages, currents, parameters, and dependencies. By using a macromodel, a designer can investigate an extremely complex component containing dozens of active and passive devices. The macromodel makes this possible by reducing the component to a multiterminal "black box" behavioral model, represented by the netlist, and allows the user to interconnect the component into the final system schematic.

The macromodel listings for the AD9617 and AD9618 current feedback amplifiers included here are based on the equivalent circuits which are shown, and four basic transistor device models. The SPICE user of this macromodel calls up a five-terminal device (LGAMP—low gain amp—for the AD9617 and HGAMP—high gain amp—for the AD9618): model node 1 is IC pin 3 (+ INPUT); node 2 is pin 2 (−INPUT); node 15 is pin 6 (OUTPUT) ; and nodes 100 and 110 are the power rails of pins 7 and 4 ($+V_S$ and $-V_S$), respectively, paralleled with pins 8 and 5 (optional $\pm V_S$ connections). Some macromodels are based on overall specifications or simplified representations of the circuit and may be so oversimplified they ignore how the IC is actually built. The models shown here, however, attempt to reflect the realities of the analog world. As an example, they emulate diodes Q1 and Q2 in the AD9617/AD9618 input stage by using transistors because that is how these diodes are built. In this way, it becomes possible to do accurate simulations of changes in input circuitry and dc performance versus temperature. The graphs which are shown compare measured and modeled open-loop transimpedance magnitude and phase.

Although the macromodels allow accurate assessment of the AD9617 and AD9618 amplifiers in circuits, not all performance features of the amplifiers are included because many of them are considered second-order effects, not necessary for circuit simulation under normal operating conditions. In this way, the model is simplified and reduces computer run-time. Examples where the published models do not correspond to actual performance include:

1. Power supply voltage maximum limits
2. Maximum output voltage range
3. Temperature effects (model parameters assume +25°C)
4. Input voltage and current noise

AD9617 Netlist

```
.SUBCKT LGAMP 1 2 15 100 110
# 1=VIN +, 2=VIN −, 15=VOUT, 100=VCC, 110=VEE
C1 13 5 1.15P
C2 17 6 1.15P
C3 12 2 0.5P
C4 5 6 3.5P
C5 5 0 1.0P
C6 6 0 1.0P
C7 12 0 1.5P
CINN 1 0 1.5P
CINI 2 0 1.5P
F1 100 13 VM1 1.5
F2 17 110 VM2 1.5
GM1 12 9 POLY(2) 0 5 0 6 2.5M, −2.0M, −2.0M
GM2 10 12 POLY(2) 0 6 0 5 2.5M, 2.0M, 2.0M
I1 100 3 DC 1.98M
I2 100 5 DC 3.93M
I3 4 110 DC 2.0M
I4 6 110 DC 4.0M
I5 100 12 5.0M
I6 12 110 5.0M
Q1 3 3 1 110 QNA 1.05
Q2 5 3 2 110 QNA 1.05
Q3 4 4 1 100 QPA 1.05
Q4 6 4 2 100 QPA 1.05
Q5 110 12 13 100 QPA 1.25
Q6A 100 13 14 110 QNB 1.05
Q6B 100 13 14 110 QNB 1.05
Q7 100 12 17 110 QNA 1.05
Q8A 110 17 16 100 QPB
Q8B 110 17 16 100 QPB
R1 12 15 500
R2 14 15 5
R3 15 16 5
R4 100 5 190K
R5 5 0 25K
R6 6 110 395K
R7 6 0 12K
R8 7 20 350
VB1 5 7 DC 1.6
VB2 20 6 DC 1.6
VM1 100 10 DC 0
VM2 9 110 DC 0
*
.MODEL QNA NPN RB=75, IRB=0, RBM=7, RC=20, RE=0.7,
+IS=540E-18, XTB=2.4, BF=380, IKF=15M, VAF=30,
+ISE=22E-16, ISC=35E-21, TF=25P, CJE=16E-14, VJE=1.0,
+CJC=2.2E-13, XCJC=.2, CJS=4E-13, MJS=0.3
*
.MODEL QNB NPN RB=24, IRB=0, RBM=2, RC=6, RE=0.5,
+IS=18E-16, XTB=2, BF=380, IKF=49M, VAF=30,
+ISE=72E-16, ISC=115E-21, TF=25P, CJE=54E-14, VJE=1,
+CJC=6E-13, XCJC=.2, CJS=7E-13, MJS=0.3
*
.MODEL QPA PNP RB=83, IRB=0M, RBM=14, RC=18, RE=0.5,
+IS=26E-17, XTB=2, BF=190, IKF=24M, VAF=15, ISE=7E-15,
+ISC=30E-19, TF=35P, CJE=11E-14, VJE=1, CJC=3.1E-13,
+XCJC=0.2, CJS=9E-13, MJS=0.35,
*
.MODEL QPB PNP RB=25, IRB=0, RBM=4, RC=5, RE=0.2,
+IS=88E-17, XTB=2, BF=190, IKF=84E-3, VAF=15,
+ISE=22.3E-15, ISC=100E-19, TF=35P, CJE=36E-14, VJE=1,
+CJC=8.5E-13, XCJC=0.2, CJS=1.4E-12, MJS=0.35,
*
.ENDS
.END
```

AD9618 Netlist

```
*
VCC 5 0 DC 5 AC 0
VEE 6 0 DC -5 AC 0
V3 2 7 DC 0
RFB 4 2 1000
RFF 1 2 110
RL 4 0 100
*
X1 3 7 4 5 6 HGAMP
* 3=VIN +, 7=VIN −, 4=VOUT, 5=VCC, 6=VEE
*
V1 1 0 DC 0 AC 0
V2 3 0 DC 0 AC 1
*
*
*
.SUBCKT HGAMP 1 2 15 100 110
* 1=VIN +, 2=VIN −, 15=VOUT, 100=VCC, 110=VEE
C1 12 5 .45P
C2 12 6 .45P
C3 12 2 0.2P
C5 5 0 1.25P
C6 6 0 1.25P
C7 12 0 1.25P
CINN 1 0 1.5P
CINN 2 0 1.5P
F1 100 13 VM1 1.2
F2 17 110 VM2 1.2
GM1 12 9 POLY(3) 0 5 0 6 5 6 1.6M,-4.0M, -4.0M
GM2 10 12 POLY(3) 0 6 0 5 6 5 1.6M,4.0M,4.0M
I1 100 3 DC 2.00M
I2 100 5 DC 3.00M
I3 4 110 DC 2.00M
I4 6 110 DC 3.29M
I5 100 12 5.0M
I6 12 110 5.0M
```

```
Q1 3 3 1 110 QNA 1.05
Q2 5 3 2 110 QNA 1.05
Q3 4 4 1 100 QPA 1.05
Q4 6 4 2 100 QPA 1.05
Q5 110 12 13 100 QPA .75
Q6A 100 13 14 110 QNB 1.05
Q6B 100 13 14 110 QNB 1.05
Q7 100 12 17 110 QNA .75
Q8A 110 17 16 100 QPB
Q8B 110 17 16 100 QPB
R1 12 0 20000
R2 14 15 6
R3 15 16 6
R4 100 5 120K
R5 5 5 0 14K
R6 6 110 450K
R7 6 0 4.5K
R8 7 20 280
VB1 5 7 DC 1.70
VB2 20 6 DC 1.70
VM1 100 10 DC 0
VM2 9 110 DC 0
*
.MODEL QNA NPN RB=75, IRB=0, RBM=7, RC=20, RE=0.7,
+IS=540E-18, XTB=2.4, BF=380, IKF=15M, VAF=30,
+ISE=22E-16, ISC=35E-21, TF=25P, CJE=16E-14,
+CJC=2.2E-13, XCJC=.2, +CJS=4E-13, MJS=0.3, VJE=1
*
.MODEL QNB NPN RB=24, IRB=0, RBM=2, RC=6, RE=0.5,
+IS=18E-16, XTB=2, BF=380, IKF=49M, VAF=30, ISE=72E-16,
+ISC=115E-21, TF=25P, CJE=54E-14, CJC=6E-13, XCJC=.2,
+CJS=7E-13, MJS=0.3, VJE=1
*
.MODEL QPA PNP RB=83, IRB=0, RBM=14, RC=18, RE=0.5,
+IS=26E-17, XTB=2, BF=190, IKF=24M, VAF=15, ISE=7E-15,
+ISC=30E-19, TF=35P, CJE=11E-14, CJC=3.1E-13, XCJC=.2,
+CJS=9E-13, MJS=0.35, VJE=1
*
.MODEL QPB PNP RB=25, IRB=0, RBM=4, RC=5, RE=0.2,
+IS=88E-17, XTB=2, BF=190, IKF=84E-3, VAF=15,
+ISE=22.3E-15, ISC=100E-19, TF=35P, CJE=36E-14,
+CJC=8.5E-13, XCJC=.2, +CJS=1.4E-12, MJS=0.35, VJE=1
*
.ENDS
.END
```

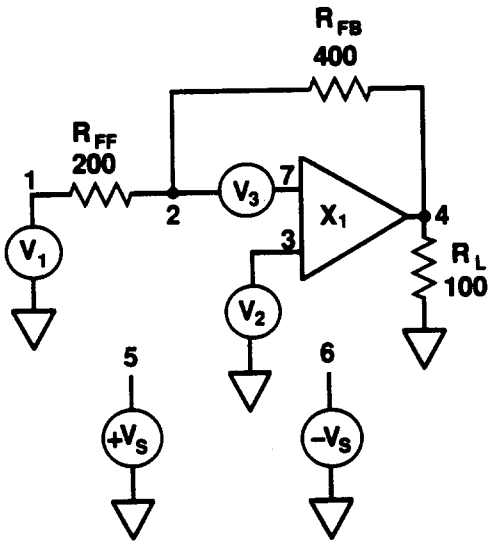

AD9617 and AD9618 Application Circuit

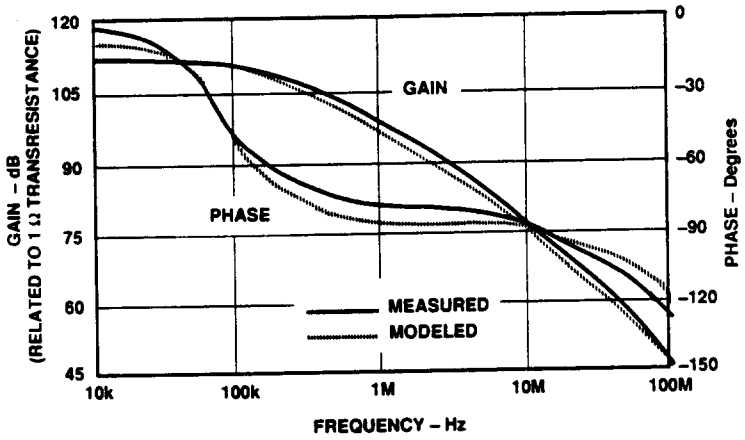

Open-Loop Transimpedance Gain [T (s)] for AD9617

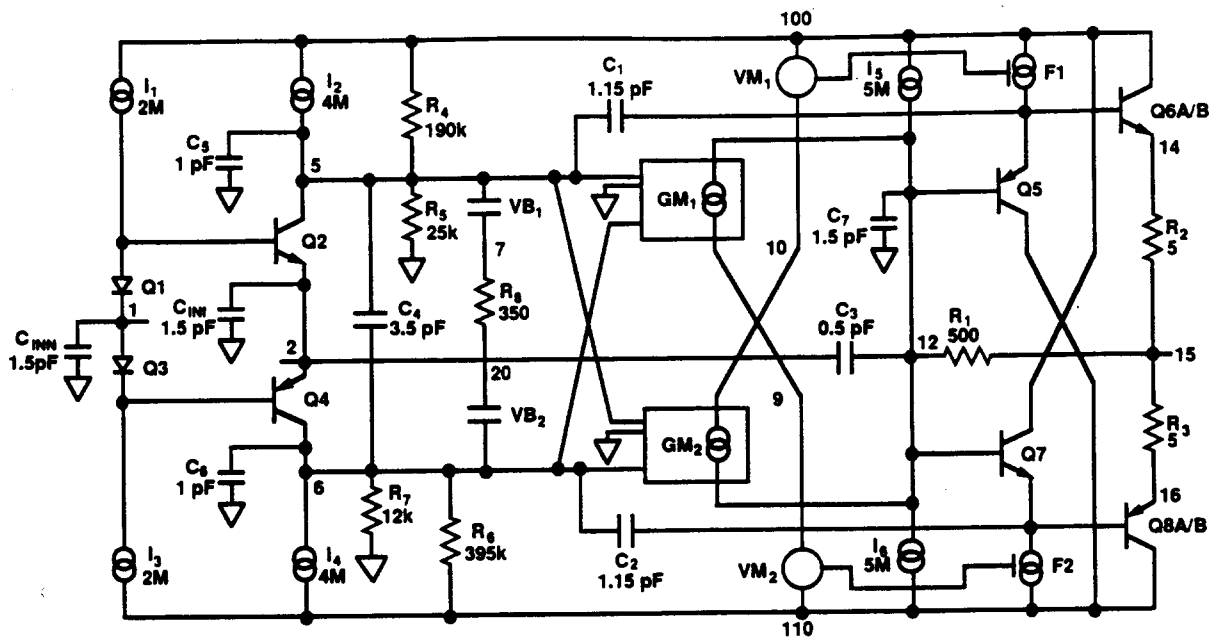

AD9617 Macromodel (LGAMP)

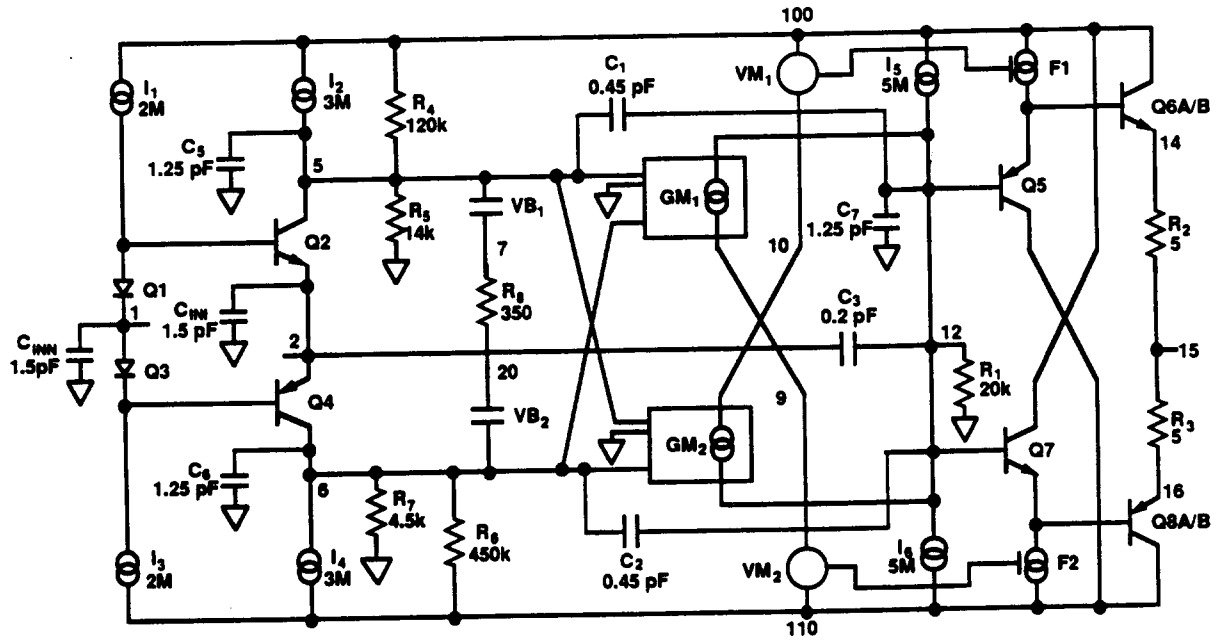

AD9618 Macromodel (HGAMP)