H5N2504DL, H5N2504DS

Silicon N Channel MOS FET
High Speed Power Switching

HITACHI

ADE-208-1375 (Z)
1st. Edition
Mar. 2001

Features

- Low on-resistance
- Low leakage current
- High speed switching
- Low gate charge
- Avalanche ratings

Outline

DPAK-2

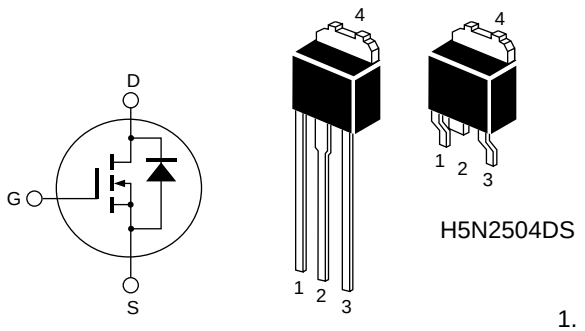

1. Gate
2. Drain
3. Source
4. Drain

Hitachi semiconductor

Absolute Maximum Ratings (Ta = 25°C)

Item	Symbol	Ratings	Unit
Drain to source voltage	V_{DSS}	250	V
Gate to source voltage	V_{GSS}	±20	V
Drain current	I_D	7	A
Drain peak current	$I_{D\ (pulse)}$ Note1	28	A
Body-drain diode reverse drain current	I_{DR}	7	A
Body-drain diode reverse drain peak current	$I_{DR\ (pulse)}$ Note1	28	A
Channel dissipation	Pch Note2	30	W
Channel to case Thermal Impedance	θ ch-c	4.17	°C/W
Channel temperature	Tch	150	°C
Storage temperature	Tstg	–55 to +150	°C

Notes: 1. PW 10 µs, duty cycle 1%
2. Value at Tc = 25°C
3. Tch 150°C

Electrical Characteristics (Ta = 25°C)

Item	Symbol	Min	Typ	Max	Unit	Test conditions
Drain to source breakdown voltage	$V_{(BR)DSS}$	250	—	—	V	I_D = 10 mA, V_{GS} = 0
Gate to source leak current	I_{GSS}	—	—	±0.1	µA	V_{GS} = ±20 V, V_{DS} = 0
Zero gate voltage drain current	I_{DSS}	—	—	1	µA	V_{DS} = 250 V, V_{GS} = 0
Gate to source cutoff voltage	$V_{GS(off)}$	1.0	—	2.5	V	V_{DS} = 10 V, I_D = 1 mA
Static drain to source on state resistance	$R_{DS(on)}$	—	0.48	0.63		I_D = 3.5 A, V_{GS} = 10 V Note4
	$R_{DS(on)}$	—	0.5	0.67		I_D = 3.5 A, V_{GS} = 4 V Note4
Forward transfer admittance	$\|y_{fs}\|$	5	8.5	—	S	I_D = 3.5 A, V_{DS} = 10 V Note4
Input capacitance	Ciss	—	570	—	pF	V_{DS} = 25 V
Output capacitance	Coss	—	60	—	pF	V_{GS} = 0
Reverse transfer capacitance	Crss	—	12	—	pF	f = 1 MHz
Turn-on delay time	td(on)	—	13	—	ns	I_D = 3.5 A
Rise time	tr	—	18	—	ns	V_{GS} = 10 V
Turn-off delay time	td(off)	—	70	—	ns	R_L = 35.7
Fall time	tf	—	8	—	ns	Rg = 10
Total gate charge	Qg	—	21	—	nC	V_{DD} = 200 V
Gate to source charge	Qgs	—	2	—	nC	V_{GS} = 10 V
Gate to drain charge	Qgd	—	6	—	nC	I_D = 7 A
Body-drain diode forward voltage	V_{DF}	—	0.85	1.30	V	I_F = 7 A, V_{GS} = 0
Body-drain diode reverse recovery time	trr	—	120	—	ns	I_F = 7 A, V_{GS} = 0
Body-drain diode reverse recovery charge	Qrr	—	0.48	—	µC	diF/dt = 100 A/µs

Note: 4. Pulse test

Main Characteristics

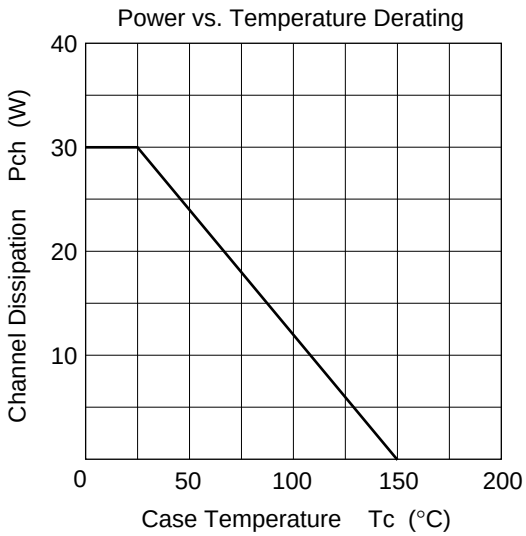

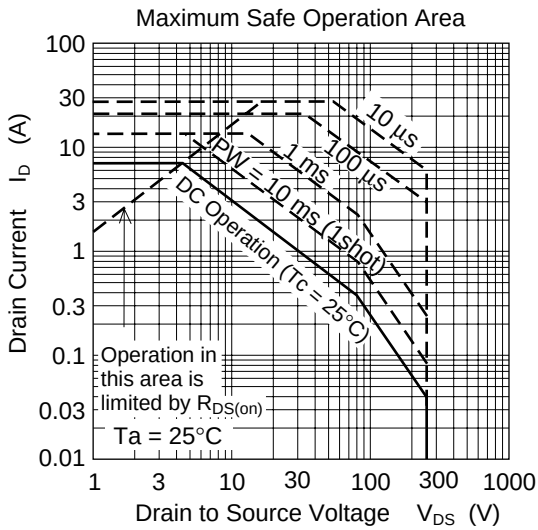

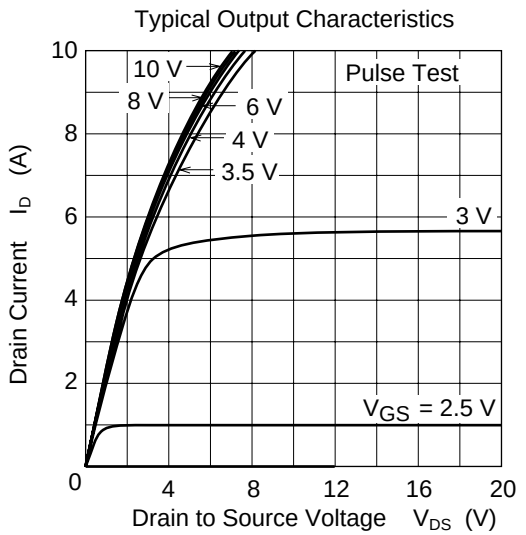

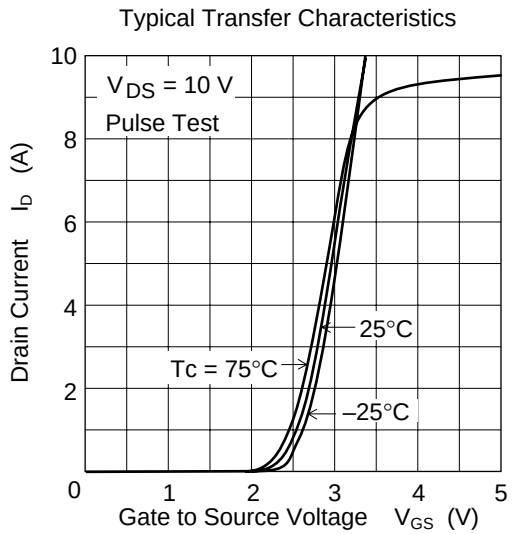

Drain to Source Saturation Voltage vs. Gate to Source Voltage

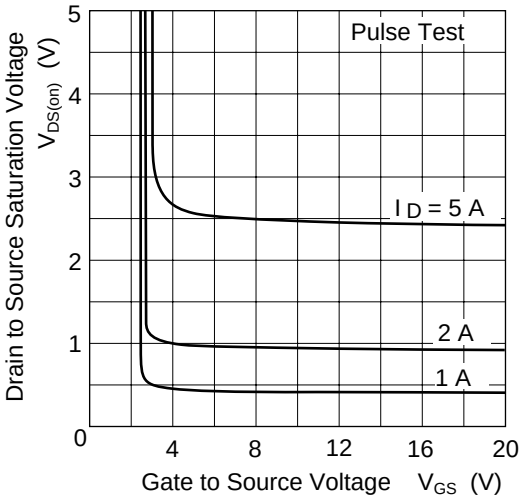

Static Drain to Source on State Resistance vs. Drain Current

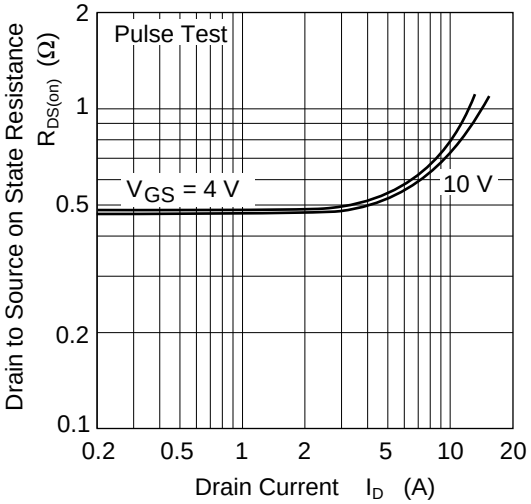

Static Drain to Source on State Resistance vs. Temperature

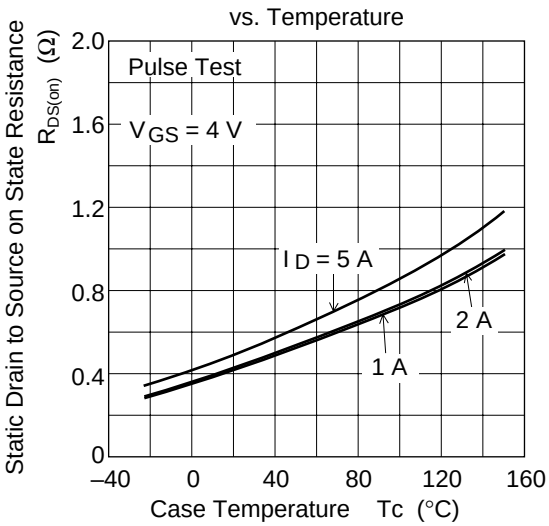

Forward Transfer Admittance vs. Drain Current

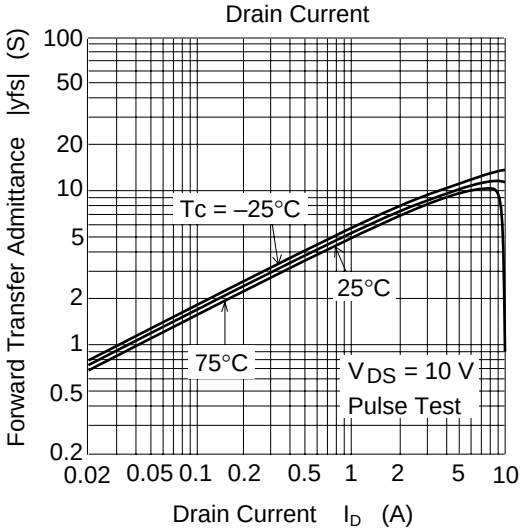

Body-Drain Diode Reverse Recovery Time

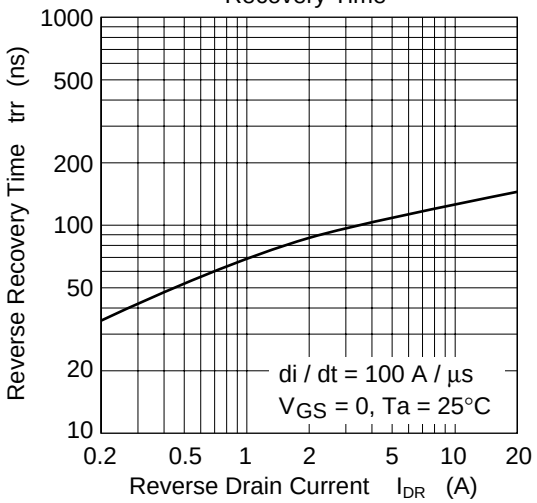

Typical Capacitance vs. Drain to Source Voltage

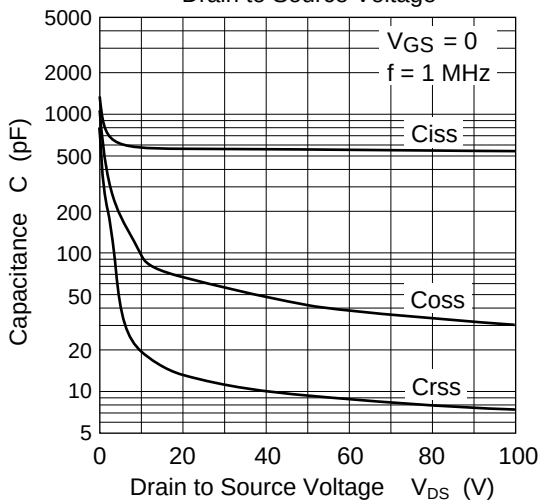

Dynamic Input Characteristics

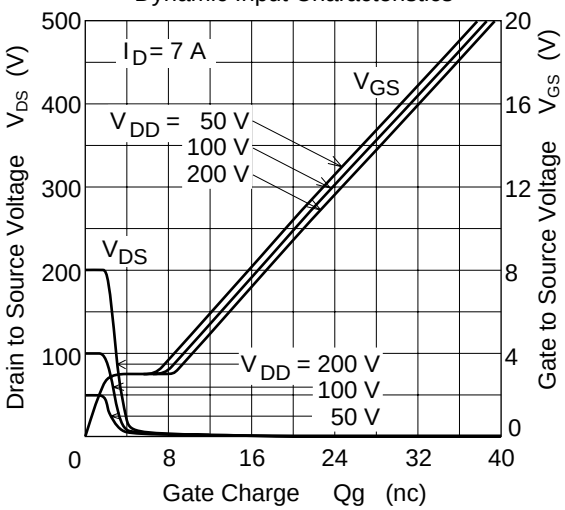

Switching Characteristics

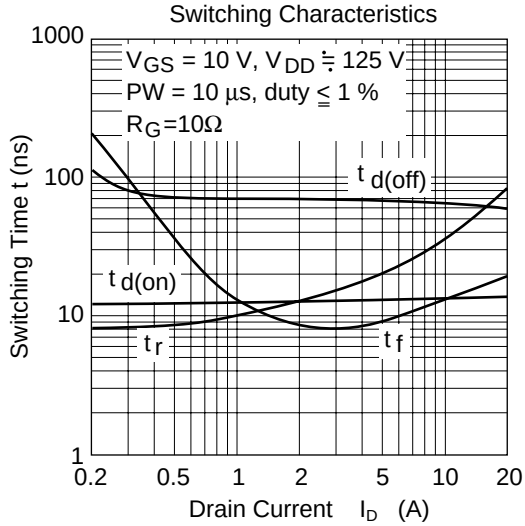

Reverse Drain Current vs.
Source to Drain Voltage

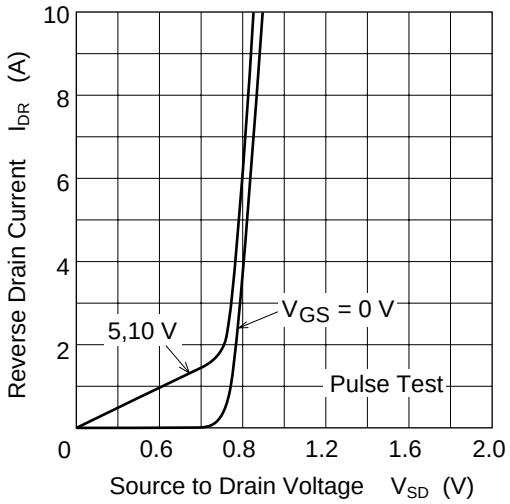

Gate to Source Cutoff Voltage
vs. Temperature

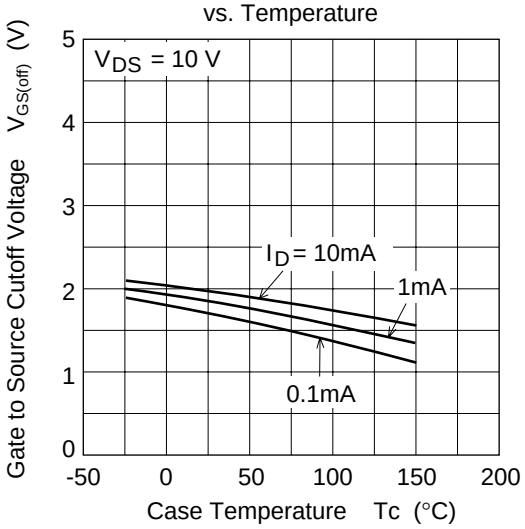

Switching Time Test Circuit

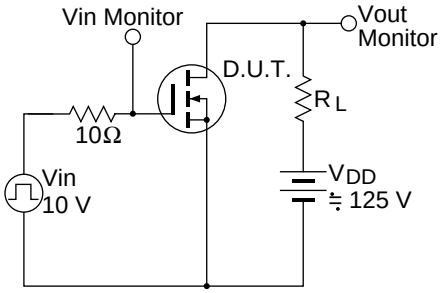

Waveform

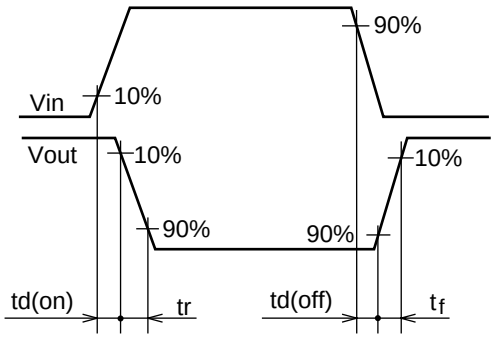

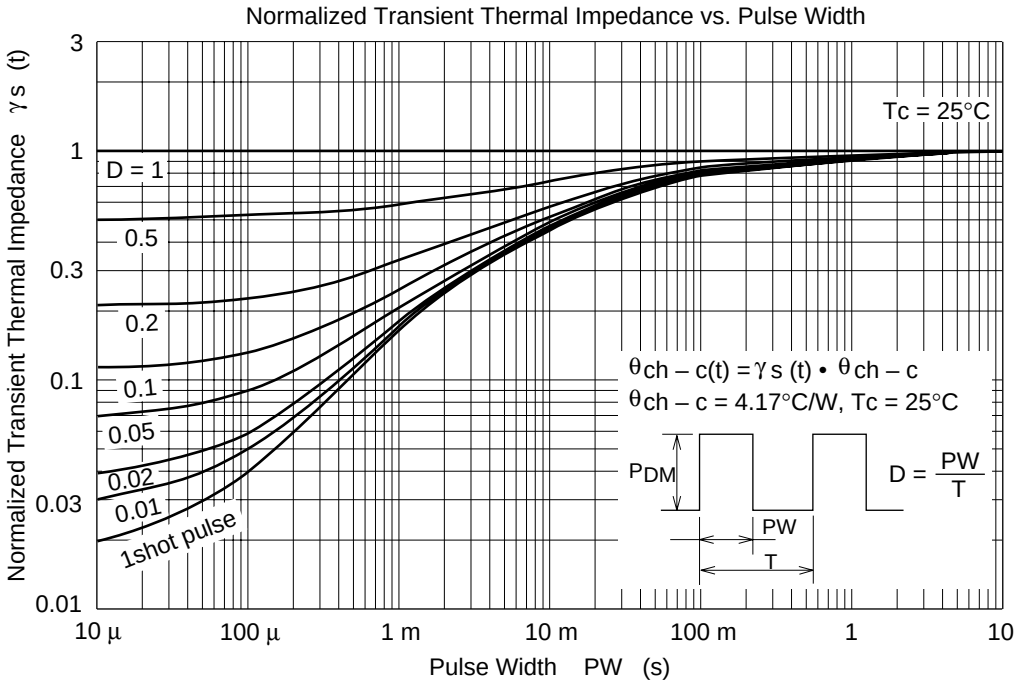
Normalized Transient Thermal Impedance vs. Pulse Width
Normalized Transient Thermal Impedance γs (t)
3
1
0.3
0.1
0.03
0.01
Tc = 25°C
D = 1
0.5
0.2
0.1
0.05
0.02
0.01
1shot pulse
θch – c(t) = γs (t) • θch – c
θch – c = 4.17°C/W, Tc = 25°C
PDM
D = PW/T
PW
T
10 μ
100 μ
1 m
10 m
100 m
1
10
Pulse Width PW (s)

Package Dimensions

As of January, 2001

Unit: mm

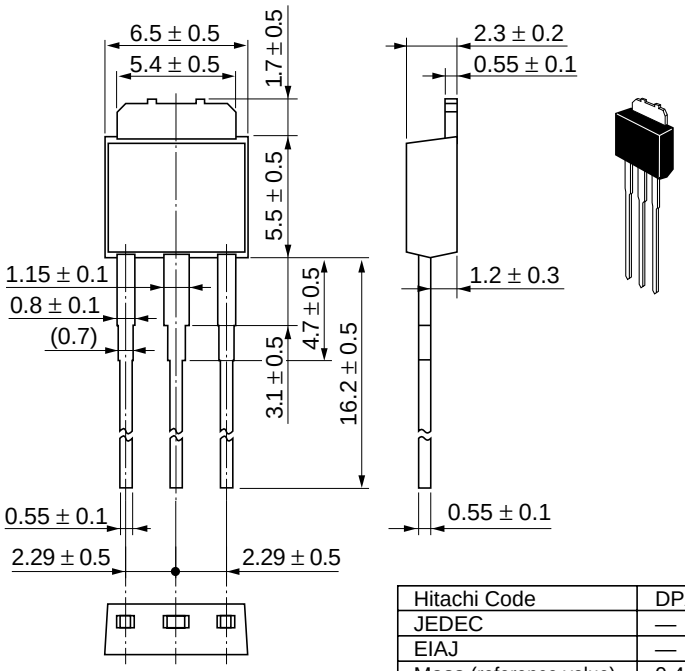

Hitachi Code	DPAK (L)-(2)
JEDEC	—
EIAJ	—
Mass (reference value)	0.42 g

As of January, 2001

Unit: mm

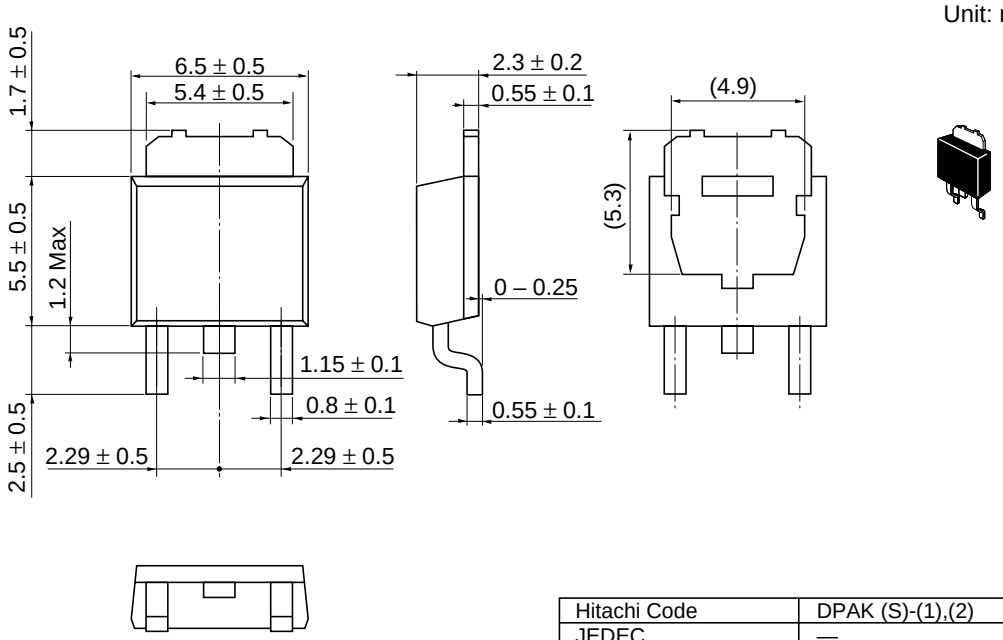

Hitachi Code	DPAK (S)-(1),(2)
JEDEC	—
EIAJ	Conforms
Mass (reference value)	0.28 g

As of January, 2001

Unit: mm

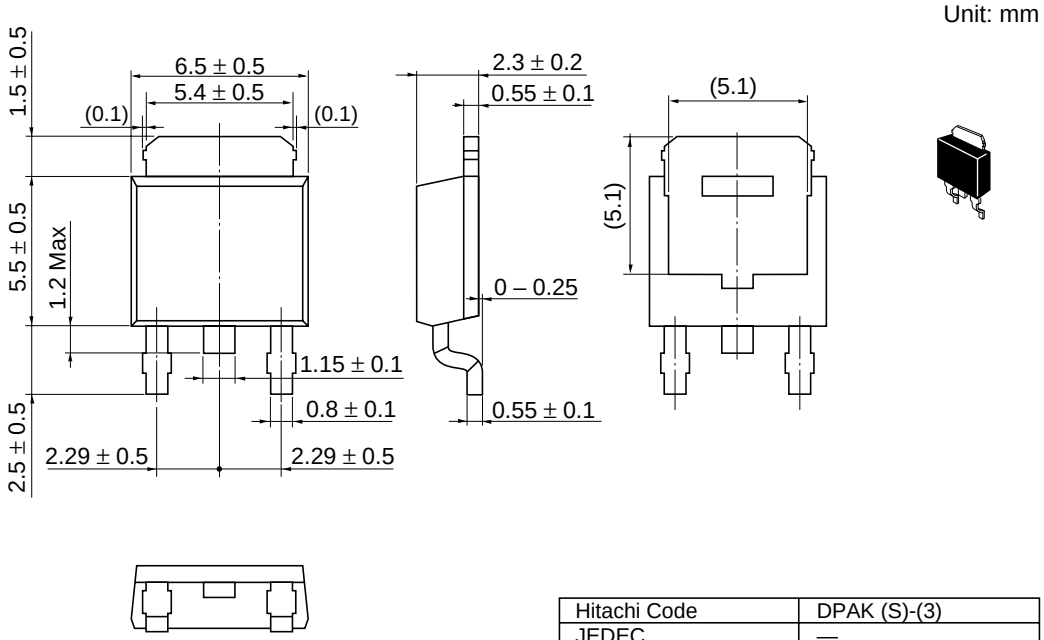

Hitachi Code	DPAK (S)-(3)
JEDEC	—
EIAJ	Conforms
Mass (reference value)	0.28 g

Cautions

1. Hitachi neither warrants nor grants licenses of any rights of Hitachi's or any third party's patent, copyright, trademark, or other intellectual property rights for information contained in this document. Hitachi bears no responsibility for problems that may arise with third party's rights, including intellectual property rights, in connection with use of the information contained in this document.
2. Products and product specifications may be subject to change without notice. Confirm that you have received the latest product standards or specifications before final design, purchase or use.
3. Hitachi makes every attempt to ensure that its products are of high quality and reliability. However, contact Hitachi's sales office before using the product in an application that demands especially high quality and reliability or where its failure or malfunction may directly threaten human life or cause risk of bodily injury, such as aerospace, aeronautics, nuclear power, combustion control, transportation, traffic, safety equipment or medical equipment for life support.
4. Design your application so that the product is used within the ranges guaranteed by Hitachi particularly for maximum rating, operating supply voltage range, heat radiation characteristics, installation conditions and other characteristics. Hitachi bears no responsibility for failure or damage when used beyond the guaranteed ranges. Even within the guaranteed ranges, consider normally foreseeable failure rates or failure modes in semiconductor devices and employ systemic measures such as fail-safes, so that the equipment incorporating Hitachi product does not cause bodily injury, fire or other consequential damage due to operation of the Hitachi product.
5. This product is not designed to be radiation resistant.
6. No one is permitted to reproduce or duplicate, in any form, the whole or part of this document without written approval from Hitachi.
7. Contact Hitachi's sales office for any questions regarding this document or Hitachi semiconductor products.

HITACHI

Hitachi, Ltd.
Semiconductor & Integrated Circuits.
Nippon Bldg., 2-6-2, Ohte-machi, Chiyoda-ku, Tokyo 100-0004, Japan
Tel: Tokyo (03) 3270-2111 Fax: (03) 3270-5109

URL	NorthAmerica	:	http://semiconductor.hitachi.com/
	Europe	:	http://www.hitachi-eu.com/hel/ecg
	Asia	:	http://sicapac.hitachi-asia.com
	Japan	:	http://www.hitachi.co.jp/Sicd/indx.htm

For further information write to:

Hitachi Semiconductor
(America) Inc.
179 East Tasman Drive,
San Jose,CA 95134
Tel: <1> (408) 433-1990
Fax: <1>(408) 433-0223

Hitachi Europe GmbH
Electronic Components Group
Dornacher Straβe 3
D-85622 Feldkirchen, Munich
Germany
Tel: <49> (89) 9 9180-0
Fax: <49> (89) 9 29 30 00

Hitachi Europe Ltd.
Electronic Components Group.
Whitebrook Park
Lower Cookham Road
Maidenhead
Berkshire SL6 8YA, United Kingdom
Tel: <44> (1628) 585000
Fax: <44> (1628) 585160

Hitachi Asia Ltd.
Hitachi Tower
16 Collyer Quay #20-00,
Singapore 049318
Tel : <65>-538-6533/538-8577
Fax : <65>-538-6933/538-3877
URL : http://www.hitachi.com.sg

Hitachi Asia Ltd.
(Taipei Branch Office)
4/F, No. 167, Tun Hwa North Road,
Hung-Kuo Building,
Taipei (105), Taiwan
Tel : <886>-(2)-2718-3666
Fax : <886>-(2)-2718-8180
Telex : 23222 HAS-TP
URL : http://www.hitachi.com.tw

Hitachi Asia (Hong Kong) Ltd.
Group III (Electronic Components)
7/F., North Tower,
World Finance Centre,
Harbour City, Canton Road
Tsim Sha Tsui, Kowloon,
Hong Kong
Tel : <852>-(2)-735-9218
Fax : <852>-(2)-730-0281
URL : http://www.hitachi.com.hk

Colophon 2.0